47

Vol. I.

TRANSCRIPT OF RECORD.

Court of Appeals of the District of Columbia.

OCTOBER TERM, 1913.

60

No. 2583.

COMPTOGRAPH COMPANY, APPELLANT,

vs.

ADDER MACHINE COMPANY.

APPEAL FROM THE SUPREME COURT OF THE DISTRICT OF COLUMBIA.

FILED JULY 24, 1913.

PRINTED SEPTEMBER 19, 1913.

Court of Appeals of the District of Columbia.

OCTOBER TERM, 1913.

No. 2583.

COMPTOGRAPH COMPANY, APPELLANT,

vs.

ADDER MACHINE COMPANY, APPELLEE.

APPEAL FROM THE SUPREME COURT OF THE DISTRICT OF COLUMBIA.

INDEX.

	Original.	Print
Caption	*a*	1
Opinion	1	1
Decree	7	5
Order for appeal	8	5
Memorandum: Appeal bond approved and filed	8	5
Assignment of errors	8	5
Order for citation	11	7
Citation	12	7
Stipulation	13	7
Clerk's certificate	15	8
Stipulation adding printed testimony and proceedings to record	16	9
Index to printed addition, per stipulation	18	11
Stipulation adding printed exhibits to record	1235	1233
Index to printed exhibits, per stipulation	1238	1234

JUDD & DETWEILER (INC.), PRINTERS, WASHINGTON, D. C., AUGUST 13, 1913.

In the Court of Appeals of the District of Columbia.

No. 2583.

COMPTOGRAPH COMPANY, Appellant,
vs.
ADDER MACHINE COMPANY.

a Supreme Court of the District of Columbia.

Equity. No. 29220.

COMPTOGRAPH COMPANY, Plaintiff,
vs.
ADDER MACHINE COMPANY, Defendant.

UNITED STATES OF AMERICA,
District of Columbia, ss:

Be it remembered, That in the Supreme Court of the District of Columbia, at the City of Washington, in said District, at the times hereinafter mentioned, the following papers were filed, and proceedings had, in the above-entitled cause, to wit:

1 *Opinion.*

Filed May 5, 1913.

In the Supreme Court of the District of Columbia.

Equity. No. 29220.

COMPTOGRAPH CO.
vs.
ADDER MACHINE CO.

The plaintiff, Comptograph Co., the present owner, by assignment, of four certain U. S. patents, brings this suit against the defendant, Adder Machine Co., to secure an injunction and accounting by reason of alleged infringement by the defendant of certain claims of said patents. The charge of infringement is that, since the issuance of said patents, the defendant has made, used and sold computing machines embodying the inventions set forth in said patents, and that the defendant threatens to continue such infringement unless restrained by the Court.

Felt Patent 568,020, *Issued Sept.* 22, 1896.

I. The first patent alleged to have been so infringed is Felt patent 568,020, issued Sept. 22, 1896. The defendant's answer denied infringement of this patent, and also denied the validity of claims 3 and 4 thereof which were the claims alleged to have been infringed. Subsequently, however, the plaintiff withdrew the charge of infringement in so far as this patent was concerned (Rec. 68).

II. The next patent alleged to have been infringed by the
2 defendant is Felt patent 568,021, issued Sept. 22, 1896. The charge of the bill is that the defendant infringed claims 21, 35, 46, 47, 48, 49 and 52 of this patent. The defendant's answer denied such infringement and also denied the validity of said claims. Subsequently, the plaintiff abandoned its charge of infringement of this patent, except as to claims 47, 48, 49 and 52 (Plaintiff's brief, p. 160). These claims 47, 48, 49 and 52 relate to a transfer or carrying mechanism. Defendant's experts Magrane and McFarland both testified that these claims are invalid, in view of the prior art, and further that the defendant's computing machines do not infringe said claims. The plaintiff took the testimony of the patentee Felt in its case in chief to support the charge of infringement, but adduced no evidence in rebuttal of the testimony of defendant's experts that said claims were invalid. The weight of the evidence seems to sustain the defendant's position as to this patent, both as to non-infringement and invalidity.

III. The next patent alleged to have been infringed by the defendant is Felt patent 628,176, issued July 4, 1899. The charge of the bill is that the defendant infringed claims 1, 2 and 4 of this patent, relating to a "wide carriage" for accommodating a sheet, as distinguished from a roll of paper, so that the items may be arranged in a plurality of columns, instead of in a single row. The defendant's answer denied such infringement, also denied the validity of said claims, and specifically charged that the subject-matter
3 of said claims was abandoned to the public prior to the filing of Felt's application for said patent.

It appears from the record that Felt's application for this patent was filed May 31, 1898, at which time there was another patent in existence—No. 580,863, applied for Sept. 16, 1896, and issued April 20, 1897, to Hiett and Cable—disclosing descriptively, though not claiming generically, all that is contained in said claims 1, 2 and 4 of the Felt patent. To overcome the effect of this Hiett patent as an anticipation of the subject-matter of the said claims 1, 2 and 4 of the Felt patent, Felt has attempted to show that he completed the invention in 1890 and exhibited to the U. S. Census Office in that year a machine embodying said invention, being eight years prior to the filing of the Felt application for patent and six years prior to the filing of the Hiett application. This showing was held by the Circuit Court of Appeals of the Seventh Circuit in Universal Adding Machine Co. v. Comptograph Co., 146 Fed. 981, not to entitle Felt to the subject-matter of said claims 1, 2 and 4, but, on the contrary, to establish an abandonment thereof by him by reason of the eight

years of inaction following the alleged completion of the invention by him before making application for patent therefor, during which period another party conceived the invention and disclosed it in an application for patent. The Circuit Court of Appeals said:

"The claims relied upon are generic. If sustained they would exclude any other adding machine from using a lateral movement produced by the pressing of a key. * * *

Felt seeks to monopolize in his patent the right to use a lateral movement to bring about the placing of the figures in parallel columns. Assuming that this concept of the patentee was complete when the machine was exhibited to the census office in 1890, so as to be practical and operative, the machine was sufficiently com-
4 pleted to obtain a patent (if the feature was patentable at all) upon the broad feature claimed. The accessories subsequently developed added nothing either to the concept, or to the operativeness of the mechanism embodying the concept. What followed, if anything, was not development or evolution, but improvement merely. And an inventor having grasped an idea, and put it in mechanical form, may not wait to secure a monopoly upon the broad thought until everything in the nature of mere accessory improvement that makes it commercially better has been run out and perfected. To so hold would put it in the power of a patentee to hold back his improvement from the world indefinitely, obtaining in the end a patent that would exclude everything relating to the art, although the whole world had contributed to the perfecting, commercially, of his conception.

One of two things in this case seems to us plain: Either the mechanism of 1890, upon which these broad claims are based, was a mere experiment, inoperative and impracticable, and as such supplanted by the Hiett patent coming some six years later; or else, for the purposes of the broad claims allowed, the mechanism of 1890 was operative and practical, and therefore abandoned or lost through the eight years of inaction that followed. And either view compels us to reverse the decree of the Circuit Court appealed from."

The plaintiff now seeks to avoid the conclusion reached by the Circuit Court of Appeals in that case by claiming that it was based upon "an insufficient record" and also upon "a misrepresentation of the real facts" (Plaintiff's brief, p. 60). The plaintiff contends that in the case at bar a new record is made showing affirmatively that Felt never in any manner abandoned the invention, but, on the contrary, at all times did everything in his power to try to get the same into public use, and that his patent is therefore not invalid because of abandonment of any kind. (Plaintiff's brief, p. 60.)

This whole contention of the plaintiff is based upon a misapprehension of the law and of the decision of the Circuit Court of
5 Appeals. The "inaction" to which that Court referred was the inaction of Felt in the matter of applying for a patent. Not only does the present record not disprove that fact, but it emphasizes it by disclosing that Felt patented every other adding machine improvement devised by him except this one, and he might have included it in any one of the six patents that he took out in the

meantime. The legal conclusion seems to be irresistible that Felt abandoned the patenting of this invention until another had made the invention and secured a patent disclosing the same, in consequence of which he is, in law, treated as having abandoned the invention to the public.

In Kendall v. Winsor, 21 How. 322, the Supreme Court of the United States said:

"It is undeniably true, that the limited and temporary monopoly granted to inventors was never designed for their exclusive profit or advantage: the benefit to the public or community at large was another and doubtless the primary object in granting and securing that monopoly. * * *

It is the unquestionable right of every inventor to confer gratuitously the benefits of his ingenuity upon the public, and this he may do either by express declaration or by conduct equally significant with language—such, for instance, as * * * he may forfeit his rights as an inventor by a wilful or negligent postponement of his claims. * * * until a similar or the same improvement should have been made and introduced by others. Whilst the remuneration of genius and useful ingenuity is a duty incumbent upon the public, the rights and welfare of the community must be fairly dealt with and effectually guarded."

Again in Bates v. Coe, 98 U. S. 31, 46, the Supreme Court said:

"Inventors may, if they can, keep their invention secret; and if they do for any length of time, they do not forfeit their right to apply for a patent, unless another in the meantime has made the invention, and secured by patent the exclusive right to make,
6 use, and vend the patented improvement."

The same principle is recognized by the Court of Appeals of this District in Bechman v. Wood, 15 App. D. C. 484, 501:

"The first applicant was found to be the true first and original inventor of his own special device, and apparently the first inventor of any device of the kind. The second applicant was likewise found to be the true first and original inventor of the special device stated in his application. But, this being the order of invention, the second applicant could not, under any principle of law or any theory of justice, be allowed the broad claim which would have dominated the invention of his predecessor in the field; and neither could that predecessor be allowed the broad claim for the reason that he had not advanced it before the arrival of the other party on the field of invention."

This Court is clearly of the opinion therefore that, as has already been decided by the Circuit Court of Appeals of the Seventh Circuit, claims 1, 2 and 4 of the Felt patent 628,176 are invalid.

IV. The last patent alleged to have been infringed by the defendant is Felt patent 661,121, issued Nov. 6, 1900. The charge of the bill is that the defendant infringed claims 37, 38, 39 and 40 of this patent. The defendant's answer denied such infringement, and also denied the validity of said claims. These claims relate to the construction of printing hammers. Defendant's experts Magrane and McFarland both testified that there is no infringement of these

claims, unless they be read so broadly as to be invalid in view of the prior art. The plaintiff took no evidence in rebuttal, but rested its case upon the deposition of Felt taken in the prima facie
7 proofs, as it also did in connection with Felt patent 568,021 which has already been disposed of. It follows, therefore, that the same conclusion must be reached in connection with this patent, as was reached in connection with Felt patent 568,021, namely, that the defendant cannot be held for infringement. The weight of the evidence sustains the position of the defendant.

For the reasons stated, a decree will be entered dismissing the bill.

THOS. H. ANDERSON, *Justice.*

Decree.

Filed June 23, 1913.

* * * * * * *

This cause having come on to be heard at this term, at final hearing upon pleadings and proofs, and having been argued by counsel, now therefore, upon consideration thereof, it is

Ordered, Adjudged and Decreed that the bill of complaint herein be, and the same is hereby, dismissed; and that the costs be taxed in favor of the defendant under the direction of the Clerk of the Court; and that defendant have judgment and execution therefor against the plaintiff.

Dated, Washington, D. C., June 23d, 1913.

THOS. H. ANDERSON.
Justice of the Supreme Court of the District of Columbia.

Approved as to form:
H. N. LOW,
Solicitor for Plaintiff.

8 *Order for Appeal.*

Filed July 10, 1913.

* * * * * * *

The plaintiff hereby enters an appeal to the Court of Appeals of the District of Columbia from the decree herein filed June 23, 1913.

H. N. LOW,
Attorney for Comptograph Company, Plaintiff.

Memorandum.

July 10, 1913.—Appeal bond approved and filed.

Assignment of Errors.

Filed July 10, 1913.

* * * * * * *

Now comes the said plaintiff, Comptograph Company, by its solicitor and counsel and says that in the decree entered in this court on the — day of ——, 1913, the said Supreme Court of the District of Columbia erred in the following particulars:

1. The Court erred in entering a decree for the defendant.

2. The Court erred in entering a decree dismissing the Bill of Complaint herein for want of equity.

3. The Court erred in not entering a decree for the plaintiff as prayed in the Bill.

4. The Court erred in ordering, adjudging and decreeing that claims 1, 2 and 4 of the Letters Patent 628,176 sued upon, are invalid.

5. The Court erred in not ordering, adjudging and decreeing that claim 1 of said Letters Patent 628,176 is valid and infringed, as charged in the Bill.

6. The Court erred in not ordering, adjudging and decreeing that claim 2 of said Letters Patent 628,176 is valid and infringed, as charged in the Bill.

7. The Court erred in not ordering, adjudging and decreeing that claim 4 of said Letters Patent 628,176 is valid and infringed, as charged in the Bill.

8. The Court erred in not ordering, adjudging and decreeing that the plaintiff have the relief prayed in the Bill, for an injunction and accounting, as to said claims 1, 2 and 4, and each of them, of said Letters Patent 628,176.

9. The Court erred in holding that the invention set forth in said claims 1, 2 and 4 of Letters Patent 628,176, or any of them, had been in any manner abandoned.

10. The Court erred in ordering, adjudging and decreeing that claims 47, 48, 49 and 52 of the Letters Patent 568,021 sued upon, or any of them, were invalid and not infringed.

11. The Court erred in not ordering, adjudging and decreeing that said claims 47, 48, 49 and 52 of the Letters Patent 568,021 sued upon, were valid and infringed as charged in the Bill.

12. The Court erred in not ordering, adjudging and decreeing that the plaintiff have the relief prayed in the Bill, for an injunction and accounting, as to said claims 47, 48, 49 and 52, and each of them, of said Letters Patent 568,021.

13. The Court erred in ordering, adjudging and decreeing that claims 37, 38, 39 and 40 of the Letters Patent 661,121 sued upon, or any of them, were invalid and not infringed.

14. The Court erred in not ordering, adjudging and decreeing that said claims 37, 38, 39 and 40 of the Letters Patent 661,121 sued upon, were valid and infringed as charged in the Bill.

15. The Court erred in not ordering, adjudging and decreeing that the plaintiff have the relief prayed in the Bill, for an injunction and accounting, as to said claims 37, 38, 39 and 40, and each of them, of said Letters Patent 661,121.

16. The Court erred in ordering, adjudging and decreeing that the defendant recover of the plaintiff any costs in this suit.

17. The Court erred in not entering a decree for the plaintiff, for an injunction and accounting and costs against the defendant.

H. N. LOW,
Solicitor for Plaintiff.

HENRY LOVE CLARKE,
Counsel for Plaintiff.

11 *Order for Citation.*

Filed July 11, 1913.

* * * * * * *

The Clerk of said Court will issue citation herein.

H. N. LOW,
Attorney for Plaintiff.

12 In the Supreme Court of the District of Columbia.

No. 29220. In Equity.

COMPTOGRAPH CO.
vs.
ADDER MACHINE CO.

The President of the United States to Adder Machine Company, Greeting:

You are hereby cited and admonished to be and appear as a Court of Appeals of the District of Columbia, upon the docketing the cause therein, under and as directed by the Rules of said Court, pursuant to an Appeal noted in the Supreme Court of the District of Columbia, on the 10″ day of July, 1913, wherein the Comptograph Company is Appellant, and you are Appellee, to show cause, if any there be, why the Decree rendered against the said Appellant, should not be corrected, and why speedy justice should not be done to the parties in that behalf.

Witness the Honorable Harry M. Clabaugh, Chief Justice of the Supreme Court of the District of Columbia, this 11″ day of July in the year of our Lord one thousand nine hundred and thirteen.

[Seal Supreme Court of the District of Columbia.]

J. R. YOUNG, *Cl'k,*
By F. E. CUNNINGHAM,
Ass't Clerk.

Service of the above Citation accepted this 11 day of July, 1913.

CHURCH & CHURCH,
Attorneys for Appellee.

[Endorsed:] No. 29220. Equity. Comptograph Co. vs. Adder Mach. Co. Citation. Issued July 11″, 1913.

13 *Stipulation.*

Filed July 10, 1913.

* * * * * * *

It is hereby stipulated by and between the parties to the appeal herein to the Court of Appeals of the District of Columbia, entered by the plaintiff, that the following parts of the original proceedings herein shall constitute the transcript on appeal:

1. The printed record containing the Pleadings and Proofs of both parties, heretofore filed herein and used at the trial of this cause; it is stipulated and agreed that the Clerk need not compare this printed record with the original proceedings; and that, a copy of said printed record having already been filed in this Court with the Clerk thereof, the accompanying other copy of it shall be filed direct with the Clerk of the Court of Appeals of the District of Columbia, as a compliance with paragraph 2*b*, of Rule V of said Court of Appeals, in lieu of any manuscript copies of the pleadings, proofs and other papers contained in said printed copy, and in lieu of any statement of evidence or condensed or narrative form of evidence; and that 25 additional printed copies of said record shall be filed by the appellant with the Clerk of the Court of Appeals to be embodied in the printed record for that Court. The said printed record comprises two volumes, one of 1203 pages containing pleadings, testimony, stipulations and some exhibits, and one of patents, exhibits herein, both volumes being entitled in this cause.

14 2. The opinion of Mr. Justice Anderson, filed May 5, 1913.

3. The final decree.

4. The order for appeal and citation.

5. The citation.

5½. The assignment of errors.

6. This stipulation.

H. N. LOW,
Solicitor for Plaintiff.
CHURCH & CHURCH,
Solicitors for Defendant.

May 24, 1913.

15 Supreme Court of the District of Columbia.

UNITED STATES OF AMERICA,
District of Columbia, ss:

I, John R. Young, Clerk of the Supreme Court of the District of Columbia, hereby certify the foregoing pages numbered from 1 to 14, both inclusive, to be a true and correct transcript of the record, according to directions of counsel herein filed, copy of which is made part of this transcript, in cause No. 29220 in Equity, wherein Comptograph Company is Plaintiff, and Adder Machine Company is Defendant, as the same remains upon the files and of record in said Court.

In testimony whereof, I hereunto subscribe my name and affix the seal of said Court, at the City of Washington, in said District, this 22nd day of July, 1913.

[Seal Supreme Court of the District of Columbia.]

JOHN R. YOUNG, *Clerk.*

Endorsed on cover: District of Columbia Supreme Court. No. 2583. Comptograph Company, appellant, vs. Adder Machine Company. Court of Appeals, District of Columbia. Filed Jul- 24, 1913. Henry W. Hodges, clerk.

16 In the Court of Appeals of the District of Columbia.

No. 2583.

COMPTOGRAPH COMPANY, Appellant,
vs.
ADDER MACHINE COMPANY, Appellee.

Stipulation.

It is hereby stipulated by and between the parties to this cause that the attached volume of testimony is the first of the two volumes forming a part of the record to be embodied in the printed record for the Court of Appeals of the District of Columbia, on the appeal of Comptograph Company, Plaintiff below, as provided in the stipulation between the parties filed July 10, 1913.

H. N. LOW,
Solicitor for the Appellant.
CHURCH & CHURCH,
Solicitors for the Appellee.

July 24, 1913.

Court of Appeals, District of Columbia. Filed Jul- 24, 1913. Henry W. Hodges, Clerk.

IN THE

SUPREME COURT

—OF THE—

DISTRICT OF COLUMBIA.

No. 29220.

COMPTOGRAPH CO., *Plaintiff,*

vs.

ADDER MACHINE CO., *Defendant.*

} IN EQUITY.

RECORD.

MUNDAY, EVARTS, ADCOCK & CLARKE,
COUNSEL FOR PLAINTIFF.

KERR, PAGE, COOPER & HAYWARD,
COUNSEL FOR DEFENDANT.

BARNARD & MILLER PRINT, CHICAGO.

H. N. Low,

Solicitor for Plaintiff.

Church & Church.

Solicitors for Defendant

INDEX OF RECORD.

PAGE

Bill of Complaint 1–19
Answer 21–51
Amendment to Answer 414
Replication 52
Stipulation as to Record from Massachusetts Suit. 53–54
Stipulation as to Record from Burroughs Suit 55-56, 1200, 1201

Plaintiff's Prima Facie Testimony.

Deposition of Harry B. Wyeth (from Massachusetts Suit) 59
Direct examination 59
Cross-examination 66
Deposition of Dorr E. Felt (from Massachusetts Suit) 67
Direct examination 67
Cross-examination 124

Defendant's Testimony.

Deposition of Charles N. McFarland (from Massachusetts Suit) 133
Direct examination 133
Cross-examination 223
Deposition of Robert Magrane 278
Direct examination 278
Cross-examination 317
Re-direct examination 330

PAGE

Deposition of Arthur S. Browne 338
Direct examination 338
Cross-examination 384
Re-direct examination 409
Re-cross examination 411
Re-re-direct examination 411
Re-re-cross examination 412

Deposition of Edward Rector (from Burroughs Suit) 416
Direct examination 416
Cross-examination 428
Re-direct examination 474
Re-cross examination 474

Deposition of Emil P. Wenger (from Burroughs Suit) 475
Direct examination 475
Cross-examination 489
Re-direct examination 499

Deposition of John H. Wyeth (from Burroughs Suit) 500
Direct examination 500
Cross-examination 511
Re-direct examination 520
Re-cross examination 523

Deposition of Edmund G. Langhorne (from Burroughs Suit) 524
Direct examination 524
Cross-examination 552
Re-direct examination 562
Re-cross examination 565

Deposition of John T. Langhorne (from Burroughs Suit) 567
Direct examination 567
Cross-examination 573

PAGE

Deposition of Alfred J. Doughty (from Burroughs Suit) 577
Direct examination 577
Cross-examination 587
Re-direct examination 615
Re-cross examination 622

Deposition of James S. Walker (from Burroughs Suit) 624
Direct examination 624
Cross-examination 630

Deposition of Edward S. Leonard (from Burroughs Suit) 637
Direct examination 637
Cross-examination 643

Deposition of Albert S. Hermann (from Burroughs Suit) 644
Direct examination 644

Deposition (Second) of Harry B. Wyeth (from Burroughs Suit) 723
Direct examination 723

Plaintiff's Rebuttal Testimony.

Deposition of Joseph A. B. Turck 798–824
Direct examination 798

Deposition (Third) of Harry B. Wyeth (from Burroughs Suit) 826
Direct examination 826
Cross-examination 857
Re-direct examination 937
Re-cross examination 940

Deposition of H. L. Clarke (from Burroughs Suit) . 942
Direct examination 942
Cross-examination 946

PAGE

Deposition (Fourth) of Harry B. Wyeth (from Burroughs Suit) 959
Direct examination 959

Deposition (Second) of Dorr E. Felt (from Burroughs Suit) 967
Direct examination 967
Cross-examination 1000
Re-direct examination 1079
Re-cross examination 1105
Re-re-direct examination 1162

Deposition of Kurt F. Ziehm (from Burroughs Suit) 1166
Direct examination 1166
Cross-examination 1169
Re-direct examination 1172

Deposition (Fifth) of Harry B. Wyeth (from Burroughs Suit) 1185
Direct examination 1185
Cross-examination 1194
Re-direct examination 1194

Deposition of Charles J. DeBerard (from Burroughs Suit) 1195
Direct examination 1195
Cross-examination 1199

Stipulations in Plaintiff's Record.

As to Taking of Testimony 57
As to Use of Printed Copies of Patents 57
As to Custody of Exhibits 58
As to Corporate Character of Both Parties 58
As to Title of Plaintiff to Patents Sued Upon 58
As to Record of Testimony and Exhibits from Burroughs Suit 1200–1201
As to Physical Exhibits from Burroughs Suit 1201

17

Stipulations in Defendant's Record.

PAGE

As to Copies of Patents Referred to by Witnesses Magrane and Browne 413
As to Exhibit of "Remington No. 2 Typewriting Machine" 413
As to Testimony of Alexander W. Shanks, Chester T. Fezzey, George B. Craft, Frank Halle, John F. Calef, Edmund G. Langhorne and Emil P. Wenger 652–655
As to Express Receipt for Machine No. 1540..... 653
As to Bauman Contract 653
As to Printing and Costs of Record.....1203

Plaintiff's Patent Exhibits.

Felt Patent 568020 Sued Upon (See book of Patent Exhibits). . . ..
Felt Patent 568021 Sued Upon (See book of Patent Exhibits). . . ..
Felt Patent 628176 Sued Upon (See book of Patent Exhibits). . . ..
Felt Patent 661121 Sued Upon (See book of Patent Exhibits). . . ..
Felt Patent 465255 (See book of Patent Exhibits)..1165
Felt Patent 578919 (See book of Patent Exhibits)..1165
Felt Patent 590972 (See book of Patent Exhibits)..1165
Felt Patent 441233 (See book of Patent Exhibits)..1165
Felt Patent 644287 (See book of Patent Exhibits)..1165
Felt Patent 694955 (See book of Patent Exhibits)..1165
Felt Patent 960528 (See book of Patent Exhibits).. 824
Turck Patent 679348 (See book of Patent Exhibits). 824
Turck Patent 720086 (See book of Patent Exhibits). 824
Pottin Patent 312014 (See book of Patent Exhibits).1189
Burroughs Patent 504963 (See book of Patent Exhibits 1190

PAGE

Burroughs Patent 505078 (See book of Patent Exhibits) 1190

Plaintiff's Other Paper Exhibits.

"Defendant's Circular" 59
"Invoice of Defendant's Machine"..... 61
"Advertisement of Defendant" 62
"Adder Machine Company's Advertisement"..... 832
"Complainant's Reply Brief" in Universal case.... 842
"Opinion of Circuit Court of Appeals" in Universal case 843
"Notice of Revocation of License" to Burroughs Co. 848
Pleading (Amendment to Answer) in Universal case 953
Correspondence of Edward Rector 960
Newspaper Clipping on Decision in Universal case.961-2
Circular on Decision in Universal case..... 962
Copy of Letter Proposed by Burroughs Co..... 964
Postal Card of Burroughs Co..... 966
"Prospectus" of Wide Carriage Machine..... 984
"Chicago Tribune" on 1890 Machine..... 984
"Eaton Letter" 1098
"Dean Letter" 1100
"Letter to Munday, Evarts & Adcock".....1102
"Felt & Tarrant's Shipping Book of 1894".....1104
"Sample of Present Work on 1890 Machine".....1142
"Felt & Tarrant's Pamphlet" 1174
"Felt & Tarrant's Circular".....1175-1177
"Drawings of 1890 Machine" 1178
Letter of Rector to American Arithmometer Co....1179
"Pike Letter to Langhorne" 1180
"Burroughs Advertisement in Magazine of February '08" 1189
"Burroughs Descriptive Pamphlet" 1189

19

Plaintiff's Physical Exhibits.

	PAGE
"Defendant's Machine"	61
"Roll Paper Comptograph"	974
"Felt's 1890 Model"	978

Defendant's Patent and Paper Exhibits.

(For Copies of Patent Offered by Defendant, See book of Patent Exhibits.)	
Abstract of File Wrapper of Felt Patent 568021 Sued Upon	748
File Wrapper of Felt Patent 628176 Sued Upon	752-796
"Cut 1" (By McFarland)	142
"Cut 2" (By McFarland)	143
"Cut 3" (By McFarland)	154-244
"Cut 4" (By McFarland)	164
"Cut 5" (By McFarland)	165
"Cut 6" (By McFarland)	178
"Cut 7" (By McFarland)	179, 264
"Cut 8" (By McFarlnad)	179, 294
"Cut 9" (By McFarland)	180, 263
"Cut 10" (By McFarland)	181
"Cut 11" (By McFarland)	181
"Cut 12" (By McFarland)	191
"Cut 13" (By McFarland)	191
"Cut 14" (By McFarland)	197, 245, 265
"Cut 15" (By McFarland)	200, 266
"Fig. 1" (By Magrane)	288, 311
"Fig. 2" (By Magrane)	289, 312
"Fig. 3" (By Magrane)	290, 313
"Fig. 4" (By Magrane)	291-314
"Fig. 5" (By Magrane)	292, 315
"Rector-Pike Correspondence"	419-427
Letters "A", "B", "C", "D", "E", "F", "G", "H", "I", "K", "L", "M", "N"	442-451

PAGE

"Machine Record Journal" 477, 478, 479, 483
"Shipping Order Book" 477
"Shipping Order No. 933"..... 478
"Shipping Order No. 842" 479
"Shipping Order No. 2444" 480
"Shipping Order No. 929" 480
"Shipping Order of Machine No. 1951"..... 481
Sales Record Book, Machine No. 1549..... 481
Sales Record Book, Machine No. 1540..... 482
Sales Record Book, Machine No. 1575..... 482
Sales Record Book, Machine No. 1951..... 483
Shipping Order Books 1, 2, 3 and 4..... 483
Sales Record Book 483
Sale Record Book No. 2..... 489
"Wyeth Letters" 511, 657
"Copy of Burroughs Decision Book".....513-517
"Manny Letters" 532, 690
"Cannon-Langhorne Letters" 532-693
"Cahill Letter" 533, 695
"St. Louis Trust Company Invoice".....535, 696
"Wells Letters" 537, 697
"Machine Record of Burroughs No. 3 Machines".. 549
"Langhorne Letter" 573
"St. Louis Trust Company Voucher and Bills".... 628
"St. Louis Orders and Receipts" 641
"Receiving Ticket" 645
"Rebuilding Order of Machine No. 1540"..... 647
"Express Company Receipt, Machine No. 1540"... 649
Location Slip, Machine No. 1540..... 649
"Bauman Contract, Machine No. 1540"..... 649
"Manny Telegram" 703
"Langhorne Memorandum" 704
"Langhorne Letter" 704
"Boyer Machine Company's Letter"..... 706
"Boyer Machine Company's List of English Tools". 709

PAGE

"Boyer Machine Company's Bill"..... 722
"H. B. Wyeth's Correspondence"..... 725
"Comptograph Brief" 1079
DeBerard Correspondence (Letters "A" to "G")..1156

Defendant's Physical Exhibits.

"Comptograph Machine" 222-223
"Defendant's Narrow Roll Machine"..... 339
"Remington No. 2 Typewriting Machine"..... 411

IN THE SUPREME COURT

OF THE

DISTRICT OF COLUMBIA.

No. 29,220.

COMPTOGRAPH COMPANY,
Plaintiff,
vs.
ADDER MACHINE COMPANY,
Defendant.
} IN EQUITY.

RECORD.

BILL OF COMPLAINT.

Bill of Complaint.

To the Honorable, the Judges of the Supreme Court of the District of Columbia.

The Comptograph Company, a corporation created and existing under and by virtue of the laws of the State of Illinois, having its principal office at Chicago, in said state, brings this its bill of complaint against the Adder Machine Company, a corporation created and existing under and by virtue of the laws of the State of Pennsylvania, and having its principal office at Wilkesbarre, in the State of Pennsylvania, and having also an office at the City of Washington, in said District of Columbia; and thereupon your orator complains and says:

I.

Bill of Complaint.

That the defendant, the Adder Machine Company, has committed acts of infringement upon the Letters Patent hereinafter mentioned, and each of them, as hereinafter charged, in the said District of Columbia, and has a regular and established place of business at the City of Washington, in the said District of Columbia.

II.

That heretofore, and before the 10th day of September, A. D. 1894, one Dorr E. Felt, of Chicago, Illinois, was the true and first inventor of a certain new and useful improvement in computing machines, fully described in Letters Patent No. 568,020 hereinafter mentioned, and which had not been known or used by others in this country before his invention thereof and had not been patented or described in any printed publication in this or any foreign country before his said invention thereof, or more than two years prior to his hereinafter recited application for said patent thereof, and not in public use or on sale in this country for more than two years prior to his said application, and which had not been abandoned or proved to have been abandoned, and upon which no application for a foreign patent was filed more than seven months prior to the filing of the application in the United States.

And your orator further shows that the said Dorr E. Felt being as aforesaid the inventor of the said improvement, and being a citizen of the United States, made application in due form to the Commissioner of Patents for Letters Patent upon said invention, in accordance with the then existing act of Congress; and after due proceedings in all respects according to law, Letters Patent

Bill of Complaint.

of the United States, numbered 568,020, and dated September 22, 1896, signed by the Secretary of the Interior and countersigned by the Commissioner of Patents, were issued under the seal of the Patent Office and delivered unto said Dorr E. Felt, whereby there was granted unto said Dorr E. Felt, and to his heirs and assigns for a term of seventeen years from the date of the same, the exclusive right to make, use and vend the said invention throughout the United States and the territories thereof, as will more fully appear by said patent, or a copy of the same duly certified from the records of the United States Patent Office, and in this court to be produced, and your orator attaches hereto a copy of the specifications and drawings of said Letters Patent and marks the same Exhibit "B."

Your orator further shows that on or about the 2d day of October, A. D. 1896, the said Dorr E. Felt, by an instrument in writing bearing that date, and fully recorded in the United States Patent Office on the 5th day of October, A. D. 1896, assigned said Letters Patent, together with the inventions therein described, and all rights of action and claims thereunder existing at the date of said assignment, unto the Felt & Tarrant Manufacturing Company, a corporation created and existing under and by virtue of the laws of the State of Illinois, having its place of business at Chicago, in said state. And that on or about the 12th day of May, A. D. 1902, the said Felt & Tarrant Manufacturing Company, by an instrument in writing bearing that date, and duly recorded in the Patent Office of the United States on the 22d day of May, 1902, assigned said Letters Patent, together with the invention therein set forth, and also all claims and demands, both in law and equity, arising from or growing out of or accruing by reason of infringements theretofore committed upon said Letters Patent, whether

Bill of Complaint.

such claims or demands be for damages, or profits, or for both damages and profits, with full power to sue for and collect the same, unto your orator, whereby your orator, prior to the commencement of this suit, on or about the 12th day of May, A. D. 1902, became, and now is, the sole owner of said Letters Patent, and of all rights of action of every kind and nature thereunder, as in and by said assignment or certified copies thereof in court to be produced will more fully and certainly appear.

Your orator further shows unto your Honors that by virtue of the premises it became and now is the sole and exclusive owner of said Letters Patent, and of the inventions and improvements therein described, and all the rights and privileges granted and secured or intended to be granted and secured thereby. And that since it became the owner thereof as aforesaid, it has invested and expended large sums of money and has been to great labor and exertion in and about said inventions, and for the purpose of carrying on the business of manufacturing and selling computing machines containing the said inventions, and making the same profitable to itself and useful to the public; and that the said inventions have been and are of great benefit and advantage to the public and of great value to your orator; and that large numbers of computing machines containing the said inventions have been made and sold by your orator and your orator's grantor, the Felt & Tarrant Manufacturing Company, to the great advantage of the public; and that the public have generally acquiesced in and acknowledged the validity of said Letters Patent and have, previous to the commencement of the infringement hereinafter complained of, by this defendant, respected the same; and your orator believes that it will realize and receive large gains and profits therefrom, if infringement by said defendants and their confederates shall be prevented.

Bill of Complaint.

And your orator further shows unto your Honors that all the machines made and sold by it and by its grantor, the Felt & Tarrant Manufacturing Company, containing the subject matter of said Letters Patent, have been marked as patented on said September 22, 1896, as required by law.

Yet the said defendant, well knowing the premises and the rights secured to your orator as aforesaid, and confederating together with its predecessor in business, The Adder Machine Company, a corporation organized under the laws of the State of New Jersey and having its principal office at said Wilkesbarre, and with the Burroughs Adding Machine Company, a corporation of the State of Michigan, largely engaged in the manufacture of adding machines at Detroit, in said state, and also with others to your orator unknown, but contriving to injure your orator, and deprive it of the benefits and advantages which might and otherwise would accrue unto it from said inventions after the issue of the said Letters Patent as aforesaid, and both before and since your orator became the owner thereof, and before the commencement of this suit, did, as your orator is informed and believes and therefore avers, without the license or allowance and against the will of your orator, and in violation of its rights and in infringement of said Letters Patent, within the District of Columbia, and elsewhere in the United States, unlawfully and wrongfully, and in defiance of the rights of your orator, made, construct, use and vend to others to be used, computing machines made according to and employing the improvements forming the subject matter of claims 3 and 4 of said Letters Patent, and thereby the defendant has infringed upon said Letters Patent and still continues so to do, and is threatening to continue making and selling the aforesaid infringing computing machines containing the said improvements.

III.

Bill of Complaint.

That heretofore, and before the 14th day of June, A. D. 1895, one Dorr E. Felt, of Chicago, Illinois, was the true and first inventor of a certain new and useful improvement in Printing and Calculating Machines, fully described in the Letters Patent No. 568,021 hereinafter mentioned, and which had not been known or used by others in this country before his invention thereof and had not been patented or described in any printed publication in this or any foreign country before his said invention thereof, or more than two years prior to his hereinafter recited application for said patent therefor, and not in public use or on sale in this country for more than two years prior to his said application, and which had not been abandoned or proved to have been abandoned, and upon which no application for a foreign patent was filed more than seven months prior to the filing of the application in the United States.

And your orator further shows that the said Dorr E. Felt being as aforesaid the inventor of the said improvement, and being a citizen of the United States, made application in due form to the Commissioner of Patents for Letters Patent upon said invention in accordance with the then existing act of Congress; and after due proceedings in all respects according to law, Letters Patent of the United States, numbered 568,021, and dated September 22, 1896, signed by the Secretary of the Interior and countersigned by the Commissioner of Patents, were issued under the seal of the Patent Office and delivered unto said Dorr E. Felt, whereby there was granted unto said Dorr E. Felt and to his heirs and assigns for a term of seventeen years from the date of the same, the exclusive right to make, use and vend the said invention throughout the United States and the territories thereof,

as will more fully appear by said patent, or a copy of the same duly certified from the records of the United States Patent Office, and in this court to be produced, and your orator attaches hereto a copy of the specification and drawings of said Letters Patent and marks the same Exhibit "C." Bill of Complaint.

Your orator further shows that on or about the 2d day of October, A. D. 1896, the said Dorr E. Felt, by an instrument in writing bearing that date, and fully recorded in the United States Patent Office on the 5th day of October, A. D. 1896, assigned said Letters Patent, together with the inventions therein described, and all rights of action and claims thereunder existing at the date of said assignment, unto the Felt & Tarrant Manufacturing Company, a corporation created and existing under and by virtue of the laws of the State of Illinois, having its place of business at Chicago, in said state. And that on or about the 12th day of May, A. D. 1902, the said Felt & Tarrant Manufacturing Company, by an instrument in writing bearing that date, and duly recorded in the Patent Office of the United States on the 22d day of May, 1902, assigned said Letters Patent, together with the invention therein set forth, and also all claims and demands, both in law and equity, arising from or growing out of or accruing by reason of infringements theretofore committed upon said Letters Patent, whether such claims or demands be for damages, or profits, or for both damages and profits, with full power to sue for and collect the same, unto your orator, whereby your orator, prior to the commencement of this suit, on or about the 12th day of May, A. D. 1902, became, and now is, the sole owner of said Letters Patent, and of all rights of action of every kind and nature thereunder, as in and by said assignment or certified copies thereof here in court to be produced will more fully and certainly appear.

Bill of Complaint.

Your orator further shows unto your Honors that, by virtue of the premises, it became and now is the sole and exclusive owner of said Letters Patent, and of the inventions and improvements therein described, and all the rights and privileges granted and secured or intended to be granted and secured thereby. And that since it became the owner thereof as aforesaid, it has invested and expended large sums of money and has been to great labor and exertion in and about said inventions, and for the purpose of carrying on the business of manufacturing and selling computing machines containing the said inventions, and making the same profitable to itself and useful to the public; and that the said inventions have been and are of great benefit and advantage to the public and of great value to your orator; and that large numbers of computing machines containing the said inventions have been made and sold by your orator and your orator's grantor, the Felt & Tarrant Manufacturing Company, to the great advantage of the public; and that the public have generally acquiesced in and acknowledged the validity of said Letters Patent and have, previous to the commencement of the infringement hereinafter complained of, by this defendant, respected the same; and your orator believes that it will realize and receive large gains and profits therefrom, if infringement by said defendants and their confederates shall be prevented.

And your orator further shows unto your Honors that all the machines made and sold by it and by its grantor, the Felt & Tarrant Manufacturing Company, containing the subject matter of said Letters Patent, have been marked as patented on said September 22, 1896, as required by law.

Yet the defendant, well knowing the premises and the rights secured to your orator, as aforesaid, and confederating together with its predecessor in business, The

Bill of Complaint.

Adder Machine Company, a corporation organized under the laws of the State of New Jersey and having its principal office at said Wilkesbarre, and with the Burroughs Adding Machine Company, a corporation of the State of Michigan, largely engaged in the manufacture of adding machines at Detroit, in said state, and also with others to your orator unknown, but contriving to injure your orator, and deprive it of the benefits and advantages which might and otherwise would accrue unto it from said inventions after the issue of the said Letters Patent as aforesaid, and both before and since your orator became the owner thereof, and before the commencement of this suit, did, as your orator is informed and believes and therefore avers, without the license or allowance and against the will of your orator, and in violation of its rights and in infringement of said Letters Patent, within the District of Columbia, and elsewhere in the United States, unlawfully and wrongfully, and in defiance of the rights of your orator, make, construct, use and vend to others to be used, computing machines made according to and employing the improvements forming the subject matter of claims 21, 35, 46, 47, 48, 49 and 52 of said Letters Patent, and thereby the defendant has infringed upon said Letters Patent and still continues so to do, and is threatening to continue making and selling the aforesaid infringing computing machines containing the said improvements.

IV.

That heretofore and before the 31st day of May, A. D. 1898, one Dorr E. Felt, of Chicago, Illinois, was the true and first inventor of a certain new and useful improvement in Tabulating Machines, fully described in the Letters Patent No. 628,178, hereinafter mentioned, and which had not been known or used by others in this coun-

Bill of Complaint.

try before his invention thereof and had not been patented or described in any printed publication in this or any foreign country before his said invention thereof, or more than two years prior to his hereinafter recited application for said patent therefor, and not in public use or on sale in this country for more than two years prior to his said application, and which had not been abandoned or proved to have been abandoned, and upon which no application for a foreign patent was filed more than seven months prior to the filing of the application in the United States.

And your orator further shows that the said Dorr E. Felt being as aforesaid the inventor of the said improvement, and being a citizen of the United States, made application in due form to the Commissioner of Patents for Letters Patent upon said invention, in accordance with the then existing act of Congress; and after due proceedings in all respects according to law, Letters Patent of the United States, numbered 628,176, and dated July 4, 1899, signed by the Secrtary of the Interior and countersigned by the Commissioner of Patents, were issued under the seal of the Patent Office and delivered unto said Dorr E. Felt, whereby there was granted unto said Dorr E. Felt and to his heirs and assigns, for a term of seventeen years from the date of the same, the exclusive right to make, use and vend the said invention throughout the United States and the territories thereof, as will more fully appear by said patent, or a copy of the same duly certified from the records of the United States Patent Office, and in this court to be produced, and your orator attaches hereto a copy of the specification and drawings of said Letters Patent and marks the same Exhibit "D."

Your orator further shows that on or about the 10th day of July, A. D. 1899, the said Dorr E. Felt, by an in-

strument in writing bearing that date, and fully recorded in the United States Patent Office, on the 19th day of July, A. D. 1899, assigned said Letters Patent, together with the inventions therein described, and all rights of action and claims thereunder existing at the date of said assignment, unto the Felt & Tarrant Manufacturing Company, a corporation created and existing under and by virtue of the laws of the State of Illinois, having its place of business at Chicago in said state. And that on or about the 12th day of May, A. D. 1902, the said Felt & Tarrant Manufacturing Company by an instrument in writing bearing that date, and duly recorded in the Patent Office of the United States on the 22d day of May, 1902, assigned said Letters Patent, together with the invention therein set forth, and also all claims and demands, both in law and equity, arising from or growing out of or accruing by reason of infringements heretofore committed upon said Letters Patent, whether such claims or demands be for damages, or profits, or for both damages and profits, with full power to sue for and collect the same, unto your orator, whereby your orator, prior to the commencement of this suit, on or about the 12th day of May, A. D. 1902, became, and now is, the sole owner of said Letters Patent, and all of rights of action of every kind and nature thereunder, as in and by said assignment or certified copies thereof here in court to be produced will more fully and certainly appear. Bill of Complaint.

Your orator further shows unto your Honors that by virtue of the premises, it became and now is the sole and exclusive owner of said Letters Patent, and of the inventions and improvements therein described, and all the rights and privileges granted and secured or intended to be granted and secured thereby. And that since it became the owner thereof as aforesaid it has invested and expended large sums of money and has been to great

Bill of Complaint.

labor and exertion in and about said inventions, and for the purpose of carrying on the business of manufacturing and selling computing machines containing the said inventions, and making the same profitable to itself and useful to the public; and that the said inventions have been and are of great benefit and advantage to the public and of great value to your orator; and that large numbers of computing machines containing the said inventions have been made and sold by your orator and your orator's grantor, the Felt & Tarrant Manufacturing Company, to the great advantage of the public; and that the public have generally acquiesced in and acknowledged the validity of said Letters Patent and have, previous to the commencement of the infringement hereinafter complained of, by this defendant, respected the same; and your orator believes that it will realize large gains and profits therefrom, if infringement by said defendants and their confederates shall be prevented.

And your orator further shows unto your Honors that all the machines made and sold by it and by its grantor, the Felt & Tarrant Manufacturing Company, containing the subject matter of said Letters Patent, have been marked as patented on said July 4, 1899, as required by law.

Yet the said defendant, well knowing the premises and the rights secured to your orator as aforesaid, and confederating together with its predecessor in business. The Adder Machine Company, a corporation organized under the laws of the State of New Jersey and having its principal office at said Wilkesbarre, and with the Burrough Adding Machine Company, a corporation of the State of Michigan, largely engaged in the manufacture of adding machines at Detroit, in said state, and also with others to your orator unknown, but contriving to injure your orator, and deprive it of the benefits and

Bill of Complaint.

advantages which might and otherwise would accrue unto it from said inventions after the issue of the said Letters Patent as aforesaid, and both before and since your orator became the owner thereof, and before the commencement of this suit, did, as your orator is informed and believes and therefore avers, without the license or allowance and against the will of your orator, and in violation of its rights and in infringement of said Letters Patent, within the District of Columbia and elsewhere in the United States, unlawfully and wrongfully, and in defiance of the rights of your orator, make, construct, use and vend to others to be used, computing machines made according to and employing the improvements forming the subject matter of claims 1, 2 and 4 of said Letters Patent, and thereby the defendant has infringed upon said Letters Patent and still continues so to do, and is threatening to continue making and selling the aforesaid infringing computing machines continuing the said improvements.

V.

That heretofore, and before the 2d day of May, A. D. 1898, one Dorr E. Felt, of Chicago, Illinois, was the true and first inventor of a certain new and useful improvement in Calculating Machines, fully described in the Letters Patent No. 661,121, hereinafter mentioned, and which had not been known or used by others in this country before his invention thereof and had not been patented or described in any printed publication in this or any foreign country before his said invention thereof, or more than two years prior to his hereinafter recited application for said patent therefor, and not in public use or on sale in this country for more than two years prior to his said application, and which had not been abandoned or proved to have been abandoned, and upon which

Bill of Complaint.

no application for a foreign patent was filed more than seven months prior to the filing of the application in the United States.

And your orator further shows that the said Dorr E. Felt being as aforesaid the inventor of the said improvement, and being a citizen of the United States, made application in due form to the Commissioner of Patents for Letters Patent upon said invention in accordance with the then existing act of Congress; and after due proceedings in all respects according to law, Letters Patent of the United States, numbered 661,121, and dated November 6, 1900, signed by the Secretary of the Interior and countersigned by the Commissioner of Patents, were issued under the seal of the Patent Office, and delivered unto said Dorr E. Felt, whereby there was granted unto said Dorr E. Felt and to his heirs and assigns for a term of seventeen years from the date of the same, the exclusive right to make, use and vend the said invention throughout the United States and the territories thereof, as will more fully appear by said patent, or a copy of the same duly certified from the records of the United States Patent Office, and in this court to be produced, and your orator attaches hereto a copy of the specification and drawings of said Letters Patent and marks the same Exhibit "E."

Your orator further shows that on or about the 8th day of November, A. D. 1900, the said Dorr E. Felt, by an instrument in writing bearing that date, and fully recorded in the United States Patent Office on the 10th day of November, 1900, assigned said Letters Patent, together with the inventions therein described, and all rights of action and claims thereunder existing at the date of said assignment, unto the Felt & Tarrant Manufacturing Company, a corporation created and existing under and by virtue of the laws of the State of Illinois,

Bill of Complaint.

having its place of business at Chicago in said state. And that on or about the 12th day of May, A. D. 1902, the said Felt & Tarrant Manufacturing Company, by an instrument in writing bearing that date, and duly recorded in the Patent Office of the United States on the 22d day of May, 1902, assigned said Letters Patent, together with the invention therein set forth, and also all claims and demands, both in law and equity, arising from or growing out of or accruing by reason of infringement theretofore committed upon said Letters Patent, whether such claims or demands be for damages, or profits, or for both damages and profits, with full power to sue for and collect the same, unto your orator, whereby your orator, prior to the commencement of this suit, on or about said 12th day of May, A. D. 1902, became, and now is, the sole owner of said Letters Patent, and of all rights of action of every kind and nature thereunder, as in and by said assignment or certified copies thereof here in court to be produced will more fully and certainly appear.

Your orator further shows unto your Honors that, by virtue of the premises, it became and now is the sole and exclusive owner of said Letters Patent, and of the inventions and improvements therein described, and all rights and privileges granted and secured or intended to be granted and secured thereby. And that since it became the owner thereof as aforesaid it has invested and expended large sums of money and has been to great labor and exertion in and about said inventions, and for the purpose of carrying on the business of manufacturing and selling computing machines containing the said inventions, and making the same profitable to itself and useful to the public; and that the said inventions have been and are of great benefit and advantage to the public and of great value to your orator; and that large numbers of computing machines containing the said inven-

Bill of Complaint.

tions have been made and sold by your orator and by your orator's grantor, the Felt & Tarrant Manufacturing Company, to the great advantage of the public; and that the public have generally acquiesced in and acknowledged the validity of said Letters Patent and have, previous to the commencement of the infringement hereinafter complained of, by this defendant, respected the same; and your orator believes that it will realize and receive large gains and profits therefrom, if infringement by said defendants and their confederates shall be prevented.

And your orator further shows unto your Honors that all the machines made and sold by it and by its grantor, the Felt & Tarrant Manufacturing Company, containing the subject matter of said Letters Patent, have been marked as patented on said November 6, 1900, as required by law.

Yet the said defendant, well knowing the premises and the rights secured to your orator as aforesaid, and confederating together with its predecessor in business, The Adder Machine Company, a corporation organized under the laws of the State of New Jersey and having its principal office at said Wilkesbarre, and with the Burroughs Adding Machine Company, a corporation of the State of Michigan, largely engaged in the manufacture of adding machines at Detroit, in said state, and also with others to your orator unknown, but contriving to injure your orator, and deprive it of the benefits and advantages which might and otherwise would accrue unto it from said inventions after the issue of the said Letters Patent as aforesaid, and both before and since your orator became the owner thereof, and before the commencement of this suit, did, as your orator is informed and believes and therefore avers, without the license or allowance and against the will of your orator, and in vio-

lation of its rights and in infringement of said Letters Patent, within the District of Columbia and elsewhere in the United States, unlawfully and wrongfully, and in defiance of the rights of your orator, make, construct, use and vend to others to be used, computing machines made according to and employing the improvements forming the subject-matter of claims 37, 38, 39 and 40 of said Letters Patent, and thereby the defendant has infringed upon said Letters Patent and still continues so to do, and is threatening to continue making and selling the aforesaid infringing computing machines containing the said improvements. Bill of Complaint.

VI.

All in defiance of the rights acquired by and accrued to your orator as aforesaid, and to its great and irreparable loss and injury; and your orator has been and still is being deprived of great gains and profits, which it might and otherwise would have obtained, and which have been received and enjoyed and are being received and enjoyed by the defendant by and through its unlawful acts and doings.

And your orator further shows unto your Honors that all of the inventions and improvements hereinabove mentioned are capable of conjoint use in a single machine, and that all of them have been so conjointly used in each infringing machine herein complained of.

And your orator further shows unto your Honors, on information and belief, that said defendant has sold a large number of computing machines containing the improvements set forth in each and all of said Letters Patent, as above charged, and is continuing to build and is offering for sale computing machines containing said improvements claimed in each of said Letters Patent, and

Bill of Complaint.

has made and realized large profits and advantages therefrom, but to what extent and exactly how much your orator does not know, and therefore prays a discovery thereof. And your orator further shows that the use of said improvements by said defendants, and their preparations for and avowed determination to continue the same, and their other aforesaid unlawful acts in disregard and defiance of the rights of your orator, have the effect to and do encourage others to venture to infringe said patents in disregard of your orator's rights.

And your orator further shows that it has caused notice to be given to said defendant of said infringement, and of the rights of your orator in the premises, and has requested said defendant to desist and refrain therefrom; but the said defendant has disregarded such notice and refuses to desist from said infringement, and still continues to make and sell the infringing computing machines.

And forasmuch as your orator can have no adequate relief except in this court, and to the end, therefore, that the defendant may, if it can, show why your orator should not have the relief hereby prayed, and may, but not under oath, answer under oath being hereby expressly waived, and according to the best and utmost of its knowledge, information and belief, full, true, direct and perfect answer make to all the matters hereinabove set forth, and in order that the defendant may be compelled to account for and pay over the income thus unlawfully derived from the violation of the rights of your orator, as above set forth, and the damages by your orator sustained, and be restrained from further violation of said rights, your orator prays that the said defendant, its agents, servants, attorneys, workmen, employes and confederates, each and every one of them, may be restrained and enjoined provisionally and preliminarily as

Bill of Complaint.

well as perpetually, by the order and injunction of this Honorable Court, from directly or indirectly making, using, vending or putting into use or operation any computing machines constructed according to or embodying the improvements patented to your orator, as aforesaid, or any material or substantial part or parts thereof, and from inviting or encouraging others so to do; and that the computing machines now in the possession of the defendant, and infringing your orator's said patents, or any of them, may be destroyed or delivered up to your orator for that purpose. And that the defendant may be decreed to pay the costs of this suit; that upon the entering of the decree for infringement, as above set forth, your Honors may proceed to assess or cause to be assessed the damages your orator has sustained by reason of such infringement, and also the profits realized by the defendant as aforesaid, and that the defendant may be decreed to pay the same. And that your Honors may grant unto your orator such other and further relief as the equity of the case may require and to your Honors shall seem meet.

May it please your Honors to grant unto your orator a writ of injunction conformable to the prayer of this bill, and also a writ of subpoena of the United States of America, directed to the said Adder Machine Company, and commanding it to appear and answer this bill of complaint, and to abide by and perform such order and decree in the premises as to the court shall seem meet and be required by the principles of equity and good conscience. And your orator will ever pray, etc.

COMPTOGRAPH COMPANY,
By (Sgnd) D. E. FELT,
Vice-President.

(Sgnd) H. N. LOW,
Solicitor.

MUNDAY, EVARTS, ADCOCK & CLARKE,
Counsel.

Bill of Complaint.

UNITED STATES OF AMERICA,
STATE OF ILLINOIS,
COUNTY OF COOK. } ss.

On this 16th day of March, A. D. 1910, before me personally appeared D. E. Felt, who made solemn oath that he is the Vice-President of the Comptograph Company, the corporation complainant in the foregoing bill of complaint, and that he has read and subscribed the same for and on behalf of said Company, and that he knows the contents thereof, and that the same are true of his own knowledge except as to matters and things therein stated to be on information and belief, and as to these matters he believes it to be true.

(Sgnd) D. E. FELT.

Subscribed and sworn to before me at the City of Chicago, in said County and State, this 16th day of March, A. D. 1910.

(Sgnd) WILLIAM A. GEIGER,
Notary Public,
Cook County, Illinois.

My Commission expires April 25, 1912.

[NOTARIAL SEAL.[

IN THE SUPREME COURT OF THE DISTRICT OF COLUMBIA.

Comptograph Company,
Plaintiff,
vs.
Adder Machine Company,
Defendant.

In Equity,
No. 29220.

Defendant's Answer.

The answer of the Adder Machine Company, the defendant, to the bill of complaint herein.

This defendant, now and at all times hereafter saving and reserving unto itself all and all manner of benefit and advantage of exception which can or may be taken to the many errors, insufficiencies, uncertainties and other imperfections in the said complainant's bill of complaint contained, or unto so much and such parts as this defendant is advised is material or necessary to answer unto, answering, says:

This defendant admits that the Comptograph Company is a corporation created and existing under and by virtue of the laws of the State of Illinois, and that it has its principal office in Chicago in said state.

This defendant admits that it is a corporation created and exisitng under and by virtue of the laws of the State of Pennsylvania, and that it has its principal office at Wilkes-Barre in said state, and that it has an office and a regular and established place of business in the City of Washington in the District of Columbia, but this defendant denies that it has committed any infringement of the letters patent mentioned in the said bill of complaint in the City of Washington, or elsewhere.

This defendant admits that before the 10th day of September, A. D. 1894, one Dorr E. Felt, of Chicago, Illinois, was a citizen of the United States residing at the said City of Chicago, in the said State of Illinois,

Defendant's Answer.

but denies that the said Dorr E. Felt was the true and first inventor of the alleged improvement in recording computing machines as described in the letters patent of the United States, No. 568,020, referred to in the said bill of complaint, and denies that the said invention was not known or used by others than the said Felt in this country, or patented or described in any printed publication in this or any foreign country prior to the date of his alleged invention thereof, or more than two years prior to his recited application for a patent therefor, and denies that the same has not been abandoned at the time of his application for said letters patent, and denies that the same was not in public use or on sale in this country for more than two years prior to his said application.

This defendant admits that letters patent of the United States, No. 568,020, were on the 22d day of September, 1896, issued by the United States Patent Office, but whether or not the same were delivered unto the said Dorr E. Felt it is not informed, save by the bill of complaint herein, and therefore denies the same and leaves the complainant to make such proof thereof as it may be advised.

This defendant, upon information and belief, denies that the said Dorr E. Felt was the true and first inventor of the alleged improvement in recording computing machines described in letters patent No. 568,020, and denies that he made application in due form to the Commissioner of Patents of the United States for letters patent upon the said invention or in accordance with the then existing acts of Congress, and denies that the proceedings upon the application made by him were in all respects according to law and of the acts of Congress relating to the examination and granting of patents. On the contrary, this defendant alleges that the said letters

Defendant's Answer.

described and claimed in said letters patent and for the purpose of carrying on the business of manufacturing and selling computing machines containing the said invention, and denies that the said alleged inventions have been and are of great benefit and advantage to the public and are of great value to the said complainant corporation, or to any one else, and denies that large numbers of computing machines containing the said inventions have been made and sold by the said complainant corporation and by the Felt and Tarrant Manufacturing Company, and denies that the public have generally acquiesced in and acknowledged the validity of said letters patent No. 568,020, but, on the contrary, alleges that since the issuance of said letters patent No. 568,020, the said alleged improvements therein described and claimed have been openly, notoriously and defiantly made, sold, used and vended to others to be used by many persons within the United States and elsewhere.

This defendant is not informed, save by said bill of complaint, as to whether the machines made and sold by the Felt and Tarrant Manufacturing Company and by the complainant corporation containing the subject matter of said Letters Patent No. 568,020 have been marked as patented on September 22, 1896, as required by law, and therefore denies the same, and leaves the complainant to make such proof thereof as it may be advised.

This defendant denies each and every allegation of infringement in the said bill of complaint contained, and denies that it has ever manufactured, sold or used the alleged invention described and claimed in said letters patent No. 568,020 in the District of Columbia or elsewhere, and denies that it is preparing and intending and threatening to make, construct, use and vend to others to be used computing machines made according and em-

Defendant's Answer.

patent were neither duly applied for or were they lawfully granted or issued, and this defendant denies that by the issue of said letters patent No. 568,020, there was granted unto said Dorr E. Felt and his heirs and assigns, for the term of seventeen years from the date of said letters patent, the exclusive right to make, use and vend throughout the United States and territories thereof the alleged invention described and claimed in said letters patent.

This defendant is not informed save by said bill of complaint whether or not the alleged rights of the said Dorr E. Felt under said letters patent No. 568,020 were transferred by an instrument in writing to the said Felt and Tarrant Manufacturing Company, or that on or about the 22d day of May, 1902, that the said Felt and Tarrant Manufacturing Company, by an instrument in writing, assigned said letters patent, together with the alleged rights thereunder, to the Comptograph Company, the complainant herein, and therefore denies the same and leaves the said complainant to make such proof thereof as it may be advised.

This defendant denies that by the pretended transfers alleged to have been made by the said Felt to the said Felt and Tarrant Manufacturing Company, as set forth in the third section of said bill of complaint herein, or that by said pretended transfer from the said corporation to the complainant herein, the said complainant became and now is the sole owner of said letters patent and of all rights of action of every kind and nature thereunder.

This defendant, on information and belief, denies that the complainant Comptograph Company, since it became the owner of said letters patent No. 568,020, has invested and expended large sums of money, and been to great labor and exertion in and about the pretended invention

Defendant's Answer.

ploying the alleged improvements forming the subject matter of claims 3 and 4 of said letters patent No. 568,-020, and denies that by reason of any acts of this defendant the complainant has been or is being deprived of any benefits or advantages which would have been obtained by it or its predecessors in interest, or which would have been received and enjoyed by it or them, or that the complainant has suffered any great or irreparable damage by reason of any acts or doings of this defendant.

And this defendant specifically denies all and all manner of unlawful combination and confederacy wherewith by the said bill of complaint it is charged, either with the said the Adder Machine Company, a corporation organied under the laws of the State of New Jersey, and having its principal office at Wilkes-Barre in Pennsylvania, or with the Burroughs Adding Machine Company, a corporation of the State of Michigan. On the contrary, this defendant alleges that the Burroughs Adding Machine Company, a corporation of the State of Michigan, having its principal office and place of business at Detroit in said state and largely engaged in the manufacture of adding machines, is an active and energetic competitor of this defendant in the business of selling said machines, and this defendant is at present defending in the United States Circuit Court for the District of Michigan a suit brought by the said the Burroughs Adding Machine Company against it for the alleged infringement of letters patent of the United States, No. 505,078.

This defendant is informed and believes and therefore avers that the written description or specification of the said alleged invention or improvement which is the subject matter of claims 3 and 4 of said letters patent No. 568,020 is not in such full, clear and exact terms as to enable a person skilled in the art to which it appertains

Defendant's Answer.

to make, construct or use the same, and denies that the principle thereof is duly explained in said letters patent in accordance with the statutes in such cases made and provided, and alleges that the description set forth in said specification is incomplete and ambiguous and that the specification describes and the drawings of the said letters patent disclose an inoperative and useless apparatus or device, and said defendant, therefore, alleges that for each of said reasons said letters patent are of no effect in law and are void.

This defendant is informed and believes and therefore alleges that said letters patent No. 568,020 and the subject matter of claims 3 and 4 thereof are void for the reason that in view of the state of the art at and prior to the date of the said alleged invention of the subject matter thereof by the said Dorr E. Felt it required no invention to produce the said alleged invention or improvement, but that the same was merely the product of the usual mechanical skill of persons engaged in said art, and that the said alleged invention and improvement set forth in the said claims is not therefore a patentable invention or improvement within the meaning of the law in such case made and provided.

This defendant is informed and believes and therefore alleges that the said alleged invention or improvement, the subject matter of claims 3 and 4 of letters patent No. 568,020, was not made by the said Dorr E. Felt solely, but was contrived and devised by him jointly in connection with another person or persons, and that for said reason the said letters patent are void and of no effect in law.

This defendant is informed and believes and therefore alleges that the subject matter of claims 3 and 4 of patent No. 568,020 relate solely to and purport to cover the function of the devices described in said letters patent

Defendant's Answer.

and does not constitute an invention within the meaning of the statutes in such case made and provided, and said claims and the letters patent therefor are therefore void and of no effect in law.

This defendant is informed and believes, and therefore alleges, that the said Dorr E. Felt was not the first, original and sole inventor of the alleged new and useful invention or improvement described and claimed in claims 3 and 4 of said letters patent No. 568,020, and alleges that the said alleged invention and improvement and all of the material and substantial parts thereof had been long prior to the alleged invention or discovery thereof by the said Dorr E. Felt described and shown in the following letters patent, viz.:

Patent No. 388,119. William S. Burroughs, August 21, 1888.

Patent No. 420,617, William S. Burroughs, February 4, 1890.

Patent No. 465,255, Dorr E. Felt, December 15, 1901.

This defendant is informed and believes and therefore alleges that before any alleged invention or discovery by the said Dorr E. Felt of the alleged invention or improvements described and claimed in claims 3 and 4 of letters patent No. 568020, the same and all of the material and substantial parts thereof were known to and used by the following persons at the following mentioned places, viz.:

William S. Burroughs, of St. Louis, Mo., at St. Louis, Mo., and elsewhere.

The American Arithmometer Company of St. Louis, Mo., at St. Louis, Mo., and elsewhere.

The National Cash Register Company, of Dayton, O., at Dayton, O., and elsewhere.

Defendant's Answer.

The Universal Accountant Machine Company, of Chicago, Ill., at Chicago, Ill., and elsewhere.

This defendant, further answering, alleges that the said improvements or pretended inventions, the subject matter of claims 3 and 4 of said letters patent No. 568,020, were known and used by others in this country and were described in certain other printed publications in this and other counties prior to the alleged invention thereof by the said Dorr E. Felt, the names and residences of said certain other persons having such prior knowledge and making such prior use being at present unknown to this defendant, and it therefore prays your Honors that as soon as it may reasonably obtain the information sufficient to set forth these matters in detail it may be permitted to do so by amended answer or otherwise, as to your Honors shall seem meet.

This defendant admits that before the 14th of June, 1895, one Dorr E. Felt, of Chicago, Illinois, was a citizen of the United States residing at the City of Chicago, in the said State of Illinois, but denies that the said Dorr E. Felt was the true and first inventor of the alleged improvement in recording computing machines, as described in the letters patent of the United States, No. 568,021, referred to in the said bill of complaint, and denies that the said invention was not known or used by others than the said Felt in this country, or patented or described in any printed publication in this or any foreign country prior to the date of his alleged invention thereof, or more than two years prior to his recited application for a patent therefor, and denies that the same had not been abandoned at the time of his application for said letters patent, and denies that the same was not in public use or on sale in this country for more than two years prior to his said application.

This defendant admits that letters patent of the United

Defendant's Answer.

States, No. 568,021, were on the 22nd day of September, 1896, issued by the United States Patent Office, but whether or not the same were delivered unto the said Dorr E. Felt, it is not informed, save by the said bill of complaint herein, and therefore denies the same, and leaves the complainant to make such proof thereof as it may be advised.

This defendant, upon information and belief, denies that the said Dorr E. Felt was the true and first inventor of the alleged improvement in recording computing machines described in letters patent No. 568,021, and denies that he made application in due form to the Commissioner of Patents of the United States for letters patent upon the said invention or in accordance with the then existing Acts of Congress, and denies that the proceedings upon the application made by him were in all respects according to law and of the Acts of Congress relating to the examination and granting of patents. On the contrary, this defendant alleges that the said letters patent were neither duly applied for or were they lawfully granted or issued, and this defendant denies that by the issue of said letters patent No. 568,021, that there was granted unto said Dorr E. Felt and his heirs and assigns, for the term of seventeen years, from the date of said letters patent, the exclusive right to make, use and vend throughout the United States and territories thereof the alleged invention described and claimed in said letters patent.

This defendant is not informed, save by the said bill of complaint, whether or not the alleged rights of the said Dorr E. Felt under said letters patent No. 568,021, were transferred by an instrument in writing to the said Felt & Tarrant Manufacturing Company, or that on or about the 22nd day of May, 1902, that the said Felt & Tarrant Manufacturing Company by an instrument in

Defendant's Answer.

writing assigned said letters patent, together with the alleged rights thereunder, to the Comptograph Company, the complainant herein, and therefore denies the same and leaves the said complainant to make such proof thereof as it may be advised.

This defendant denies that by the pretended transfers alleged to have been made by the said Felt to the said Felt & Tarrant Manufacturing Company, as set forth in the fourth section of said bill of complaint herein, or that by said pretended transfer from the said corporation to the complainant herein, the said complainant became and now is the sole owner of said letters patent and of all rights of action of every kind and nature thereunder.

This defendant, on information and belief, denies that the complainant, Comptograph Company, since it became the owner of said letter patent No. 568,021, has invested and expended large sums of money, and been to great labor and exertion in and about the pretended invention described and claimed in said letters patent and for the purpose of carrying on the business of manufacturing and selling computing machines containing the said invention and denies that the said alleged inventions have been and are of great benefit and advantage to the public and are of great value to the said complainant corporation, or to any one else and denies that large numbers of computing machines containing the said inventions have been made and sold by the said complainant corporation and by the Felt & Tarrant Manufacturing Company, and denies that the public have generally acquiesced in and acknowledged the validity of said letters patent No. 568,021, but, on the contrary, alleges that since the issuance of said letters patent No. 568,021, the said alleged improvements therein described and claimed have been openly, notoriously and defiantly made, sold,

Defendant's Answer.

used and vended to others to be used by many persons within the United States and elsewhere.

This defendant is not informed, save by the said bill of complaint, as to whether the machines made and sold by the Felt & Tarrant Manufacturing Company and by the complainant corporation containing the subject matter of said letters patent No. 568,021, have been marked as patented on September 22, 1896, as required by law, and therefore denies the same, and leaves the complainant to make such proof thereof as it may be advised.

This defendant denies each and every allegation of infringement in the said bill of complaint contained, and denies that it has ever manufactured, sold or used the alleged inventions described and claimed in said letters patent No. 568,021, in the District of Columbia or elsewhere, and denies that it is preparing and intending and threatening to make, construct, use and vend to others to be used computing machines made according and employing the alleged improvements forming the subject matter of claims 21, 35, 46, 47, 48, 49 and 52 of said letters patent No. 568,021, and denies that by reason of any acts of this defendant the complainant has been or is being deprived of any benefits or advantages which would have been obtained by it or its predecessors in interest, or which would have been received and enjoyed by it or them, or that the complainant has suffered any great or irreparable damage by reason of any acts or doings of this defendant.

And this defendant specifically denies all and all manner of unlawful combination and confederacy wherewith by the said bill of complaint it is charged, either with the said the Adder Machine Company, a corporation organized under the laws of the State of New Jersey, and having its principal office at Wilkes-Barre, in Pennsylvania, or with the Burroughs Adding Machine Company, a cor-

Defendant's Answer.

poration of the State of Michigan. On the contrary, this defendant alleges that the Burroughs Adding Machine Company, a corporation of the State of Michigan, having its principal office and place of business at Detroit, in said state, and largely engaged in the manufacture of adding machines, is an active and energetic competitor of this defendant in the business of selling said machines, and this defendant is at present defending in the United States Circuit Court for the District of Michigan a suit brought by the said Burroughs Adding Machine Company against it for the alleged infringement of letters patent of the United States No. 505,078.

This defendant is informed and believes and therefore avers that the written description or specification of the said alleged invention or improvement which is the subject matter of claims 21, 35, 46, 47, 48, 49 and 52 of said letters patent No. 568,021 is not in such full, clear and exact terms as to enable a person skilled in the art to which it appertains to make, construct or use the same, and denies that the principle thereof is duly explained in said letters patent in accordance with the statutes in such cases made and provided, and alleges that the description set forth in said specification is incomplete and ambiguous and that the specification describes and the drawings of the said letters patent disclose an inoperative and useless apparatus or device, and said defendant, therefore, alleges that for each of said reasons said letters patent are of no effect in law and are void.

This defendant is informed and believes and therefore alleges that said letters patent No. 568,021 and the subject matter of claims 21, 35, 46, 47, 48, 49 and 52 thereof are void for the reason that in view of the state of the art at and prior to the date of the said alleged invention of the subject matter thereof by the said Dorr E. Felt it required no invention but to produce the said alleged in-

Defendant's Answer.

vention or improvement, but that the same was merely the product of the usual mechanical skill of persons engaged in said art and that the said alleged invention and improvement set forth in the said claims is not therefore for a patentable invention or improvement within the meaning of the law in such case made and provided.

This defendant is informed and believes and therefore alleges that the said alleged invention or improvement, the subject matter of claims 21, 35, 46, 47, 48, 49 and 52 of letters patent No. 568,021, was not made by the said Dorr E. Felt, solely, but was contrived and devised by him jointly in connection with another person or persons and that for said reason the said letters patent are void and of no effect in law.

This defendant is informed and believes and therefore alleges that the subject matter of claims 21, 35, 46, 47, 48, 49 and 52 of letters patent No. 568,021 relate solely to and purport to cover the function of the devices described in said letters patent and does not constitute an invention within the meaning of the statutes in such case made and provided and said claims and the letters patent therefor are therefore void and of no effect in law.

This defendant is informed and believes, and therefore alleges, that the said Dorr E. Felt was not the first, original and sole inventor of the alleged new and useful invention or improvement described and claimed in claims 21, 35, 46, 47, 48, 49 and 52 of said letters patent No. 568,021, and alleges that the said alleged invention and improvement and all of the material and substantial parts thereof had been long prior to the alleged invention or discovery thereof by the said Dorr E. Felt described and shown in the following letters patent, viz.:

Dorr E. Felt, No. 465,255, December 15, 1901;

Thomas Carroll, No. 521,333, June 12, 1894;

John Pfeiffer, No. 488,903, December 27, 1892;

Defendant's Answer

Thomas Carney, No. 497,860, May 23, 1893;

Lee S. Burridge and Newman R. Marshman, 533,331, January 21, 1896;

Joseph A. Treat, 510,211, December 5, 1893.

This defendant is informed and believes and therefore alleges that before any alleged invention or discovery by the said Dorr E. Felt of the alleged inventions or improvements described and claimed in claims 21, 35, 46, 47, 48, 49 and 52 of letters patent No. 568,021, the same and all of the material and substantial parts thereof were known to and used by the following persons at the following mentioned places, viz.:

The American Arithmometer Company, of St. Louis, Mo., at St. Louis, Mo., and elsewhere;

National Cash Register Company, of Dayton, O., at Dayton, O., and elsewhere;

The Universal Accountant Machine Company, of Chicago, Ill., at Chicago, Ill., and elsewhere;

Joseph A. Treat, of Stuart, Iowa, at Stuart, Iowa, and elsewhere;

Lee S. Burridge, of New York, N. Y., at New York, N. Y., and elsewhere;

Newman R. Marshman, of New York, N. Y., at New York, N. Y., and elsewhere;

Thomas Carney, of Dayton, O., at Dayton, O., and elsewhere;

John Pfeiffer, of Dayton, O., at Dayton, O., and elsewhere;

Thomas Carroll, of New Haven, Conn., at New Haven, Conn., and elsewhere;

Hubinger-Carroll Cash Register Co., of New Haven, Conn., at New Haven, Conn., and elsewhere.

This defendant, further answering, alleges that said improvements or pretended inventions, the subject matter of claims 21, 35, 46, 47, 48, 49 and 52 of letters patent

Defendant's Answer.

No. 568,021 were known and used by others in this country and were described in certain other printed publications in this and other countries prior to the alleged invention thereof by the said Dorr E. Felt, the names and residences of said certain other persons having such prior knowledge and making such prior use being at present unknown to this defendant, and it therefore prays your Honors that as soon as it may reasonably obtain the information sufficient to set forth these matters in detail it may be permitted to do so by amended answer or otherwise, as to your Honors shall seem meet.

This defendant admits that before the 31st day of May, 1898, one Dorr E. Felt, of Chicago, Illinois, was a citizen of the United States residing at the City of Chicago, in the said State of Illinois, but denies that the said Dorr E. Felt was the true and first inventor of the alleged improvement in recording computing machines, as described in the letters patent of the United States No. 628,176, referred to in said bill of complaint, and denies that the said invention was not known or used by others than the said Felt in this country, or patented or described, in any printed publication in this or any foreign country prior to the date of his alleged invention thereof, or more than two years prior to his recited application for a patent therefor, and denies that the same had not been abandoned at the time of his application for said letters patent, and denies that the same was not in public use or on sale in this country for more than two years prior to his said application.

This defendant admits that letters patent of the United States No. 628,176 were on the July 4, 1899, issued by the United States Patent Office, but whether or not the same were delivered unto the said Dorr E. Felt, it is not informed, save by the bill of complaint herein, and there-

Defendant's Answer.

fore denies the same, and leaves the complainant to make such proof thereof as it may be advised.

This defendant, upon information and belief, denies that the said Dorr E. Felt was the true and first inventor of the alleged improvement in recording computing machines described in letters patent No. 628,176, and denies that he made application in due form to the Commissioner of Patents of the United States for letters patent upon the said invention or in accordance with the then existing acts of Congress, and denies that the proceedings upon the application made by him were in all respects according to law and of the acts of Congress relating to the examination and granting of patents. On the contrary, this defendant alleges that the said letters patent were neither duly applied for or were they lawfully granted or issued, and this defendant denies that by the issue of said letters patent No. 628,176 there was granted unto said Dorr E. Felt and his heirs and assigns for the term of seventeen years from the date of said letters patent, the exclusive right to make, use and vend throughout the United States and territories thereof the alleged invention described and claimed in said letters patent.

This defendant is not informed, save by said bill of complaint, whether or not the alleged rights of the said Dorr E. Felt under said letters patent No. 628,176, were transferred by an instrument in writing to the said Felt & Tarrant Manufacturing Company, or that on or about the 12th day of May, 1902, or that the said Felt & Tarrant Manufacturing Company by an instrument in writing assigned said letters patent together with the alleged rights thereunder, to the Comptograph Company, the complainant herein, and therefore denies the same and leaves the complainant to make such proof thereof as it may be advised.

This defendant denies that by the pretended transfers

alleged to have been made by the said Felt to the said Felt & Tarrant Manufacturing Company, as set forth in the fifth section of the said bill of complaint herein, or that by said pretended transfer from the said corporation to the complainant herein, the said complainant became and now is the sole owner of said letters patent and of all rights of action of every kind and nature thereunder. Defendant's Answer.

This defendant, on information and belief, denies that the complainant, Comptograph Company, since it became the owner of said letters patent No. 628,176 has invested and expended large sums of money and been to great labor and exertion in and about the pretended invention described and claimed in said letters patent and for the purpose of carrying on the business of manufacturing and selling computing machines containing the said invention and denies that the said alleged inventions have been and are of great benefit and advantage to the public and are of great value to the said complainant corporation, or to any one else and denies that large numbers of computing machines containing the said inventions have been made and sold by the said complainant corporation and by the Felt & Tarrant Manufacturing Company, and denies that the public have generally acquiesced in and acknowledged the validity of said letters patent No. 628,176, but, on the contrary, alleges that since the issuance of said letters patent No. 628,176, the said alleged improvements therein described and claimed have been openly, notoriously and defiantly made, sold, used and vended to others to be used by many persons within the United States and elsewhere.

This defendant is not informed, save by said bill of complaint, as to whether the machines made and sold by the Felt & Tarrant Manufacturing Company and by the complainant corporation containing the subject matter of said letters patent No. 628,176 have been marked as pat-

Defendant's Answer.

ented on July 4, 1899, as required by law, and therefore denies the same and leaves the complainant to make such proof thereof as it may be advised.

This defendant denies each and every allegation of infringement in said bill of complaint contained, and denies that it has ever manufactured, sold or used the alleged invention described and claimed in said letters patent No. 628,176, in the District of Columbia or elsewhere, and denies that it is preparing and intending and threatening to make, construct, use and vend to others to be used computing machines made according and employing the alleged improvements forming the subject matter of claims 1, 2 and 4 of said letters patent No. 628,176, and denies that by reason of any acts of this defendant the complainant has been or is being deprived of any benefits or advantages which would have been obtained by it or its predecessors in interest, or which would have been received and enjoyed by it or them, or that the complainant has suffered any great or irreparable damage by reason of any acts or doings of this defendant.

And this defendant specifically denies all and all manner of unlawful combination and confederacy wherewith by the said Bill of Complaint it is charged, either with the said the Adder Machine Company, a corporation organized under the laws of the State of New Jersey, and having its principal office at Wilkes-Barre, in Pennsylvania, or with the Burroughs Adding Machine Company, a corporation of the State of Michigan. On the contrary, this defendant alleges that the Burroughs Adding Machine Company, a corporation of the State of Michigan having its principal office and place of business at Detroit, in said state, and largely engaged in the manufacture of adding machines, is an active and energetic competitor of this defendant in the business of selling said machines, and this defendant is at present de-

Defendant's Answer.

fending in the United States Circuit Court for the District of Michigan a suit brought by the said the Burroughs Adding Machine Company against it for the alleged infringement of letters patent of the United States No. 505,078.

This defendant is informed and believes and therefore avers that the written description or specification of the said alleged invention or improvement which is the subject matter of claims 1, 2 and 4 of said letters patent No. 628,176, is not in such full, clear and exact terms as to enable a person skilled in the art to which it appertains to make, construct or use the same, and denies that the principle thereof is duly explained in said letters patent in accordance with the statutes in such cases made and provided, and alleges that the description set forth in said specification is incomplete and ambiguous and that the specification describes and the drawings of the said letters patent disclose an inoperative and useless apparatus or device, and said defendant, therefore, alleges that for each of said reasons said letters patent are of no effect in law and are void.

This defendant is informed and believes and therefore alleges that said letters patent No. 628,176, and the subject matter of claims 1, 2 and 4 thereof, are void for the reason that in view of the state of the art at and prior to the date of the said alleged invention of the subject matter thereof by the said Dorr E. Felt, it required no invention to produce the said alleged invention or improvement, but that the same was merely the product of the usual mechanical skill of persons engaged in said art and that the said alleged invention and improvement set forth in the said claims is not therefor for a patentable invention or improvement within the meaning of the law in such case made and provided.

Defendant's Answer.

This defendant is informed and believes and therefore alleges that the said alleged invention or improvement, the subject matter of claims 1, 2 and 4 of letters patent No. 628,176 was not made by the said Dorr E. Felt solely, but was contrived and devised by him jointly in connection with another person or persons and that for said reason the said letters patent are void and of no effect in law.

This defendant is informed and believes and therefore alleges that the subject matter of claims 1, 2 and 4 of letters patent No. 628,176, relate solely to and purport to cover the function of the devices described in said letters patent and does not constitute an invention within the meaning of the statutes in such case made and provided, and said claims and the letters patent therefor are therefore void and of no effect in law.

This defendant is informed and believes, and therefore alleges, that the said Dorr E. Felt was not the first, original and sole inventor of the alleged new and useful invention or improvement described and claimed in claims 1, 2 and 4 of said letters patent No. 628,176, and alleges that the said alleged invention or improvement and all of the material and substantial parts thereof had been long prior to the alleged invention and discovery thereof by the said Dorr E. Felt described and shown in the following letters patent, viz.:

388,119, W. S. Burroughs, August 21, 1888.
401,730, L. G. Garrett, April 23, 1889.
439,554, U. S. McCormack, October 28, 1890.
439,847, W. M. Reason, November 4, 1890.
441,232, Dorr E. Felt, November 25, 1890.
441,233, Dorr E. Felt, November 25, 1890.
465,255, Dorr E. Felt, December 15, 1891.
465,451, A. T. Brown, December 22, 1891.
471,872, G. F. Loar, March 29, 1892.

Defendant's Answer.

500,793, F. H. Bowen, July 4, 1893.
501,753, J. N. Williams, July 18, 1893.
504,963, W. S. Burroughs, September 12, 1893.
505,078, W. S. Burroughs, September 12, 1893.
517,735, J. D. Daugherty, April 3, 1894.
524,867, W. Sears, August 21, 1894.
538,807, J. A. Wolfe, May 7, 1895.
543,111, C. Spiro, July 23, 1895.
553,331, Burridge & Marshman, January 12, 1896.
555,039, G. W. Dudley, February 18, 1896.
568,021, Dorr E. Felt, September 22, 1896.
578,303, J. C. Wolfe, March 2, 1897.
580,863, De Kerniea J. T. Hiett, April 20, 1897.
595,864, W. H. Pike, December 21, 1897.
693,958, Dorr E. Felt, February 25, 1902.

German Patent 7393, November 19, 1879, to Konigsberger & Co.

German Patent 66,340, March 13, 1892, to J. L. Heuber.

This defendant is informed and believes and therefore alleges that before any alleged invention or discovery by the said Dorr E. Felt of the alleged inventions or improvements described and claimed in claims 1, 2 and 4 of letters patent No. 628,176, the same and all of the material and substantial parts thereof were known to and used by the following persons at the following mentioned places, viz.:

William H. Pike, Jr., of Newark, N. J., at St. Louis, Mo.

Edwin G. Langhorne, of Orange, N. J., at St. Louis, Mo.

George Van Beck, of Burlington, Iowa, at St. Louis, Mo.

This defendant, further answering, alleges that the said improvements or pretended inventions, the subject matter of claims 1, 2 and 3 of said letters patent No. 628,176, were known and used by others in this country

Defendant's Answer.

and were described in certain other printed publications in this and other countries prior to the alleged invention thereof by the said Dorr E. Felt, the names and residences of said certain other persons having such prior knowledge and making such prior use being at present unknown to this defendant, and it therefore prays your Honor that as soon as it may reasonably obtain the information sufficient to set forth these matters in detail it may be permitted to do so by amended answer or otherwise as to your Honor shall seem meet.

This defendant, further answering, is informed and believes and alleges that the alleged invention forming the subject matter of claims 1, 2 and 4 of letters patent No. 628,176, was abandoned to the public prior to the application of the said Dorr E. Felt for letters patent therefor.

This defendant, further answering, alleges that a suit for the alleged infringement of claims 1, 2 and 4 of said letters patent No. 628,176 was brought in the Circuit Court of the United States for the Northern District of Illinois by the complainant herein against the Universal Adding Machine Company, an Illinois Corporation, and that a decree therein was entered in favor of the complainant and an appeal was taken therefrom by the said the Universal Adding Machine Company to the Circuit Court of Appeals for the Seventh Circuit, and having been duly considered by said Court of Appeals, the decree of the court below was reversed and the case remanded with instructions to enter a decree dismissing the Bill for want of equity for the reasons stated in the opinion of the court which is found fully and at length at pages 981 to 984 at Vol. 146 of the Federal Reporter.

This defendant admits that before the 2nd day of May, 1898, one Dorr E. Felt of Chicago, Illinois, was a citizen

Defendant's Answer.

of the United States residing at the said City of Chicago, in the said State of Illinois, but denies that the said Dorr E. Felt was the true and first inventor of the alleged improvement in recording computing machines, as described in the letters patent of the United States, No. 661,121, referred to in the said bill of complaint, and denies that the said invention was not known or used by others than the said Felt in this country, or patented or described in any printed publication in this or any foreign country prior to the date of his alleged invention thereof, or more than two years prior to his recited application for a patent therefor, and denies that the same had not been abandoned at the time of his application for said letters patent, and denies that the same was not in public use or on sale in this country for more than two years prior to his said application.

This defendant admits that letters patent of the United States No. 661,121, were on the 6th day of November, 1900, issued by the United States Patent Office, but whether or not the same were delivered unto the said Dorr E. Felt, it is not informed, save by the Bill of Complaint herein, and therefore denies the same, and leaves the complainant to make such proof thereof as it may be advised.

This defendant, upon information and belief, denies that the said Dorr E. Felt was the true and first inventor of the alleged improvement in recording computing machines described in letters patent No. 661,121, and denies that he made application in due form to the Commissioner of Patents of the United States for letters patent upon the said invention or in accordance with the then existing Acts of Congress, and denies that the proceedings upon the application made by him were in all respects according to law and of the Acts of Congress relating to the examination and granting of patents. On

Defendant's Answer.

the contrary, this defendant alleges that the said letters patent were neither duly applied for or were they lawfully granted or issued, and this defendant denies that by the issue of said letters patent No. 661,121 there was granted unto the said Dorr E. Felt and his heirs and assigns, for the term of seventeen years, from the date of said letters patent, the exclusive right to make, use and vend throughout the United States and territories thereof the alleged invention described and claimed in said letters patent.

This defendant is not informed, save by said Bill of Complaint, whether or not the alleged rights of the said Dorr E. Felt under said letters patent No. 661,121, were transferred by an instrument in writing to the said Felt & Tarrant Manufacturing Company, or that on or about the 12th day of May, 1902, that the said Felt & Tarrant Manufacturing Company by an instrument in writing assigned said letters patent together with the alleged rights thereunder to the Comptograph Company, the complainant herein, and therefore denies the same and leaves the said complainant to make such proof thereof as it may be advised.

This defendant denies that by the pretended transfers alleged to have been made by the said Felt to the said Felt & Tarrant Manufacturing Company, as set forth in the sixth section of said Bill of Complaint herein, or that by said pretended transfer from the said corporation to the complainant herein, the said complainant became and now is the sole owner of said letters patent and of all rights of action of every kind.

This defendant, on information and belief, denies that the complainant, Comptograph Company, since it became the owner of said letters patent No. 661,121, has invested and expended large sums of money, and been to great

Defendant's Answer.

labor and exertion in and about the pretended invention described and claimed in said letters patent and for the purpose of carrying on the business of manufacturing and selling computing machines containing the said invention and denies that the said alleged inventions have been and are of great benefit and advantage to the public and are of great value to the said complainant corporation, or to anyone else, and denies that large numbers of computing machines containing the said inventions have been made or sold by the said complainant corporation and by the Felt & Tarrant Manufacturing Company, and denies that the public have generally acquiesced in and acknowledged the validity of said letters patent No. 661,-121, but, on the contrary, alleges that since the issuance of said letters patent No. 661,121, the said alleged improvements therein described and claimed have been openly, notoriously and defiantly made, sold, used and vended to others to be used by many persons within the United States and elsewhere.

This defendant is not informed, save by said Bill of Complaint, as to whether the machines made and sold by the Felt & Tarrant Manufacturing Company and by the complainant corporation containing the subject matter of said letters patent No. 661,121, have been marked as patented on November 6, 1900, as required by law, and therefore denies the same and leaves the complainant to make such proof thereof as it may be advised.

This defendant denies each and every allegation of infringement in the said Bill of Complaint contained, and denies that it has ever manufactured, sold or used the alleged invention described and claimed in said letters patent No. 661,121 in the District of Columbia or elsewhere, and denies that it is preparing and intending and threatening to make, construct, use and vend to others to be used, computing machines made according and em-

Defendant's Answer.

ploying the alleged improvements forming the subject matter of claims 37, 38, 39 and 40 of said letters patent No. 661,121, and denies that by reason of any acts of this defendant the complainant has been or is being deprived of any benefits or advantages which would have been obtained by it or its predecessors in interest, or which would have been received and enjoyed by it or them, or that the complainant has suffered any great or irreparable damage by reason of any acts or doings of this defendant.

And this defendant specifically denies all and all manner of unlawful combination and confederacy wherewith by the said Bill of Complaint it is charged, either with the said the Adder Machine Company, a corporation organized under the laws of the State of New Jersey, and having its principal office at Wilkes-Barre, in Pennsylvania, or with the Burroughs Adding Machine Company, a corporation of the State of Michigan. On the contrary, this defendant alleges that the Burroughs Adding Machine Company, a corporation of the State of Michigan, having its principal office and place of business at Detroit, in said state, and largely engaged in the manufacture of adding machines, is an active and energetic competitor of this defendant in the business of selling said machines, and this defendant is at present defending in the United States Circuit Court for the District of Michigan a suit brought by the said the Burroughs Adding Machine Company against it for the alleged infringement of letters patent of the United States No. 505,078.

This defendant is informed and believes and therefore avers, that the written description or specification of the said alleged invention or improvement which is the subject matter of claims 37, 38, 39 and 40 of said letters patent No. 661,121, is not in such full, clear and exact terms

Defendant's Answer.

as to enable a person skilled in the art to which it appertains to make, construct or use the same, and denies that the principle thereof is duly explained in said letters patent in accordance with the Statutes in such case made and provided, and alleged that the description set forth in said specification is incomplete and ambiguous and that the specification describes and the drawings of the said letters patent disclose an inoperative and useless apparatus or device, and said defendant, therefore, alleges that for each of said reasons said letters patent are of no effect in law and are void.

This defendant is informed and believes and therefore alleges that said letters patent No. 661,121 and the subject matter of claims Nos. 37, 38, 39 and 40 thereof are void, for the reason that in view of the state of the art at and prior to the date of the alleged invention of the subject matter thereof by the said Dorr E. Felt, it required no invention to produce the said alleged invention or improvement, but that the same was merely the product of the usual mechanical skill of persons engaged in said art and that the said alleged invention and improvement set forth in the said claims is not therefore for a patentable invention or improvement within the meaning of the law in such case made and provided.

This defendant is informed and believes and therefore alleges that the said alleged invention or improvement, the subject matter of claims 37, 38, 39 and 40 of letters patent No. 661,121, was not made by said Dorr E. Felt solely, but was contrived and devised by him jointly in connection with another person or persons and that for said reason the said letters patent are void and of no effect in law.

This defendant is informed and believes and alleges that the subject matter of the claims 37, 38, 39 and 40 of letters patent No. 661,121 relate solely to and purport to

Defendant's Answer.

cover the function of the devices described in said letters patent and does not constitute an invention within the meaning of the Statutes in such case made and provided, and said claims and the letters patent therefor are therefore void and of no effect in law.

This defendant is informed and believes and therefore alleges that the said Dorr E. Felt was not the first, original and sole inventor of the alleged new and useful improvement described and claimed in claims 37, 38, 39 and 40 of letters patent No. 661,121, and alleges that the said alleged invention and improvement and all of the material and substantial parts thereof had been long prior to the alleged invention or discovery thereof by the said Dorr E. Felt described and shown in the following letters patent, viz.:

No. 124,939, Joseph C. Dane, March 26, 1872.
No. 337,657, Ellis S. Bloomfield, Jr., March 9, 1886.
No. 426,004, John Frick, April 22, 1890.
No. 413,734, Sylvester H. Roper, October 29, 1889.
No. 271,176, Charles H. White, January 23, 1883.
No. 245,620, Sullivan Forehand, August 16, 1881.
No. 423,392, Frank B. Rae, March 11, 1890.
No. 179,493, Alfred B. Tanner, July 4, 1876.

This defendant is informed and believes and therefore alleges that before any alleged invention or discovery by the said Dorr E. Felt of the alleged invention or improvements described and claimed in claims 37, 38, 39 and 40 of letters patent No. 661,121, the same and all of the material and substantial parts thereof were known to and used by the following persons at the following mentioned places, viz.:

Charles C. Dane, of La Crosse, Wis., at La Crosse, Wis., Meriden, Conn., and elsewhere.

Charles Parker, of Meriden, Conn., at Meriden, Conn., and elsewhere.

Defendant's Answer.

Frank B. Rae, of Detroit, Michigan, at Detroit, Michigan, and elsewhere.

Sullivan Forehand, of Worcester, Mass., at Worcester, Mass., and elsewhere.

John Frick, of Laramie, Wyoming, at Laramie, Wyoming, and elsewhere.

Ellis S. Bloomfield, of Jersey City, N. J., at Jersey City, N. J., and elsewhere.

Sylvester H. Roper, of Boston, Mass., at Boston, Mass., and elsewhere.

Charles H. White, of New York, N. Y., at New York, N. Y., and elsewhere.

Alfred B. Tanner, of New Haven, Conn., at New Haven, Conn., and elsewhere.

The firm of Sargent & Co., and the members thereof, of New Haven, Conn., at New Haven, Conn., and elsewhere.

This defendant, further answering, alleges that said improvements or pretended inventions, the subject matter of claims 37, 38, 39 and 40 of letters patent No. 661,-121, were known and used by others in this country and were described in certain other printed publications in this and other countries prior to the alleged invention thereof by the said Dorr E. Felt, the names and residences of said certain other persons having such prior knowledge and making such prior use, being at present unknown to this defendant, and it therefore prays your Honor that as soon as it may reasonably obtain the information sufficient to set forth these matters in detail it may be permitted to do so by amended answer or otherwise, as to your Honor shall seem meet.

This defendant, further answering, alleges that the adding and listing machines of its manufacture which is stated by the Bill of Complaint herein to be an infringement upon the alleged rights of the complainant corporation under the sundry claims of the different letters patent herein set forth, is made according to the description and under the terms of the claims of the following

Defendant's Answer.

letters patent of the United States belonging to this defendant as assignee of Charles Wales, namely, Nos. 759,944, 766,097, 745,539, 745,540, 745,541, 745,542, 745,543, 794,205, 795,377, 795,378, 796,024, 796,617, 797,032 and under the patent of Charles N. McFarland No. 842,232.

This defendant, further answering, denies any and all manner of unlawful combination and confederacy wherewith by the said Bill of Complaint it is charged and prays the same benefit of the facts and things herein set forth as if for the reason thereof it had demurred to the said Bill of Complaint where a Demurrer would have been proper and the same benefit thereof as if it had specially pleaded to the said Bill of Complaint where a special plea would have been proper, and it submits to this Honorable Court and insists that, the premises being considered, the complainant has no right to any further answer to said Bill of Complaint or to any part thereof than is hereinbefore contained and no right to any accounting, discovery, injunction or any relief prayed for in said Bill of Complaint.

And this defendant prays to be hence dismissed with its reasonable costs and charges in this behalf most wrongfully sustained.

THE ADDER MACHINE COMPANY,
By ABRAM G. NESBITT,
President.

WILLIAM R. BAIRD,
Attorney for Defendant and of Counsel,
271 Broadway, New York, N. Y.

Defendant's Answer.

COMMONWEALTH OF PENNSYLVANIA,
LUZERN COUNTY. } ss.

ABRAM G. NESBITT, being duly sworn, deposes and says: That he is the President of The Adder Machine Company, the defendant named in the foregoing Answer; that he has read the said Answer and knows the contents thereof, and that the same is true of his own knowledge, except as to the matters therein stated to be alleged on information and belief, and that as to those matters he believes it to be true.

ABRAM G. NESBITT.

Subscribed and sworn to before me this 12th day of April, 1910.

GRACE VAN HORN,
Notary Public.

IN THE SUPREME COURT OF THE DISTRICT OF COLUMBIA.

Comptograph Company,
Complainant,
vs.
Adder Machine Company,
Defendant.

In Equity.
No. 29220.

Replication.

The Replication of the Comptograph Company, to the Answer of the Adder Machine Company.

This Repliant saving and reserving to itself now, and at all times hereafter, all and all manner of benefit and advantage of exception which may be had or taken to the manifold insufficiencies of the said answer, for replication thereunto, says that it will aver, maintain and prove its Bill of Complaint, to be true, certain and sufficient in the law to be answered unto: and that the said answer of the said defendant is uncertain, untrue and insufficient to be replied to by this repliant; without this, that any other matter or things whatsoever, in the said answer contained, material or effectual in the law to be replied unto, and not herein and hereby well and sufficiently replied unto, confessed or avoided, traversed or denied, is true; all which matter and things this repliant is and will be ready to aver, maintain and prove as this Honorable Court shall direct, and humbly prays as in and by its said bill it has already prayed.

H. N. Low,
Solicitor for Complainant.

MUNDAY, EVARTS, ADCOCK & CLARKE,
Of Counsel for Complainant.

IN THE SUPREME COURT OF THE DISTRICT OF COLUMBIA.

Comptograph Company,
Complainant,
vs.
Adder Machine Company,
Defendant.
} In Equity.

STIPULATION.

Stipulation as to Record in Massachusetts Case, and as to Defendant's Machine.

For the purpose of mutually saving time and expense that would be involved in re-taking certain evidence already offered in another suit between the same parties, it is stipulated and agreed by and between the parties, by their respective counsel, that all of the evidence, testimony and exhibits, heretofore introduced by each of said parties in a suit pending between them in the United States Circuit Court for the District of Massachusetts (entitled Comptograph Company, Complainant, *vs.* Adder Machine Company, Defendant, In Equity, No. 325) may be and hereby is offered and introduced in the present suit, in this Supreme Court of the District of Columbia, to have the same force and effect as if said evidence had been originally offered in this present suit after the joining of issue herein; and the same provision shall and is hereby made to apply to and cover all of the stipulations and objections of counsel as the same appear on the record of the original taking of evidence in said prior suit;

And it is also stipulated and agreed that the defendant has a regular and established place of business within the aforesaid District of Columbia, and has, before the filing of the present suit and since the complainant became the owner of all of the Letters Patent named in the bill of complaint, sold, within said District of Columbia, adding machines identically like the adding machine

Stipulation as to Record in Massachusetts Case, and as to Defendant's Machine.

marked "Complainant's Exhibit, Defendant's Machine" that is included in the aforesaid evidence offered in the aforesaid prior suit; and it is further stipulated and agreed that the complainant shall be and hereby is deemed to have closed its *prima facie* proofs herein, but the defendant has only partly completed its proofs and is to be permitted to take further proofs before the complainant tenders its rebuttal proofs.

Dated this 6th day of April, 1910.

MUNDAY, EVARTS, ADCOCK & CLARKE,
Counsel for Complainant

(Sgnd.) WILLIAM R. BAIRD,
Counsel for Defendant.

IN THE SUPREME COURT OF THE DISTRICT OF COLUMBIA.

Comptograph Company,
Complainant,
vs.
Adder Machine Company,
Defendant.
} In Equity.

STIPULATION.

Stipulation as to Record in Burroughs Case.

For the purpose of mutually saving time and expense that would be involved in re-taking certain testimony that has already been taken in a suit to which the present complainant was a party and in which the same patent No. 628,176 named in the present bill of complaint was also involved, it is stipulated and agreed by and between the parties hereto, by their respective counsel, that each of the parties to the present suit may use, with the same force and effect as if it had been originally offered herein by the present complainant and defendant respectively, any evidence heretofore offered by the respective parties complainant and defendant in that certain suit now pending in the United States Circuit Court for the Eastern Division of the Northern District of Illinois and entitled "Comptograph Company, Complainant, *vs.* Burroughs Adding Machine Company, Defendant, In Chancery, No. 28,782," as such evidence appears of record in the printed record filed in said pending case in said District of Illinois; it being understood that the parts of said record that are adopted by the complainant in the present suit shall be made a part of the complainant's rebuttal proofs herein, and that the parts of said record that are adopted by the defendant in the present suit shall be made a part of the defendant's evidence in chief herein or else shall be entered as surrebuttal proofs herein if the defendant so desires;

Stipulation as to Record in Burroughs Case.

provided, however, that any deposition adopted from said prior record shall be taken in its entirety, unless the opposing party herein shall consent to the omission of some part or parts of such deposition; and it is further provided that any complainant's exhibits referred to in the testimony the complainant adopts from said previous record are to be produced by the complainant at the hearings in the present suit, and the defendant may in like manner produce any of the "defendant's exhibits" that are referred to in the testimony it may adopt from said previous record, so far as the present defendant is able to obtain such exhibits offered by the defendant in said pending suit in the District of Illinois; but it is agreed that any copies of paper exhibits that may appear in said previous record, and that are referred to in testimony adopted as aforesaid from said record, shall be accepted herein as having the same force and effect as their originals, subject only to the correction of any clerical errors that may be discovered in such copies upon any comparison thereof with their originals.

Dated this 6th day of April, 1910.

MUNDAY, EVARTS, ADCOCK & CLARKE,
Counsel for Complainant.

(Signed) WILLIAM R. BAIRD,
Counsel for Defendant.

PLAINTIFF'S PRIMA FACIE TESTIMONY.

IN THE UNITED STATES CIRCUIT COURT, DISTRICT OF MASSACHUSETTS.

Comptograph Company,
Complainant,
vs.
Adder Machine Company,
(of the State of Pennsylvania),
Defendant.

In Chancery.
No. 325.

Deposition of Plaintiff's Witness, Harry B. Wyeth, stipulated in from Massachusetts Case.

Testimony taken on behalf of the complainant in the above entitled cause, pursuant to the annexed notice, at the offices of Messrs. Munday, Evarts, Adcock & Clarke, No. 907 Marquette Building, Chicago, Illinois, commencing at ten o'clock A. M. on Monday, November 4, 1907, before H. M. Munday, Esq., a notary public duly qualified.

Present, Henry Love Clarke, Esq., on behalf of the complainant; William Raimond Baird, Esq., on behalf of the defendant.

It is hereby stipulated by the parties, by their respective counsel, that the testimony in this cause may be taken orally under the 67th Rule in Equity, as amended, before any notary public, with the same force and effect as though such notary had been apointed by the court a special examiner.

Further, that uncertified copies of the specifications of patents may be used and offered in evidence with the same force and effect as original copies, subject to correction if desired by either party by the production of original or certified copies.

Further, that all exhibits offered in evidence may be

Deposition of Plaintiff's Witness, Harry B. Wyeth, stipulated in from Massachusetts Case.

retained in the possession of the respective counsel until the final hearing, subject, however, to examination by respective counsel as may be desired, and the production when requested upon the taking of testimony by either party, and to be filed in court at any time upon the written request of counsel for either party.

Further, that the Comptograph Company, complainant herein, is a corporation duly organized and existing under and by virtue of the laws of the State of Illinois; and that the Adder Machine Company, defendant herein, is a corporation duly organized and existing under and by virtue of the laws of the State of Pennsylvania.

Further, that each of the patents here sued upon and the inventions therein set forth were duly assigned, and the assignments thereof duly recorded, to the Felt & Tarrant Mfg. Co., a corporation of the State of Illinois, by the patentee Dorr E. Felt, of Chicago, Illinois, prior to the assignment of each of all of said patents by the Felt & Tarrant Mfg. Co. to the Comptograph Company; and that the Comptograph Company now holds the full title to each of said patents, under due assignment of record, and has held such title since the date of said assignment, the 12th day of May, A. D. 1902.

And thereupon HARRY B. WYETH, a witness on behalf of the complainant, being duly sworn, testified as follows in response to the interrogatories of counsel:

Q. 1. Please state your name, age, residence and occupation.

A. Harry B. Wyeth; 39 years of age; Evanston, Ills.; general manager of the Comptograph Company.

Q. 2. Do you know the defendant corporation, the Adder Machine Company of the State of Pennsylvania?

Deposition of Plaintiff's Witness, Harry B. Wyeth, stipulated in from Massachusetts Case.

A. Yes.

Q. 3. Please state what business they are engaged in, if you know?

A. Manufacture and sale of adding and listing machines.

Q. 4. Where are they so engaged?

A. Their main office and factory is at Wilkesbarre. Pennsylvania, and they have various sales offices throughout the United States. I should add that their factory is properly named as being at Kingston, which is across the river from Wilkesbarre.

Q. 5. Please state whether or not the said defendant has a place of business in the State of Massachusetts, and if so, where in said state?

A. It has a sales agency at Boston, Mass.

Q. 6. Please state whether or not the said office is the place of business of the said company in said City of Boston?

A. It is.

Q. 7. Who has charge of the business of the Adder Machine Company at its said Boston office?

A. W. H. McFarland.

Q. 8. Do you know the said W. H. McFarland?

A. I do.

Q. 9. Please state whether or not you have any advertising pamphlet given out by the said Boston office of the said defendant, and if so, please produce the same.

A. I have and herewith produce same.

Counsel for complainant offers in evidence the pamphlet produced and identified by the witness and asks that the same be marked Complainant's Exhibit "Circular issued by Defendant's Boston Office."

Deposition of Plaintiff's Witness, Harry B. Wyeth, stipulated in from Massachusetts Case.

Counsel for defendant objects to the marking on the ground that it states an allegation of fact, namely, the alleged issue of the exhibit not testified to by the witness and on the further ground that it is not proven to have been issued by the defendant corporation, bears internal evidence of having been altered since it was made and is irrelevant and immaterial.

Q. 10. Please state where and when you obtained this pamphlet?

A. My recollection is that I obtained it in Boston at the Exhibit of the Adder Machine Company at the Boston Business Show. I can refresh my recollection as to exactly when it was by referring to a memorandum in my office, which I will do.

Q. 11. The bill of complaint in this case was filed on or about the 13th day of March of the present year. Please state whether or not you know that the defendant corporation has sold adding machines in the State of Massachusetts or the City of Boston prior to said month of March and since the 12th day of May, 1902, the date upon which the Comptograph Company acquired title to the patents here sued upon?

A. I do. They have.

Q. 12. Have you, and if so, will you please produce an adding machine like the ones that you say have been so sold, indicating the machine by number if it bears one?

A. I have and herewith produce same. The number is 2082.

Q. 13. Have you, and if so, will pou please produce any invoice of the sale of this machine?

A. I have such invoice, and herewith produce same.

Q. 14. I note that the invoice runs to Howson & How-

Deposition of Plaintiff's Witness, Harry B. Wyeth, stipulated in from Massachusetts Case.

son. Did you obtain the machine from said firm of Howson & Howson?

A. Yes.

The machine identified by the witness is offered in evidence and the notary is requested to mark the same Complainant's Exhibit, "Defendant's Machine."

The invoice produced and identified by the witness as relating to said machine is offered in evidence as "Complainant's Exhibit Invoice of sale of the Exhibit 'Defendant's Machine';" and the notary is requested to copy the said invoice into the record:

"THE ADDER MACHINE COMPANY,
MANUFACTURERS OF
WALES ADDING MACHINES,
Wikes-Barre, Pa.

Sept. 28, 1906.

Sold to Howson & Howson,
Philadelphia, Pa.

Terms Cash.

---

1 Wide Carriage Wales Adding Machine, No. 2082, $325.00

Wales Adding Machine No. 2082 is guaranteed for a period of one year from date hereof. Should it get out of order through ordinary usage or from defective parts during that time, the machine will be repaired free of charge to the owner.

THE ADDER MACHINE COMPANY,
By A. S. HERRMAN, *Secy.*

Adder Machine
Company.
Paid Nov. 5, 1906.
Per A. S. H.
Invoice No. 1821.

Make all checks payable to the company.

By Counsel for the Defendant: The exhibits are objected to on the ground that neither they nor the testimony of the witness relating thereto tend to

Deposition of Plaintiff's Witness, Harry B. Wyeth, stipulated in from Massachusetts Case.

prove any sale within the District of Massachusetts as alleged in the bill, but no objection is made to the introduction of the exhibit entitled "Invoice of sale" on any other ground.

Q. 15. Please state how recently, and prior to the month of March of the present year, the defendant corporation has been selling machines like the Complainant's Exhibit "Defendant's Machine" in the State of Massachusetts or City of Boston?

A. I know of one particular sale made in June, 1906, another in January of the same year, a third in December of 1905, and could possibly locate others if necessary.

Q. 16. Have you recently seen the office of the defendant company in Boston, Mass.?

A. I have not been in Boston for any length of time that I recall since last fall, but I have met Mr. W. H. McFarland several times since then at various places and been told by him that he was still located at the same place in the same business. I saw him about the first of June of this year and possibly since.

Counsel for defendant objects to the answer as stating hearsay and as further being incompetent for the reason that the statement of an alleged agent has no effect in enlarging his authority.

Q. 17. Have you and can you produce any recent advertisement of the defendant company in any current periodical, and if so, please indicate the page on which you find such advertisement in any copy of such periodical that you produce?

Counsel for Defendant: Objected to as irrelevant.

A. I produce a copy of Office Appliances for May, 1907, on page 78 of which appears an advertisement of the Adder Machine Company of Wilkesbarre, Pa.

The periodical identified by the witness is offered in evidence as "Complainant's Exhibit, Advertisement of Defendant in periodical of May, 1907."

Deposition of Plaintiff's Witness, Harry B. Wyeth, stipulated in from Massachusetts Case.

Counsel for Defendant: Objected to as incompetent, irrelevant and immaterial.

Cross-Examination by Mr. Baird.

X. Q. 18. When you said you knew the defendant corporation, what did you mean by that?

A. I mean that I know there is such a corporation, I know its officers, or some of them and in general have such knowledge as one may be ordinarily said to have of a corporation.

X. Q. 19. Please state what you know as contrasted with what you may believe or think with reference to this company?

A. As I understand the term, I am stating what I know.

X. Q. 20. Did you ever make any investigation yourself concerning the incorporation of the defendant company to ascertain whether it was a company or not, and who its officers were or are?

Objected to as not proper cross-examination. The counsel have stipulated that the defendant is a duly organized and existing corporation.

A. Yes. I have had commercial agency reports on the corporation. I have read their answer in this suit and in various other ways have satisfied myself in the matter.

X. Q. 21. You have stated that the defendant company has a sales agency at Boston, Mass. How do you know that?

A. By knowing the agent of the company in Boston, by knowing his and its methods of advertising, by knowing the lettering on its sales office door, by knowing where its machines have been sold by its agent in Bos-

Deposition of Plaintiff's Witness, Harry B. Wyeth, stipulated in from Massachusetts Case.

ton, by seeing such machines and possibly in other ways that I have not tried to enumerate.

X. Q. 22. Have you ever been present when a sale has been made by the defendant corporation at Boston or anywhere else in Massachusetts?

A. No, sir.

X. Q. 23. You have stated that the sales agency which you have mentioned is the place of business of the defendant company in the City of Boston. How do you know that?

A. The door of such office is marked as the office of such corporation.

X. Q. 24. Where is it?

A. It is in the Old South Building at Boston.

X. Q. 25. Is that at the corner of Washington and School street?

A. I cannot say, I am not at all familiar with street names in Boston.

X. Q. 26. What was the inscription on the door that you refer to?

A. I have an exact copy of this inscription at my office, and if desired, I will produce same to be exact. My recollection is that it read "Adder Machine Company, W. H. McFarland, Sales agent."

X. Q. 27. Did you copy such inscription yourself?

A. Yes.

X. Q. 28. What made you do that?

A. So that I might be prepared to answer a question with regard to it if called upon to do so when I testified.

X. Q. 29. When did you make that copy?

A. It was upon one of my visits to Boston, the exact

Deposition of Plaintiff's Witness, Harry B. Wyeth, stipulated in from Massachusetts Case.

date of which I do not now recall. Sometime within the past year.

X. Q. 30. And at the time you made the copy, you expected to testify about it, did you?

A. I expected that the Comptograph Company would sue the Adder Machine Company and knew that one basis for such a suit was evidence that they had an office in Boston.

X. Q. 31. Who gave you the Complainant's Exhibit marked "Circular issued by Defendant's Boston Office"?

A. My recollection is that it was either handed to me by Mr. W. H. McFarland personally, or that I picked it up while talking with Mr. McFarland from their supply of such pamphlets at the business show referred to.

X. Q. 32. From whom did you procure the Exhibit, "Defendant's machine"?

A. I do not recall whether it was shipped direct from Howson & Howson to us at Chicago, or first shipped to Boston to our agent there and then reshipped to us.

X. Q. 33. Did you request Messrs. Howson & Howson to purchase the exhibit for you?

A. No. I requested our agent in Boston to procure us a Wales machine.

X. Q. 34. Did the complainant corporation pay for this machine or did Messrs. Howson & Howson pay for this machine?

A. We did not pay the Adder Machine Company, nor did we pay Messrs. Howson & Howson, but we authorized the purchase of the machine for our account by our agent in Boston, and reimbursed him for his expenditure.

Deposition of Plaintiff's Witness, Harry B. Wyeth, stipulated in from Massachusetts Case.

Re-direct Examination by Mr. Clarke.

R.-D. Q. 35. Did Howson & Howson purchase this machine from the defendant at the request of you or your agent?

A. Yes.

R.-D. Q. 36. At the Boston Business Appliance Show to which you have referred, how was the booth or exhibit of the defendant's machines placarded or advertised?

Counsel for Defendant: Objected to as not proper re-direct examination and as leading.

A. As the booth of the Adder Machine Company.

R.-D. Q. 37. Can you now state the date of the Boston business show to which you referred this morning?

A. I can. It was October, 1906.

Re-direct examination closed.

Re-cross Examination by Mr. Baird.

R.-X. Q. 38. What was the actual placard or advertisement on the booth to which you referred?

A. I do not recall the exact placarding and lettering of that booth. It is not a matter to which I paid particular attention.

R.-X. Q. 40. But you said that it was placarded or advertised as the booth of the Adder Machine Co. As a matter of fact, did it not simply display the legend "The Wales Visible Adder" without any indicating of the company?

A. I will not attempt to state positively the exact lettering of the booth. My recollection is that the name of the Adder Machine Company appeared quite plainly.

R.-X. Q. 41. During the recess, did you look up your memorandum in order to refresh your recollection con-

cerning the inscription on the office door about which you testified this morning?

Deposition of Plaintiff's Witness, Harry B. Wyeth, stipulated in from Massachusetts Case.

A. I did.

R.-X. Q. 42. Are you now able to state what that inscription was, and if so, do so?

A. The lettering was "Wales Visible Adding and Listing Machines, W. H. McFarland, New England Agent. Made by the Adder Machine Co., Wilkes-Barre, Pa."

Re-cross examination closed.

Signature waived.

And thereupon DORR E. FELT, a witness on behalf of the complainant, being duly sworn, testified as follows in response to interrogatories of counsel:

Deposition of Plaintiff's Witness, Dorr E. Felt, stipulated in from Massachusetts Case.

Q. 1. What is your name, age, residence and occupation?

A. Dorr E. Felt, 45 years, No. 3259 Beacon street, Chicago. Occupation, manufacturer of adding machines.

Q. 2. What adding machine manufacture are you actively connected with and in what capacities?

A. Felt & Tarrant Manufacturing Company, No. 856-874 No. Paulina street, Chicago. Officially, I am president of the company and I personally superintend the manufacture of the machines, which are called Comptometers, and exercise a general supervision of the business throughout. I am also a director of the Comptograph Company, manufacturers of the Comptograph, and sometimes am consulted in regard to the mechanical end of that business.

Q. 3. Please state in a general way what kind of a machine the Comptometer is and what kind of a machine the Comptograph is?

Deposition of Plaintiff's Witness, Dorr E. Felt, stipulated in from Massachusetts Case.

A. The Comptometer is an adding machine which shows the totals on a register consisting of a series of numeral wheels. The Comptograph is the same kind of a machine except that it prints a list of the items added on the machine as well as the total of the same.

Q. 4. Who is the patentee of the patents under which the Comptometer and the Comptograph, manufactured by these respective concerns, are organized?

A. I, myself, am the patentee.

Q. 5. Please state briefly what experience you have had tending to familiarize you with the examination and consideration of adding or calculating machines, and of the specifications and drawings of patents relating thereto?

A. I have designed numbers of adding machines of different types and have frequently had occasion to examine other adding machines and adding machine patents. I have been manufacturing adding machines and selling them continuously for twenty years. I am a machinist by trade at which I worked for eight or nine years and had been employed as a draftsman before I had occasion to do that kind of work for myself. I am perfectly familiar with the examination of patent specifications and drawings relating to adding machines, having had occasion to examine them in connection with other patent litigations and in the process of prosecuting patent applications.

Counsel for complainant here states that after further consideration he has determined to withdraw and disclaim the charge of infringement of the claims 3 and 4 of Letters Patent No. 568,020 here sued upon.

Q. 6. Are you the Dorr E. Felt named as patentee in patents 465,255; 568,021; 628,176; and 661,121; here sued upon?

Deposition of Plaintiff's Witness, Dorr E. Felt, stipulated in from Massachusetts Case.

A. I am.

Q. 7. The bill of complaint in this suit refers to claims 1, 3, 6, 11, 14 and 15 of patent No. 465,255; claims 21, 35, 47, 48, 49 and 52 of patent No. 568,021; claims 1, 2 and 4 of patent No. 628,176; and claims 37, 38, 39 and 40 of patent No. 661,121. Please state whether you have examined the Complainant's Exhibit "Defendant's Machine" with respect to ascertaining whether it contains the subject-matter of the above mentioned claims.

A. I have.

Q. 8. Please state what you find to be the fact as to this, in reference to each one of these claims, taken in order; and in respect to each claim whose subject-matter you find in the said defendant's machine, please state what said subject-matter is designed to accomplish, what structures in your patent drawings represent an embodiment of such subject-matter, and what structures in the exhibit defendant's machine represent such subject-matter.

A. I will first take up patent No. 465,255.

PATENT No. 465,255.

As to Claim 1.

I find that Exhibit Defendant's machine does contain the subject-matter of this claim. In the patent the numeral wheels are numbered 4, there being one numeral wheel for each column. Each numeral wheel bears on its periphery the characters of the Arabic notation from 0 to 9, there being one numeral wheel for each column or decimal order of numbers represented in the machine. This series of numeral wheels considered as a whole constitutes the register of the machine and at all times indicates the sum of all the numbers which have been added and printed in the machine subsequent to the last can-

Deposition of Plaintiff's Witness, Dorr E. Felt, stipulated in from Massachusetts Case.

celling operation performed on it. The numeral wheel actuating mechanism is represented in the patent by the pinion 8, and the lever 11 which I will hereafter denominate as "column actuators," there being one pinion and column actuator for each numeral wheel. Each numeral wheel except the first is provided with a carrying device consisting of the pawl 27 and the lever 28, the lever 28 having mounted upon it a stop 22 to prevent over-rotation in carrying, the stop being actuated in its movement to and from the numeral wheels by the carrying lever 28. The function of this series of separate carrying devices is to carry the tens of each column to the next higher. Thus, as each numeral wheel rotates so as to carry the numbers on its periphery past the sight opening or reading line of the register in an ascending series from 0 to 9, and 0 again so that 0 again appears at the sight opening, it is necessary to rotate the next higher numeral wheel one step to register and carry the 10 thus accumulated by the initial numeral wheel. This is effected by the movement of the carrying lever toward the numeral wheel transmitted through its pawl 27 which engages with a series of ten equi-spaced teeth designated by the numeral 6 in the drawing, these teeth being fast to and a part of the numeral wheel. The carrying stop also engages these teeth to prevent overrotation of the numeral wheel. This carrying lever is impelled in its movement toward the numeral wheel and actuates the numeral wheel by means of the power stored in and exerted by the spring 31. The carrying levers 28 are retracted away from the numeral wheel against the power of their actuating springs by the movement of a rock-shaft 37, which is common to all the carrying devices, the movement of the rock-shaft being transmitted to the carrying devices through the links 36, and when retracted away from the numeral wheel, the carrying devices are held

Deposition of Plaintiff's Witness, Dorr E. Felt, stipulated in from Massachusetts Case.

in such position by the latches 32, each of which engages with a lug numbered 30 on each carrying lever 28. This latch number 32 is the detaining mechanism of the claim and holds the carrying lever in its retracted position until released from the influence of the latch 32 by a pin 34 mounted on the numeral wheel in such relation that the rotation of the numeral wheel causes it to engage the end of the latch 32 and disengage the latter from the carrying lever 28, and thus determine whether or not a carrying shall take place between any rotated numeral wheel and the next higher one. The foregoing described mechanism represents the subject-matter of the claim which reads:

> 1. "The combination, with a series of numeral-wheels and actuating mechanism therefor, of a series of separate carrying devices, each provided with an actuating-spring 31, detaining mechanism for said carrying devices, a device for releasing said carrying devices, and mechanism for retracting said carrying devices against their actuating springs, whereby the carrying is effected by power not derived from the actuating mechanism, substantially as and for the purpose specified."

Adjournment taken until ten o'clock to-morrow morning, November 5, 1907.

Met November 5th at ten o'clock in the morning, pursuant to adjournment. Present as before.

Witness continuing answer to Q. 8.

The embodiment of subject-matter of claim 1 as found in "Exhibit Defendant's machine" consists of first, the series of numeral wheels which are plainly visible at the upper back part of the machine, the case having been removed for the purpose of making the different members of the machine more readily examined. These numeral wheels constitute the register of the machine and display at all times the total of any sum which has been added into the machine subsequent to the last cancelling

Deposition of Plaintiff's Witness, Dorr E. Felt, stipulated in from Massachusetts Case.

operation. The numeral wheel actuating mechanism or column actuator consists of a pinion, one adjacent to each numeral wheel and a lever for each numeral wheel and pinion consisting of two parts, one of which lies horizontally just beneath each pinion, its end being pivoted to the other part of the lever, which extends up from the shaft on which the lever is mounted just back of and below the numeral wheels. In defendant's machine, the carrying devices are pivoted on a shaft directly beneath that on which the numeral wheels are mounted and consist of a series of levers, one for each column, which extend toward the back end of the machine from the shaft. On each carrying lever is mounted a pawl which engages with a series of notches on the numeral wheel, the numeral wheel being rotated, to effect the carrying of the tens, by means of the pawl engaging the notches, the power therefor being exerted by a spring, one for each carrying device. These springs can be plainly seen, each occupying a vertical position just back of the numeral wheel near the top of the machine. Each carrying lever is provided with a stop, which at the conclusion of the carrying movement, engages with a series of notches or projections already referred to, to prevent overrotation of the numeral wheel under the impulse of the carrying mechanism. The detaining mechanism for the carrying devices consists of a series of upwardly projecting latches, the upper ends of which may be seen just in front of the numeral wheel. The lower ends of these latches are pivoted on a shaft a little in front of and a considerable distance below the numeral wheel. On the left side of each of these latches is a projection, which, when that end of the carrying lever on which the pawl is mounted has been retracted away from the numeral wheel, engages with a lug or projection on a portion of the carrying lever which extends from its pivot shaft in an opposite direction from its pawl carrying end and

Deposition of Plaintiff's Witness, Dorr E. Felt, stipulated in from Massachusetts Case.

holds the lever in its retracted position until the same is released from the grasp or control of the detaining device by a projection on the numeral wheel coming into contact with the upper end of the detaining device and forcing it out of engagement with the carrying lever. This projection on the numeral wheel is constructed out of a piece of sheet metal mounted on a stud riveted into the side of the numeral wheel in such a manner that whenever the numeral wheel rotates from 9 to 0 this projection hits the detaining device so as to move it in a direction away from the numeral wheel and out of engagement with the carrying lever, and it constitutes a device for releasing the carrying devices. The mechanism for retracting the carrying devices against their actuating springs consists of a rocking-frame extending clear across the machine at the extreme lower back end. The rocking-frame is built up of several members, all of which operate in unison as though in one piece. Two of these members are arms which extend forward from a pivotal part of the rocking-frame and carry the other member of the rocking-frame, which consists of a rod extending across the machine, which passes through upwardly extending portions of the two arms. This rocking-frame or rock-shaft device is connected to the series of carrying devices by a series of upwardly extending loops, one for each carrying device, the upper end of each loop being attached to the carrying device, and the lower end of the loop embracing the last described shaft of the rock-shaft device. In the operation of the machine the rock-shaft device is caused to rock in such manner that its free end or portion farthest from the pivot swings up and down towards and away from the carrying levers, it being common to all of them, and in its downward movement it retracts the carrying lever away from the numeral wheel to the position where the carrying lever is engaged by the detaining device to be held

Deposition of Plaintiff's Witness, Dorr E. Felt, stipulated in from Massachusetts Case.

until the rotation of the numeral wheel shall release the carrying lever from the influence of the detaining device, whereby the carrying of the tens is effected by the power of the springs which actuate the carrying device to rotate the numeral wheels.

Summing up the foregoing description of the defendant's machine in reference to the individual clauses of the claim:

The "series of numeral wheels and actuating mechanism therefore" are what I have described as the register and the column actuator, the latter being the series of levers, each consisting of two parts.

The "series of separate carrying devices each provided with an actuating spring 31" is the series of levers, one for each column, mounted on the shaft just beneath the numeral wheel.

The "detaining machanism for said carrying devices" is represented in defendant's machine in what I have described as the series of upwardly projecting latches, the upper end of which are seen just in front of the numeral wheels.

The "device for releasing said carrying devices" is what I have described as a sheet metal projection mounted on a stud riveted in the side of each numeral wheel.

The "mechanism for retracting said carrying devices against their actuating springs whereby the carrying is effected by power not derived from the actuating mechanism" is what I have described as the rock-shaft device extending clear across the machine and built up of several members, all of which operate in unison, as though in one piece, in co-operation with the loops on the carrying levers.

Deposition of Plaintiff's Witness, Dorr E. Felt, stipulated in from Massachusetts Case.

As to claim 6 of No. 465,255.

While defendant's machine seems to contain an embodiment of the terms of this claim, I have my doubts as to whether defendant's machine really infringes this claim, and therefore I will pass on to the next claim mentioned in the question.

As to claim 6 of No. 465,255.

This claim reads as follows:

> "The combination, with numeral-wheels and actuating mechanism therefor, of spring-actuated carrying-levers, devices for detaining said carrying-levers, and devices for releasing said carrying-levers to carry the tens, substantially as and for the purpose specified."

The "numeral-wheels and actuating mechanism therefor" in this claim are the same numeral wheels with their actuating mechanism which I have described in reference to claim 1.

"The spring actuated carrying-levers" in this claim are the same carrying-levers, with their springs, which I referred to in describing the carrying-devices in claim 1.

The "devices for detaining said carrying-levers" in this claim are the latches 32 that I referred to in reference to the first claim.

The devices for releasing said carrying-levers to carry the tens are the pins 34 mounted on the numeral wheels which I referred to in reference to claim 1.

I find that defendant's machine contains the subject-matter of this claim.

The embodiment of the subject-matter of this claim 6 as found in "Exhibit Defendant's Machine" consists of:

The "numeral-wheels and column actuators therefor" are what I have described as the register and column

Deposition of Plaintiff's Witness, Dorr E. Felt, stipulated in from Massachusetts Case.

actuators, the latter being a series of levers each consisting of two parts.

In Exhibit Defendant's machine, the "spring-actuated carrying levers" are those which I have described in reference to claim 1, there being one for each column mounted on the shaft just beneath the numeral-wheels.

The "devices for detaining said carrying-levers" are the upwardly extending latches just in front of the numeral-wheels, which I have described in reference to claim 1.

The "devices for releasing said carrying-levers to carry the tens" are in defendant's machine the sheet metal projections mounted on a stud riveted in the side of each numeral wheel.

As to claim 11 of No. 465,255.

This claim reads as follows:

> 11. "The combination, with numeral-wheels 4, carrying-pawls, and actuating mechanism, of movable stops which prevent overrotation of all the numeral-wheels and mechanism which automatically moves the stops from engagement with all the numeral-wheels and resets the latter, substantially as described."

The "numeral wheels 4" of this claim have already been described in reference to claim 1.

The "carrying-pawls and actuating mechanism" are the carrying devices explained in reference to claim 1.

The "movable stops which prevent overrotation of all the numeral-wheels" in this claim are the movable stops numbered 22 in the drawings which engage with the series of pins 6 of the numeral-wheel.

The "mechanism which automatically moves the stops from engagement with all the numeral wheels and resets the latter" is as follows: The movable stops above

Deposition of Plaintiff's Witness, Dorr E. Felt, stipulated in from Massachusetts Case.

mentioned are mounted on the hub of the carrying-levers 28 and a portion of each stop projects downward, adjacent to a rock-shaft numbered 72 in the drawing. When this rock-shaft 72 is rotated, it comes in contact with the stops, swinging their pin engaging ends away from the numeral-wheels. In the operation of cancelling the machine, that is, turning all the numeral-wheels to 0 preparatory to starting to add numbers on the machine, it is necessary to disengage these stops, or any of them, which would prevent the desired rotation of the numeral-wheels, from their engagement with the numeral-wheels, and therefore this rock-shaft 72 is automatically caused to rotate so as to withdraw these stops from engagement with the numeral-wheels so that they may rotate to 0. These devices in the drawings represent the elements of claim 11.

I do find in the Exhibit Defendant's machine the embodiment of the subject-matter of this claim 11.

In the Exhibit Defendant's machine, the "numeral-wheels" of the claim are those heretofore referred to.

The "carrying-pawls and actuating mechanism" are the carrying-levers and pawls heretofore mentioned as being mounted on the shaft directly beneath the numeral-wheels.

The "movable stops which prevent overrotation of the numeral-wheels" are mounted on that portion of the carrying-lever which extends from the shaft on which the carrying-lever is mounted toward the front of the machine, one on each lever, and obstruct the rotation of the numeral-wheels in the cancelling operation unless removed from engagement therewith. These stops are located just below the front side of the series of notches or projections on the numeral-wheels with which they engage, there being one of these stops for each numeral-wheel. These stops are so positioned with reference to

Deposition of Plaintiff's Witness, Dorr E. Felt, stipulated in from Massachusetts Case.

the other members of the machine that whenever a cancelling operation is being performed, one end of the lever which constitutes the column actuator and which has a pin riveted into one side of it to normally impinge against the stop and hold it in engagement with the numeral-wheel, carries the pin away from the stop, so that under the influence of a spring attached to the stop, the stop is automatically carried out of engagement with the numeral-wheel, thus permitting the rotation of the numeral-wheel to the zero point.

As to claim 14 of No. 465,255.

This claim reads as follows:

> 14. "The combination, with recording devices and actuating mechanism therefor, of hammers 87, said hammers, separate devices for releasing each hammer from the actuating mechanism of its recording-disk, and devices for releasing all hammers to the right of the one released, whereby the zeros are recorded automatically, substantially as and for the purpose specified."

In the patent one embodiment of the subject-matter of this claim 14 consists of the following:

The "recording devices and actuating mechanism therefor" consist of recording disks or type heads numbered 81 in the drawing and the levers 11 and 16 by which they are actuated, to bring the proper type figure in each column to the printing line for the purpose of recording on the paper the digits corresponding to the keys touched in each column. These levers 11 are what I have heretofore described as column actuators, the levers and type heads being so connected that they move in unison.

The "hammers 87" of the claim are clearly shown in the drawings and serve to make the impression on the paper by a blow which forces the type, the ribbon and

Deposition of Plaintiff's Witness, Dorr E. Felt, stipulated in from Massachusetts Case.

the paper into contact so as to make a print of that figure on the type head which has been brought to the printing line by the operation of the machine.

The "springs 88 for said hammers" in the claim are clearly shown in the drawing. There is one for each hammer which serves to actuate the hammer in its delivery of the blow to make the impression.

The "detaining devices for said hammers" of the claim are the pawls 89, clearly shown in the drawings, there being one pawl for each hammer.

The "separate devices for releasing each hammer from the actuating mechanism of its recording disk" are the levers 86, one for each column, extending upwardly from the levers 16. This lever 16 serves to determine the position of the type-head and what type number on the type-head shall be presented at the printing line, this being in each case that type number which corresponds to the number of the key depressed.

In the claim "the devices for releasing all hammers to the right of the one released whereby the zeros are recorded automatically" are the pins 93 shown in Fig. 22 of the patent and also in Fig. 8 of the drawing, projecting out from one side of each hammer pawl 89 beneath a portion of the next adjacent hammer pawl to the left, or of higher order, in such manner that should the next pawl to the left be actuated out of engaging position with the hammer it will also carry the pawl to the right of it by reason of coming into contract with the pin, carrying it out of its engaging position with the hammer, and that pawl to the right will also, by reason of coming in contact with the pin on the next pawl to the right of that, release the next pawl, and so on, clear across the machine towards the right, thus freeing all hammers to the right of that highest column or decimal order of numbers in which a key has been depressed, to print or fill in the

Deposition of Plaintiff's Witness, Dorr E. Felt, stipulated in from Massachusetts Case.

ciphers without the necessity of having to touch a key for any of the ciphers.

I find in Exhibit Defendant's machine the subject-matter of this claim 14. In the Exhibit Defendant's machine the "recording devices and actuating mechanism therefor" consists of the type heads plainly visible at the back end of the machine near its top, each type-head being actuated so as to bring a type figure corresponding to the key depressed, to the printing line in readiness for making the proper type figure impression. The actuating means consists of an arm of the column actuator heretofore described, together with a series of horizontal levers positioned beneath the keys and serving through their connection with the keys to operate stops which limit or determine the amount of movement which the column lever shall make, and thus determine which type figure on each type-head shall be positioned at the printing line.

Adjournment taken until tomorrow morning at 10 A. M., November 6, 1907.

Met November 6th, at ten o'clock in the morning, pursuant to adjournment. Present, as before.

Witness continuing answer to Q. 8.

An embodiment of the hammers 87 of the claim is represented in "Exhibit Defendant's machine" by nine hammers which are pivotally mounted on a short rock-shaft extending only part way across the machine and located just forward of the type heads above referred to, that is in a direction towards the numeral-wheel. This rock-shaft is located nearly on a level with the type figures 9 on the type-head. This rock-shaft is so formed that a portion of it consists of another small shaft or rod parallel to the pivot shaft of the rock shaft, this rod being so connected to and positioned with reference to the pivot-shaft of the rock-shaft that when the rock-shaft

Deposition of Plaintiff's Witness, Dorr E. Felt, stipulated in from Massachusetts Case.

is rotated in one direction the rod impinges against the hammers, pressing them back against their actuating springs to a point where they are caught and held by detaining devices until released to strike the blow under the impulse of their actuating springs in proper time for printing on the paper. The rock-shaft is rotated by means of a lever and a series of connecting links which connect it to the main operating lever of the machine.

The "springs 88 for said hammers" in the claim are the impelling springs referred to in the last paragraph as actuating the hammers, there being one for each hammer. The top end of these springs are plainly visible near the top of the machine and about half way between the type-heads and the numeral-wheels. The other end of these springs is hooked to a piece of sheet metal which, in turn, is pivotally connected to the hammer.

The "detaining devices for said hammers" of the claim consist of a series of nine pawls, one for each hammer, which are pivoted on a short shaft immediately in front of the number 9 type figures on the type-heads. These detaining devices or hammer-pawls are normally pressed towards engaging position with notches on the hammers by a series of springs, one spring for each hammer pawl. These springs stand vertically in the machine just in front of the figure 9 to figure 4 of the type-heads.

The "separate devices for releasing each hammer from the actuating mechanism of its recording disk" are represented in Exhibit Defendant's machine by a series of vertical pieces of sheet metal immediately in front of the upright stems of the type heads. The movement of these metal strips, which is vertical, is controlled by the column-actuators heretofore referred to in such manner that when any column actuator, for instance, the third one from the right of the machine, is moved out of its normal position, the metal strip of that column travels

Deposition of Plaintiff's Witness, Dorr E. Felt, stipulated in from Massachusetts Case.

upward a short distance, the upper end of it impinging against the hammer pawl and rotating the hammer pawl out of its engaging position with the hammer, thus permitting the hammer to strike a blow under the impulse of its spring.

The "devices for releasing all hammers to the right of the one released, whereby the zeros are recorded automatically," consist of a pin or lug located on the under side of each hammer-pawl and extending towards the left of the machine under a portion of the next adjacent hammer-pawl, so that whenever any hammer-pawl is rotated out of its engaging position with its hammer it comes into contact with the pin on the next adjacent hammer-pawl to the right and carries the same out of engaging position with the hammer, and the next one to the right, being thus rotated, through the pin on the hammer-pawl next further to the right also carries that one out of engaging position, so that all hammers to the right of the third column are permitted to be impelled under the influence of their actuating springs and print the ciphers in the next two columns to the right of the third one, wherein the column actuator was moved from normal position, so as to automatically record the zeros.

As to claim 15 of No. 465,255.

This claim reads as follows:

> "The combination, with recording-disks 81 and actuating mechanism therefor, of hammers 87 and pawls 89, having flanges 94, and pins 93, substantially as and for the purpose specified."

The "recording-disk 81" of this claim 15 are the type-heads referred to in reference to the preceding claim.

The "actuating mechanism therefor" are the levers 11 and 16 referred to with reference to the preceding claim.

Deposition of Plaintiff's Witness, Dorr E. Felt, stipulated in from Massachusetts Case.

The "hammers 87 and pawls 89 having flanges 94 and pins 93" are the same referred to with reference to the preceding claim, the flanges being an integral part of the pawl, plainly shown in Fig. 22 of the drawings.

I do find an embodiment of claim 15 in Exhibit Defendant's machine. In Exhibit Defendant's machine, the "recording-disks 81" are represented by the type-heads described in reference to the last claim.

The "actuating mechanism therefor" is represented in Exhibit Defendant's machine by the column actuators and their coacting mechanism heretofore described.

The "hammers 87 and pawls 89, having flanges 94 and pins 93" of the claim, are represented in Exhibit Defendant's machine by the hammers described in reference to the last claim. The hammer pawls also described in reference to the last claim have pins also described in reference to the last claim, and shoulders against which the pins and the devices for releasing the hammers impinge. In Exhibit Defendant's machine, one of these shoulders contacts with the pin when the hammer-pawl is rotated, and the other shoulder contacts with the devices for releasing all the hammers, this shoulder being located on that portion of the hammer-pawls nearest the type-heads. On each hammer-pawl of defendant's machine there are two shoulders. These shoulders have exactly the same function as the flanges 94 of the patent drawings.

PATENT No. 568,021.

As to claim 21 of 568,021.

This claim reads as follows:

> "21. The combination with the key-releasing mechanism, of a hand-lever E and mechanism connecting it to said releasing mechanism, said lever being movable to one position for operating the releasing mechanism and being also movable to an-

Deposition of Plaintiff's Witness, Dorr E. Felt, stipulated in from Massachusetts Case.

other position for locking said releasing mechanism against action, substantially as specified."

One embodiment of the "key-releasing mechanism" of claim 21 is displayed in the patent, and best shown, perhaps, in Figs. 4 and 12 of the drawing, wherein it consists of a vibrating frame, constructed of longitudinal bars D and transverse rods D^1. The rods D^1 and the bar are all fastened together and constitute a single frame, which has a movement lengthwise of the machine back and forth, the frame being supported on the upwardly extending arms of the rock-shaft D^3 and the rock-arms D^4. In the operation of the machine, when any one of the keys A are depressed, it is caught and held down by one of the latches A^4 engaging in the notch A^7 on the key-stem. The operation of the machine is such that whenever an amount has been set on the keys and the main operating lever of the machine is swung or vibrated away from its normal position, during the early part of its return to normal position the vibrating frame moves forward towards the front of the machine, and coming in contact with the pawls A^4, release the keys from their grasp, allowing them to fly back to normal position. This is the operation of the machine during ordinary adding of numbers representing varying amounts, wherein it is necessary to reset the keys for each number added. But wherever it occurs that the same number is to be added over and over, that is, repeated, the machine contains devices which render the vibrating frame inoperative, so that the keys shall not be released automatically in the operation of adding an item, and the same item may be repeated over and over as many times as desired without the necessity for resetting the keys every time, as will hereafter appear more clearly.

Deposition of Plaintiff's Witness, Dorr E. Felt, stipulated in from Massachusetts Case.

The "hand-lever E" of the claim is represented by the hand-operated lever E, best shown in Fig. 3.

The mechanism connecting it to said key-releasing mechanism is the lever D^5, mounted on the rock-shaft D^3 just described as being that on which the key-releasing frame is supported at one end. If one or more keys have been depressed, and the operator desires to release them before manipulating the main operating lever to add and print, as just described, he may do so by pressing the top end of the hand operated lever E toward the back of the machine. The hand-operated lever E being freely pivoted on the stud E^1, when the top of it is pressed toward the back of the machine the lever D^5 is swung downward, and being fast onto the rock-shaft D^3, the same is rotated so as to carry the key-releasing vibrating frame towards the front of the machine and thus release any keys which may have been depressed. The hand-operated lever E is held in its normal position, which is that shown in the drawing at Fig. 3, by the spring E^3, which holds the top of the lever against the end of a pawl or latch E^4. By swinging the pawl E^4 out of the path of the lever E, the latter will swing toward the front of the machine under the tension of the spring E^3. When the hand-operated lever E is in this position, if the main operating lever of the machine be manipulated with keys set or depressed, such keys will not be released on the return stroke of the main operating lever, and the number represented by those keys may be repeated as many times as desired by merely repeating strokes of the main operating lever of the machine. By the return of this lever E to its initial position, as shown in Fig. 3, the releasing mechanism again becomes operative.

I do find an embodiment of the subject-matter of this claim in the "Exhibit Defendant's machine."

Deposition of Plaintiff's Witness, Dorr E. Felt, stipulated in from Massachusetts Case.

In Exhibit Defendant's machine, the "hand-lever E" of the claim is represented by the long lever on the left hand side of the machine just beneath or a little to the left of directly beneath the highest order of keys. This lever stands obliquely to the base of the machine, and the upper end of it is pivoted to a crank on a rock-shaft, which rotates whenever the key on the top of the machine inscribed "error" is depressed. The other end of this hand-operated key-releasing lever is raised whenever the key on top of the machine inscribed "rep't" is depressed. If this last mentioned key be depressed and then pushed toward the back of the machine, it will remain so depressed and hold the lower end of the hand-operated key-releasing lever in an elevated position, as compared with normal position. When the key which is inscribed "rep't" is not held in its depressed position, in which position it locks the key-releasing mechanism against action, or in other words when the key marked "rep't" is in its highest position, the key-releasing mechanism is in operative condition.

The key-releasing mechanism of the claim is represented in Exhibit Defendant's machine by the rock-shaft referred to in the last paragraph. As before stated, this rock-shaft rotates whenever the key marked "error" is depressed. It also rotates whenever the key marked "rep't" is not depressed and the main operating lever of the machine is vibrated from its normal position, and then allowed to return to its normal position. This rotation of the rock-shaft taking place during the early part of the return stroke of the main-operating lever. This rock-shaft extends clear across the machine and bears on that side of it towards the front of the machine, a series of dolly-rolls, mounted on pins, one for each column, these dolly-rolls and pins also constituting a part of the key-releasing mechanism. When the shaft

Deposition of Plaintiff's Witness, Dorr E. Felt, stipulated in from Massachusetts Case.

is rotated, the dolly-rolls come in contact with a series of key latches, which in turn engage in notches with each of several series of upright bars formed out of sheet metal, one series for each column and one bar in each column for each key. In fact, each upright bar is directly connected by a lever with a key so that the bar moves up and down in unison with the key, just the same as though it were one piece of the key. Each of these upright bars, which may be seen just in front of the rock-shaft, extends up through a cross plate, reaching from side to side of the machine, and the tops of them may be seen to move up whenever a key is depressed; that is, the top of the one corresponding to that particular key. The key-latches above referred to engage in the notch above referred to in these upright bars, and hold the key in the depressed position until the key-releasing mechanism is operated either by depressing the "error" key, or by manipulation of the main operating lever of the machine.

The mechanism connecting it (the hand-operated lever) to said releasing mechanism of the claim is represented in Exhibit Defendant's machine by the crank just inside the left side frame of the machine, and mounted on the rock-shaft of the key-releasing mechanism. This is the lever above referred to to which the top of the hand-operated lever is connected.

Summing up the foregoing reference to the Defendant's machine:

The "key-releasing mechanism" of the claim is represented in defendant's machine by the rock-shaft above referred to.

The hand-lever E of the claim is represented in defendant's machine by the hand-operated lever above described as being located at the left hand side of the machine and occupying a position oblique to the base, the

Deposition of Plaintiff's Witness, Dorr E. Felt, stipulated in from Massachusetts Case.

upper end being connected to the crank just inside the frame at the left hand side of the machine, mounted on the rock-shaft of the key-releasing mechanism.

The "mechanism connecting it to said releasing mechanism" is this crank on the rock-shaft just mentioned.

"Said lever being movable to one position for operating the releasing mechanism and also being movable to another position for locking said releasing mechanism against action" is represented in defendant's machine by the hand-operated lever when in its normal position; that is, when the key marked "rep't" is in its raised position, which permits the key-releasing mechanism to operate and perform its function of releasing the keys, and by the hand-operated lever when it is in its other position with its lower end raised to a point and position at which the key-releasing mechanism is locked against action, so that any keys depressed will remain depressed throughout repeated operations of the main operating lever of the machine and avoid the necessity of resetting the keys over and over again, and the same when one number is to be repeatedly added and printed by the machine. And this hand-operated lever is moved to its raised position and dropped back to its other position by manipulation of the key on top of the machine, marked "rep't."

As to claim 35 of patent No. 568,021.

While defendant's machine seems to contain an embodiment of the terms of this claim, I have my doubts as to whether defendant's machine really infringes this claim, and therefore I will pass on to the next claim mentioned in the question.

As to claim 47 of patent No. 568,021.

47. "The combination with the carrying-levers

Deposition of Plaintiff's Witness, Dorr E. Felt, stipulated in from Massachusetts Case.

and their latches, of devices for moving the levers into position for carrying, such devices being also retracted partially immediately after thus moving the levers to allow the levers released from the latches to escape re-engagement therewith, substantially as specified."

The carrying levers and their latches of this claim are numbered B^5 and O^1, respectively, in the drawings and they are the same carrying levers and latches which I described in reference to claim 1 of patent No. 465,255. (In this prior patent the carrying lever was numbered 28 and the latch 32.) There is a carrying-lever for each column except the first or units, all of them being pivoted on the shaft B." The upper or free end of the carrying-levers vibrate to and from the numeral-wheels. The free end is pressed toward the numeral-wheel by a spring B^{10} and carries a pawl B^4 which engages with a series of notches or pins in the numeral wheel to rotate the numeral-wheel in the carrying of the tens whenever the free end of the lever moves toward the numeral-wheel. These carrying-levers are retracted away from the numeral-wheel against the power of the spring and when so retracted, are held in this retracted position until released by the latch O^1, engaging a lug on the side of the carrying lever. The latches O^1 are disengaged from the carrying-lever by a sheet metal projection on the side of the numeral-wheel O^2 which hits the latch and disengages it from the lever whenever the numeral-wheel of one column in its rotation causes the numbers on its periphery to pass from 9 to 0 past the sight opening or reading line of the register, thus permitting a carrying of the tens to one numeral-wheel to the next higher column by the movement of the carrying-lever towards the numeral-wheel under the impulse of its spring B^{10}.

Adjournment taken until ten o'clock to-morrow, November 7, 1907.

Deposition of Plaintiff's Witness, Dorr E. Felt, stipulated in from Massachusetts Case.

Met November 7th at ten o'clock A. M. pursuant to adjournment. Present as before.

Witness continuing to answer Q. 8:

"The devices for moving the levers into position for carrying, such devices being also retracted partially immediately after thus moving the levers to allow the levers released from the latches to escape re-engagement therewith" are represented in the patent by the rock-shaft N bearing a series of pins or arms O best shown at Figs. 8 and 29. This rock-shaft and its arms pivot at N and vibrate as a swinging framework so that the lower end of the arms or pins move to and from the numeral-wheel. In its operation, this rocking frame first rotates so as to carry the ends of its arms away from the numeral-wheel and the arms coming in contact with a portion of the carrying-lever moves the carrying-lever to its position farthest away from the numeral-wheel where it is caught and held by the latch O^1. It then immediately moves backward towards the numeral-wheel a very short distance so that should any latch be disengaged from the carrying-lever by reason of contact with the projection on the numeral-wheel, said carrying-lever may move towards the numeral-wheel under the impulse of its actuating spring just far enough so that the latch cannot reengage it after once being disengaged from the carrying-lever during that particular operation, of adding a number, to which the present described movement pertains. In this slight return movement, towards the numeral-wheel, of the pins, away from the carrying-lever, the movement is not great enough so as to permit the carrying-pawl on the free end of the carrying-lever to interfere with or transmit any impulse to the numeral-wheel until after all the numeral-wheels have completed their prime movement under the influence of the column actuators and have determined, by reason of contact of the projec-

Deposition of Plaintiff's Witness, Dorr E. Felt, stipulated in from Massachusetts Case.

tions on the numeral-wheels with the latches O^1, in which columns carrying of the tens shall take place. After the completion of the prime movements of the numeral-wheels, the rocking frame, consisting of the shaft N and its pin O, rocks still farther so as to carry the ends of the pins O still farther toward the numeral-wheels, and thus permits the secondary movement of the numeral-wheels, in each column where carrying is necessary, under the impulse of the carrying-spring B^{10} exerted through the carrying-lever B^5 and the carrying-pawl B^4. At the very beginning of the next succeeding operation of adding a number by means of rotating the rocking-frame to carry the ends of the pins away from the numeral-wheel, the carrying-levers B^4 are again retracted until all which have been released to effect the carrying, are again engaged and held by the latches O^1, the arms or pins O again returning slightly toward the numeral-wheels so that any carrying-levers freed, for the purpose of carrying, from the latches O^1, may remain so disengaged until after all the prime movements of the numeral-wheels have been completed, after which the rocking frame, consisting of the shaft N and the pins O, rotates again further toward the numeral-wheel to effect the necessary carrying or secondary movement of the numeral-wheel. The peculiar rocking movement of the rocking-frame which gives it three positions, one, its extreme retracted position away from the numeral-wheel, the other, that slightly returned towards the numeral-wheel from its extreme retracted position, and the other its extreme position nearast towards the numeral-wheel, is effected in the patent by means of a cam-piece N^6 in the drawings. This cam-piece is mounted on and carried on the large cam C^{10}, which in turn is pivoted on the stud C^{11}. As the cam C^{10} rotates on its pivot, carrying the cam-piece C^6 with it, the latter transmits motion to the rocking-frame heretofore described, the profile of the cam-piece being such

Deposition of Plaintiff's Witness, Dorr E. Felt, stipulated in from Massachusetts Case.

that it gives to the rocking-frame precisely the motions heretofore described. This motion is transmitted from the cam-piece to the rocking-frame through the bell-crank lever N^2, the connection N^3 and the lever N^4 fast upon the rock-shaft N.

The rocking-frame, together with the cams just described, is an embodiment of the subject-matter of that part of the claim last quoted, which reads as follows:

The "devices for moving the levers into position for carrying, such devices being also retracted partially immediately after thus moving the levers to allow the levers released from the latches to escape re-engagement therewith."

I do find an embodiment of the subject-matter of claim 47 in exhibit defendant's machine.

The "carrying-levers and their latches" of the claim are represented in defendant's machine by the carrying-levers which I described in reference to claim 1 of patent No. 465,255, as mounted on a shaft directly beneath the numeral-wheel, and carrying pawls on their free ends, which engages a series of notches in the numeral-wheels to rotate them to effect the carrying of the tens, together with the series of latches which I described in reference to the same claim as upwardly projecting latches in the machine just in front of the numeral-wheels, being pivoted at their lower ends some distance below, and serving to engage with the carrying-lever and hold them in their retracted position until released therefrom by contact of the end of the latch with one of the sheet metal projections on the corresponding numeral-wheel, thus disengaging the carrying-lever from the latch and permitting its free pawl-carrying-end to move towards the numeral-wheel and rotate the latter in the operation of carrying the tens. The pawl-carrying end of these carrying-levers extends towards the back end of the machine from

Deposition of Plaintiff's Witness, Dorr E. Felt, stipulated in from Massachusetts Case.

the shaft on which the levers are pivoted and that end is impelled in its movement toward the numeral-wheel to effect the carrying by means of a series of springs, one for each carrying-lever, occupying a vertical position and seen one just back of each numeral-wheel. Another portion of this carrying-lever projects in a direction towards the front of the machine where it is engaged by the latches. These carrying-levers are retracted to their extreme position away from the numeral-wheels by impulses communicated through a series of loops, one for each carrying-lever. The upper ends of these loops are riveted to the pawl-carrying arm or end of each carrying-lever and depend from the same, ending loops at their lower ends, which embrace a rod or shaft which is part of a rocking-frame extending across the machine, and which is pivoted on a long shaft at the lower back end of the machine, and which reaches clear across the machine from side frame to side frame. This rocking-shaft which is embraced by the loops is supported by two arms, one at either side of the machine, a little ways inside of the side frames. In upwardly projecting portions of the arms is supported the shaft or rod just mentioned as being engaged by the depending ends of the loops which are connected to the carrying-levers. These two arms project still farther toward the front of the machine, as may be plainly seen at the very bottom of the mechanism beneath the numeral-wheel, and the upper surfaces of these arms are so formed as to constitute cams. These cams co-act or engage with rollers on a swinging-shaft, which ride on the upper surfaces of these cam edges of the arms and give to the arms their movement. This swinging-shaft on which the dolly-rolls are mounted, moves backward and forward in a direction longitudinally of the machine. The arms and the lock embraced rocking-shaft supported in the upwardly extending projections thereof constitutes the swinging-

Deposition of Plaintiff's Witness, Dorr E. Felt, stipulated in from Massachusetts Case.

frame, the operation of which is precisely that of a rocking-shaft, which it would be, were the hubs of these arms joined, or were the hubs pinned to the shaft on which they are pivoted. The necessity for pinning the hubs to the shaft is obviated by the expedient of having a cam on each arm, so that the two arms move in unison as if rigidly connected. The profile of the upper or cam-edge of the extension on these arms is so formed that when the machine is operated, the swinging-frame at first swings downward, and by reason of its cross-rod above referred to, contacting with the bottom end of the loops, above referred to, retracts the pawl-carrying end of the carrying-lever away from the numeral-wheel, first to an extreme retracted position. Then the swinging-frame drops back towards the numeral-wheel a small distance, just far enough so that should any latch be disengaged from its carrying lever, by means of contact with the lug on the side of the numeral-wheel heretofore described in connection with claim 1 of patent No. 465,255, such disengaged carrying-lever will drop forward toward the numeral-wheel far enough to prevent its being re-engaged and held by the latch during the operation of again adding the number immediately concerned. Then after all the numeral-wheels have received their prime movements from their column actuators, this carrying-lever and any others which have been disengaged from the latches owing to the prime movement of the numeral-wheels, are permitted to drop forward toward the numeral-wheels to rotate them in the carrying of the necessary tens, by a still further movement towards the numeral-wheel of the swinging-frame. This swinging-frame has three positions, one its extreme downward position farthest away from the numeral-wheels, another, its position slightly removed from the one just mentioned towards the numeral-wheel, wherein it holds all carrying-levers which have been touched off from re-engagement with their

Deposition of Plaintiff's Witness, Dorr E. Felt, stipulated in from Massachusetts Case.

latches until the prime movements of the numeral-wheels have been completed, and the other position, that to which it moves to permit the carrying-levers, under the impulse of their impelling springs, to swing towards the numeral-wheels and rotate them in their secondary or tens carrying operation. Then at the next subsequent manipulation of the machine to add another number the swinging-frame retracts the carrying-levers against their impelling springs to a point where they are engaged and held by their latches, and then the swinging-frame immediately moves back toward the numeral-wheels a small distance, where it remains until, as already explained, it moves still farther toward the numeral-wheel to its position nearest the numeral-wheel.

"The devices for moving the levers into position for carrying, such devices being also retracted partially immediately after thus moving the levers to allow the levers released from the latches to escape re-engagement therewith" is represented in defendant's machine by the swinging-frame and the loops and the cams already above described and the cross rods carrying the rollers above mentioned.

As to claim 48 of patent No. 568,021.

This claim reads as follows:

> "48. The combination with the carrying-levers and their latches, of devices for moving the levers into position for carrying, such devices being also retracted partially immediately after thus moving the levers to allow the levers released from the latches to escape re-engagement therewith, and a cam device for controlling the movement of said devices for moving the levers, substantially as specified."

This claim is the same as claim 47, with the exception that claim 48 expressly mentions a cam device for controlling the movement of the carrying-levers. I have already described the other mechanism, in connection with

Deposition of Plaintiff's Witness, Dorr E. Felt, stipulated in from Massachusetts Case.

claim 47, and therefore will not need to re-describe it here.

The "cam device for controlling the movement of said devices for moving the levers," best shown in Figs. 3 and 21 of the drawings I have also already referred to in reference to claim 47, and as here shown in the patent, it represents some embodiment of a cam device adapted to give the carrying-levers the movements mentioned in the claim. This cam device consists in the patent of the cam-piece N^6 co-operating by means of a dolly-roll N^8 and its connecting mechanism which connects it with the rocking-frame pivoted at N in the drawings. This is the rocking-frame heretofore referred to as constructed of the shaft N and the pins or arms O. Normally the position of the parts is as shown in Fig. 3. The main operating lever of the machine is attached to the big cam C^{10} and in the use of the machine to add and print a number, the main operating lever is moved or swung in a direction from normal position which rotates the main cam C^{10} mounted on the stud C^{11} so as to swing the cam piece N^6 around in a direction toward the front end of the machine, and as it travels in that direction, the roll N^8 travels up over the abrupt forward end of the cam-piece until it passes the high point N^9 when it drops down onto the concentric portion of the cam-piece with reference to the stud C^{11}, along which it rides until the end of the inital stroke of the main operating lever, when the cam-piece N^6, which is pivoted at its end furthest towards the back of the machine, swings on its pivot so that its free or forward end swings inwardly towards the studs C^{11} so that on the return stroke of the main operating lever, the roll N^8 is not contacted with by the high point N^9 of the cam-piece. Just at the conclusion of the return stroke of the main operating lever, the cam-piece returns to its normal position, as shown in Fig. 3. It is while the roll N^8 passes

Deposition of Plaintiff's Witness, Dorr E. Felt, stipulated in from Massachusetts Case.

over the abrupt face or forward end of the cam-piece that the carrying-levers are being retracted by it to the position in which they are caught and held by the latches O^1, but as soon as the roll passes over the high point N^9 and the roll drops back onto the concentric portion of the cam-piece, the arms of the rocking-frame move away from the carrying-levers just far enough to prevent the re-engagement of any of the carrying-levers by their latches, as already explained in connection with claim 47.

I do find an embodiment of the subject-matter of this claim 48 in exhibit defendant's machine. I have already described and pointed out, in connection with claim 47, the mechanism in exhibit defendant's machine, which represents the subject-matter of this claim 48, even including the cam device, but I will again indicate the cam-device for controlling the movements of the devices for moving the levers into position for carrying, such devices being also retracted partially immediately after thus moving the levers to allow the levers released from the latches to escape re-engagement therewith. The cam-device in exhibit defendant's machine consists of the extensions on the two arms, one on either side of the machine, of the rocking-frame, described in reference to claim 47, the upper edges of these arms presenting such profile or form to a pair of dolly-rolls, one corresponding to each arm, that whenever the shaft on which the dolly-rolls are mounted, is vibrated in a direction to and from the front and back ends of the machine, the extensions of the arm serve as cams co-operating with the dolly-rolls just mentioned, to give the rocking-frame the necessary motion for moving the carrying-levers into position for carrying and then retracting partially to prevent re-engagement of the carrying-levers with the latches. These extensions on the two arms just referred to are simply cams and nothing else, so I will hereafter refer to them

Deposition of Plaintiff's Witness, Dorr E. Felt, stipulated in from Massachusetts Case.

as cams. By manipulating the main operating lever of the machine back and forth, they will be plainly seen at the bottom of the machine almost directly under the numeral-wheel, and the motion which they give, by co-operating with the dolly-rolls just mentioned, to the rocking-frame, will also be plainly seen. It will be seen how they cause the rocking-frame to swing downwardly at its free end, so that the cross-bar or rod of the rocking-frame contacts with the bottoms of the series of loops which connect the rocking-frame to the carrying-levers, and then after reaching the limit of its full retracting movement, away from the numeral-wheels, immediately moves back toward the numeral-wheels a little ways, where it remains until in proper time it again moves throughout the balance of its swing or travel towards the numeral-wheel and permits the desired carrying to take place. The various movements of this swinging frame and its relation to the carrying-levers can be best observed by looking in and under at the back of the machine and observing the movement of the cross-bar of the swinging-frame with reference to the loops which are attached to the carrying-levers. These cams, by their co-operation with the dolly-rolls and their connection with the swinging-frame, are the "cam-device for controlling the movements of said devices for moving the levers" of the claim.

As to claim 49 of patent No. 568,021.

This claim reads as follows:

> "The combination with the carrying-levers and their latches, of the rock-shaft N and its pins, and a cam for rocking said shaft in moving the carrying-levers, and also acting to allow it to rock back partially to give opportunity to the levers which may be released from their latches to move far enough to escape re-engagement, substantially as specified."

Deposition of Plaintiff's Witness, Dorr E. Felt, stipulated in from Massachusetts Case.

"The carrying-levers and their latches of the claim 49 are represented in the patent by the carrying-levers B^5, and latches O^5, already fully described in connection with the last two claims.

"The rock-shaft N and its pins" of the claim 49 are the rock-shafts N and the pins O already described in connection with the last two claims as the rocking-frame.

The "cam for rocking said shaft in moving the carrying-levers, and also acting to allow it to rock back partly to give opportunity to the levers which may be released from their latches to move far enough to escape reengagement" are the cam-pieces N^6 already fully described in reference to claim 48.

I do find an embodiment of the subject-matter of this claim 49 in exhibit defendant's machine.

In defendant's machine, the carrying-levers and their latches are represented by the levers pivoted on a shaft directly beneath the numeral-wheels, which I have already described as the carrying-levers together with the latches in defendant's machine, the upwardly extending ends of which may be seen just in front of the numeral-wheels, the lower ends being pivoted on a shaft or rod some distance below the numeral-wheels, these latches engaging with the forwardly projecting portion of the carrying-levers when the carrying-levers are retracted, and being disengaged therefrom by the lug on the side of the numeral-wheels whenever the numbers on their periphery pass the sight opening from 9 to 0.

"The rock-shaft N and its pins" are represented in exhibit defendant's machine by the arms of the swinging frame pivoted on the shaft reaching clear across the machine at its back end a little ways above the base board, and by the shaft or rod carried in the upwardly extending portions of these arms and the series of loops already

Deposition of Plaintiff's Witness, Dorr E. Felt, stipulated in from Massachusetts Case.

described, one for each column, each loop being attached to a separate carrying-lever.

The "cam for rocking said shaft in moving the carrying-levers, and also acting to allow it to rock back partially to give opportunity to the levers which may be released from their latches to move far enough to escape re-engagement" is represented in defendant's machine by the extensions on the arms, the upper edges of which are used as cam surfaces to rock the swinging-frame in unison as one member and as though it were one rigidly formed rock-shaft in all respects as already described in reference to claim 47, the cam-edges on the extensions of the two arms serve to give the swinging-frame a movement precisely the same as it would have if the extension on one of the arms was cut off and the hubs of the two arms pinned to the shaft on which they are pivoted. The movement which these cams give the swinging-frame is the same movement which was described, in respect to its timing and sequence and its influence on the carrying-levers, with respect to claims 47 and 48.

As to claim 52 of patent No. 568,021.

Claim 52 of the patent reads as follows:

> "52. In a calculating-machine, the combination of the numeral-wheels, the carrying-levers, a rock-shaft controlling said levers, and a hand device or lever whereby said shaft is rocked, substantially as specified."

The "numeral-wheels" of this claim are the same numeral-wheels which I described in reference to claim 1 of patent No. 465,255 and have frequently referred to heretofore.

The "carrying-levers" of this claim are the same carrying-levers which I have frequently heretofore referred to and described in connection with this patent.

The "rock-shaft controlling said levers" is the same

Deposition of Plaintiff's Witness, Dorr E. Felt, stipulated in from Massachusetts Case.

rocking-frame consisting of the shaft N and the pins or arms O which I have already frequently referred to and described in connection with this patent.

The "hand-device or lever whereby said shaft is rocked" is the main operating lever of the machine heretofore referred to and numbered C^{15} in Figs 1 and 2 of the patent. This lever C^{15} is fast to the big cam C^{10}, which, together with the big cam, rotates or vibrates back and forth on the stud C^{11}. It is by means of this hand lever C^{15} that the machine is operated. In the use of the machine, the operator first sets or depresses keys to represent a number to be added and printed, and then he gives motion and power for the operation of the machine by forcing the free end of the main operating-lever C^{15} away from its normal position and then allowing it to return to its normal position. This hand-lever being fast to the big cam when forced from normal position carries the big cam with it on which the cam-piece N^6 is mounted, forcing the dolly-roll N^8 to ride up over the cam-piece and thus rocks, as already fully explained in reference to claims 47, 48 and 49, the rocking-frame already fully described, which in turn controls the carrying-levers in the manner already described in connection with claims 47, 48 and 49.

I do find an embodiment of the subject-matter of this claim 52 in exhibit defendant's machine.

Exhibit defendant's machine is a calculating machine.

In exhibit defendant's machine there is a series of "numeral-wheels" as already pointed out and described. It contains a "series of carrying-levers" already frequently referred to and described in the precedingly considered claims.

The rock-shaft controlling said levers is represented in defendant's machine by the rocking-frame which I have

Deposition of Plaintiff's Witness, Dorr E. Felt, stipulated in from Massachusetts Case.

already pointed out and described in connection with claim 47.

The "hand-device or lever whereby said shaft is rocked" is represented in defendant's machine by its main operating lever on the right hand side of the machine. This lever is pivoted on the outer right hand end of a large shaft extending clear across the machine near the base board of the machine and almost directly under the row of the number 7 keys. Mounted on this shaft are two levers, both of which are fast to the shaft so as to swing or rotate with it. These levers are located on the shaft just inside the frame sides, one at each side of the machine and on their ends are pivoted a pair of long bars or connection rods, which connecting rods extend back and embrace a shaft extending from side to side of the machine. This shaft is supported in the lower end of a pair of rock-arms which in turn are pivoted on another rather large shaft extending from side to side of the machine and supported in bearings in the side frames just above the front ends of the cams for rocking or giving motion to the rocking-frame which pertains to the carrying-mechanism. This shaft to which the back end of the two connecting rods just mentioned are attached is coupled to the one I have heretofore described as moving towards and from the front end of the machine and carrying the dolly-rolls which ride on the cam faces of the cams and thus give the rocking-frame its various movements and positions heretofore described. It is the connection of this shaft carrying the dolly-rolls, as just described, with the main operating lever, which gives the rocking-frame its motion, which rocking-frame in turn controls the movements of the carrying-lever.

Adjournment taken until ten o'clock, November 8, 1907.

Met November 8th at ten o'clock A. M. pursuant to adjournment. Present as before.

Deposition of Plaintiff's Witness, Dorr E. Felt, stipulated in from Massachusetts Case.

Witness continuing answer to Q. 8:

PATENT No. 628,176.

As to claim 1 of patent No. 628,176.

This claim reads as follows:

> "The combination with the printing mechanism adapted to print two or more characters side by side, of a laterally-movable paper carriage, devices for feeding the paper longitudinally mounted in said carriage, and automatic mechanism acting in any position of the carriage to actuate said feeding devices in the line-spacing movements, substantially as specified."

The specification of this patent relates that "The machine embodies the usual numeral-wheels and their operating devices—such, for instance, as those shown in Patent No. 568,021, granted to me September 22, 1896." This patent is for a machine designed to print numbers of vertical parallel columns of items on a sheet of paper in which the feed of the paper while printing any particular column is vertical only, the machine automatically printing units under units, tens under tens, hundreds under hundreds, and so forth, without any attention of the operator being required to insure the proper printing of the numbers in any column so that each will fall in proper denominal order with reference to units, tens, and so forth. Patent No. 568,021 is the one in which the claims just last treated of are contained. It shows the computing mechanism referred to in patent No. 628,176. Some parts of this computing mechaism appear in broken lines in this patent No. 628,176. The patent No. 568,021 displays a printing and calculating machine, which in its printing function simply prints a single column of num-

Deposition of Plaintiff's Witness, Dorr E. Felt, stipulated in from Massachusetts Case.

bers on a long strip of paper feeding off of a roll of paper and its use results in the production most frequently of very long lists of numbers which are inconvenient to file or read and for various other reasons are found to be very unsatisfactory in practice. The patent No. 628,176 displays a machine devised to overcome this difficulty by printing the lists in a plurality of vertical parallel columns of numbers on a wide sheet of paper in a manner which is both convenient and practical for the operative in use, while correctly adding the sum thereof.

As stated in the specification of the patent 628,176, the tabulating machine to which that patent relates contains the same computing mechanism as does the prior patent No. 568,021.

"The printing mechanism adapted to print two or more characters side by side" of the claim are the type heads 20 and their actuating mechanism of the patent No. 628,176, these being the same type heads which I have heretofore referred to, and which are numbered F in the patent 568,021. The machine contains a series of these type heads, one for units, one for tens, one for hundreds and so forth. The units always print units and the tens always tens and so on throughout the series, each of the side by side type heads or segments performing its function to print the numbers pertaining to that decimal order of numbers to which it pertains in co-operation with the calculating mechanism which also adds the totals of the numbers printed.

The "laterally movable paper carriage" of the claim is represented in the patent drawings by the bars A, A^1, rigidly connected to one another at their ends by the heads A^2, A^3, A^4 and A^5, in which latter are counted the paper supporting and feeding rolls B, B^1 and B^2. During the operation of the printing of a column of numbers on a sheet of paper, this paper carriage has no movement

Deposition of Plaintiff's Witness, Dorr E. Felt, stipulated in from Massachusetts Case.

laterally. The paper carriage is so devised and arranged with respect to the type heads and computing mechanism of the machine that after the completion of one column of numbers on the paper it may be shifted laterally to print another column of numbers pertaining to the same list, and then still another column and so on to the completion of the printing and adding of all the numbers of the list.

The "devices for feeding the paper longitudinally mounted in said carriage" of this claim 1 is represented in the patent by the paper supporting rolls just mentioned as mounted in the carriage.

The "automatic mechanism acting in any position of the carriage to actuate said feeding devices in the line-spacing movements" is represented in the patent by the automatic line-spacing mechanism which serves to rotate the paper-feeding rolls in any position of the carriage in its sideways movement with respect to the adding and printing mechanism of the machine. In the form shown in the patent it consists of the splined shaft C^4 extending from side to side of the machine and bearing on its right hand end a gear, which meshes with an idler gear C^6, which idler gear in turn meshes with a gear on one of the paper feeding rolls. This first mentioned gear C^5 mounted on the end of the splined shaft is fast to and rotates with the splined shaft. Just within one of the side frames of the machine and embracing the splined shaft is a ratchet wheel C^3 so mounted and controlled with reference to the rest of the machine that the ratchet wheel may not have any sideways or lateral movement, but being feathered to the splined shaft, it will in rotating, rotate the splined shaft with it, the splined shaft being free to slide sideways through the axis of the ratchet, thus communicating to the paper feeding rolls when the ratchet is rotated a rotary movement serving to feed the

Deposition of Plaintiff's Witness, Dorr E. Felt, stipulated in from Massachusetts Case.

paper up line by line. This ratchet wheel in turn is actuated by a pawl C, which pawl C' in turn is mounted on a stud C' which passes from the pawl out through the side frame and in turn is rigidly mounted on the bar 29, which in turn is mounted on the big cam 7 which was fully described in reference to patent No. 568,021 as being fast to the main operating lever of the machine which is manipulated to add and print numbers. From the foregoing description, it is obvious that whenever the operator manipulates the main operating lever to print a number the paper will be automatically fed up one line regardless of the position laterally of the paper carriage, automatically positioning the paper for printing the units under units, tens under tens, and so forth.

I do find in exhibit defendant's machine the embodiment of the subject-matter of claim 1 of this patent.

The "printing mechanism adapted to print two or more characters side by side" of the claim is represented in defendant's machine by the series of type heads and their actuating mechanism, which type heads may be seen as already described at the back end of the machine. By touching a number of the keys, for instance, 880, and manipulating the main operating lever of the machine, the type heads in the columns corresponding to those in which keys were touched will rise up in plain view, to position, in each of the three columns concerned, type figures on the type heads at the printing-line in readiness to be printed on the paper together with the cipher in the unit column which is normally present at the printing-line.

The "laterally-movable paper-carriage" of the claim is represented in defendant's machine by a couple of long square bars which may be seen at the back end of the machine running parallel to and just back of the large rubber roll, together with a long cast iron piece, all of

Deposition of Plaintiff's Witness, Dorr E. Felt, stipulated in from Massachusetts Case.

which are joined together by a couple of head pieces, one at each end of the bars, which head pieces are made out of stamped sheet metal. The rubber roll mentioned is mounted to rotate in the head pieces and co-act with a small rubber roll just beneath the large one to support and feed the paper in its line-spacing or vertical movement. This paper carriage is so mounted on the frame work of the adding and printing machine that it may be moved laterally so as to present in front of the type, in readiness to be printed upon, different vertical zones of the paper, each corresponding to a column of numbers, so that vertical parallel columns of numbers may be printed thereon as the paper feeds upward with units automatically falling under units and tens under tens, hundreds under hundreds, and so forth.

The "devices for feeding the paper longitudinally mounted in said carriage" of the claim are represented in defendant's machine by the small rubber roll and the large rubber roll just mentioned as being mounted in the head pieces of the paper carriage, the same serving when rotated to feed the paper up in the line-spacing movement.

The "automatic mechanism acting in any position of the carriage to actuate said feeding devices in the line-spacing movements," are represented in defendant's machine by a ratchet mounted on the right hand end of the big rubber roll and the following described actuating means. This ratchet is engaged by a pawl which may be seen just beneath the ratchet. The lower end of this pawl is pivoted to an arm, which arm or crank is in turn rigidly fastened to the end of a long shaft, extending from side to side of the paper carriage and mounted in the lower back corner of the head of the paper carriage heretofore referred to. When this long shaft is rotated back and forth the end of the pawl engages the ratchet

Deposition of Plaintiff's Witness, Dorr E Felt, stipulated in from Massachusetts Case.

and serves to rotate it and the large rubber roll to feed the paper up in the line-spacing movement. This long shaft has depending from it a series of pins or arms, the ends of which carry a slender bar of metal reaching practically from end to end of the shaft, the whole serving to operate as a rock shaft or rocking-frame. This slender bar of metal impinges against a long longitudinal bar extending out of the back of the machine beneath the paper carriage. The other end of this bar extends into the machine and embraces a shaft on the rocking-frame, which I described as pertaining to the shaft on which are mounted the dolly-rolls which coact with the cams of the carrying actuating mechanism. As already described, in reference to claim 52 of patent No. 568,021, this rocking-frame which carries the dolly-rolls is in turn connected to arms mounted on the large shaft in the bottom of the machine on which the main operating lever is mounted.

The manipulation of the main operating lever causes this rocking-frame with the dolly-roll to swing back and forth. The longitudinal bar already mentioned has one end connected to this frame. Its other end extends out to the back of the machine under the paper carriage and impinges against the slender bar of metal carried on the ends of the pins, or arms, projecting out of the sides of the long shaft; on an arm of which shaft the pawl which coacts with the ratchet is in turn mounted. When the main operating lever is manipulated, the longitudinal bar has a movement in line with its axis, which is transmitted to the slender bar of metal, thus rotating the shaft which carries the paper feeding pawl and its arm and thus automatically rotating the large rubber roll to feed the paper in its line-spacing movement. This longitudinal bar extending out of the back end of the machine, already described as impinging at its back end against the slender bar of metal or transverse bar at the bottom

Deposition of Plaintiff's Witness, Dorr E. Felt, stipulated in from Massachusetts Case.

of the paper carriage, not being rigidly connected thereto, permits the transverse bar to pass freely from right to left or *vice versa* past the end of the longitudinal bar, and thus while one transmits motion to the other, their connection does not interfere with the movement of the paper carriage from right to left or *vice versa,* and it is obvious, as it will appear from an examination and operation of the machine, that the paper is fed upward in its line-spacing movements in any position of the carriage to the right or the left with respect to the type heads and computing mechanism of this machine. It is also obvious that exhibit defendant's machine is a computing machine or calculating machine.

I have thus shown that there is in "Exhibit Defendant's machine" printing mechanism adapted to print two or more characters side by side consisting of the type heads and their coacting parts.

"A laterally movable paper carriage" represented in the two square bars, the long casting and the two heads joining them together.

"Devices for feeding the paper longitudinally mounted in said carriage" consisting of the rubber rolls above described.

And "automatic mechanism acting in any position of the carriage to actuate said feeding devices in the line-spacing movements" consisting of the paper feeding pawl and ratchet and the mechanism connecting them with the main operating lever of the machine and serving to rotate the paper feeding rolls a line-space every time the main operating lever is actuated to add and print a number. All these mechanisms I have more specifically described above.

As to claim 2 of patent No. 628,176.

This claim reads as follows:

Deposition of Plaintiff's Witness, Dorr E. Felt, stipulated in from Massachusetts Case.

"The combination with a series of type arranged to print side by side, devices for impressing the paper upon the type, a laterally-movable paper-carriage adapted to position the paper for the different columns, feed-rolls for moving the paper longitudinally past the type, and means for actuating said rolls, substantially as specified."

The "series of type arranged to print side by side" of claim 2 are the same series of type heads described in reference to claim 1.

The "devices for impressing the paper upon the type" are the printing hammers No. 22 in the drawings of the patent and No. G in the patent No. 568,021. They are the same hammers which I previously referred to in reference to claim 14 of patent No. 465,255, wherein they are numbered 87.

The "laterally movable paper carriage adapted to position the paper for the different columns" of this claim 2 of patent No. 628,176 is the same paper carriage which I referred to in claim 1 of the same patent.

The "feed rolls for moving the paper longitudinally past the type" are the same paper feeding rolls which I have referred to in reference to claim 1 of this patent.

The "means for actuating said rolls" is the same line-spacing mechanism which I referred to in reference to claim 1 of this patent.

I do find in exhibit defendant's machine an embodiment of the subject-matter of this claim 2.

In defendant's machine the "series of type arranged to print side by side" are the same series of type heads which I referred to in reference to claim 1 as being located at the back end of the machine.

The "devices for impressing the paper upon the type" in exhibit defendant's machine are the same hammers which I referred to in reference to claim 14 of

Deposition of Plaintiff's Witness, Dorr E. Felt, stipulated in from Massachusetts Case.

patent No. 465,255 as being pivoted, in exhibit defendant's machine, on a short rack-shaft just forward of the type heads.

The "laterally movable paper carriage adapted to position the paper for the different columns" is the same paper carriage that I described and pointed out in reference to claim 1 of this patent 628,176.

The "feed rolls for moving the paper longitudinally past the type" are the two rubber rolls which I referred to as being positioned just back of the type heads in exhibit defendant's machine.

And the "means for actuating said rolls" is represented by the ratchet on the big rubber roll, its actuating pawl and the train of mechanism connecting it with the main operating lever of the machine.

This claim 2 differs from claim 1 in that it mentions the food rolls specifically as a part of the line-spacing mechanism.

As to claim 4 of patent No. 628,176.

Claim 4 reads as follows:

> "The tabulating-machine having in combination a laterally-movable paper-carriage, means for feeding the paper vertically in any position of the carriage and mechanism for shifting the carriage laterally the width of a column-space, substantially as specified."

This patent relates to a tabulating-machine, the words "tabulating machine" being used in the sense of distinguishing it from an adding and listing machine which simply prints a single column of numbers; the tabulating machine being a machine adapted to print a multiplicity of columns of numbers on a single sheet of paper.

The "laterally movable paper-carriage" of the claim is the same laterally movable paper carriage which I have described with reference to claims 1 and 2.

Deposition of Plaintiff's Witness, Dorr E. Felt, stipulated in from Massachusetts Case.

The "means for feeding the paper vertically in any position of the carriage" of the claim is the same paper feeding mechanism which I described in reference to claims 1 and 2.

The "mechanism for shifting the carriage laterally in the width of a column-space" of the claim is represented in the patent by a series of notches in the cross-bar A of the paper carriage, these notches being numbered E^9 in the patent, and coacting with a pawl E^6 in the patent, best shown in Fig. 5. This pawl E^6 is pivotally mounted on one arm of the bell crank E^4. When the bell-crank E^4 is vibrated on its pivot E^5, the pawl-carrying arm of the bell-crank engages with one of the notches E^9 and the continued swing or vibration of the bell-crank by means of the pawl engaged in one of the notches, carries the paper carriage with it until the end of the pawl impinges against one of the side frames of the machine, when, owing to the relation of the parts, one to another, the end of the pawl is wedged firmly down into the notch and prevents any further movement of the paper carriage which might be due to momentum or otherwise, thus shifting the paper carriage exactly one column space. This bell-crank lever E^4 is actuated in its vibrating or swinging movement by a connection E^3 joining it to an arm E^2, which arm E^2 is fastened to the end of the shaft E^1, which extends through the machine to the other side, where it bears an upwardly extending lever for the operator to grasp and actuate to give the paper carriage a column shift.

I do find an embodiment of the subject-matter of claim 4 in exhibit defendant's machine.

Defendant's machine is a tabulating machine. It is adapted to print a multiplicity of vertical columns side by side on a single sheet of paper.

The "laterally movable paper carriage" in defend-

Deposition of Plaintiff's Witness, Dorr E. Felt, stipulated in from Massachusetts Case.

ant's machine I have already described in reference to claims 1 and 2 as the paper carriage consisting of the two square bars of iron and the long casting, joined at their ends by the sheet metal heads.

The "means for feeding the paper vertically in any position of the carriage" of the claim, I have already described as found in exhibit defendant's machine in reference to claim 1, as represented by the ratchet on the end of the big rubber roll, the pawl coacting therewith, which pawl is mounted on an arm or crank on the end of a long shaft pivoted in the sheet metal heads of the paper carriage, this shaft being rotated to effect the line-spacing and feeding movement of the paper by means of the long transverse bar or strip of metal carried on the ends of pins firmly fixed in this shaft. This rotation of the shaft being effected by the transverse bar impinging against the outer end of a longitudinal bar sticking out of the back of the machine, which I have already described as extending into the machine where its inner end embraces a vibrating or swinging shaft or rod, which gives the longitudinal bar its motion towards and away from the front end of the machine, the whole being connected as already described with the main operating lever of the machine in such a way that every time the main operating lever is manipulated to add and print a number, the paper is fed longitudinally one line space in readiness to print the next number. This action of the paper feeding mechanism takes place every time the main operating lever is manipulated regardless of what position the carriage occupies sideways or laterally with reference to the type heads and the computing mechanism of the machine.

The "mechanism for shifting the carriage laterally the width of a column space" is represented in defendant's machine by a notched bar and coacting mechanism

Deposition of Plaintiff's Witness, Dorr E. Felt, stipulated in from Massachusetts Case.

mounted in the paper carriage already described. This notched bar is almost directly below the big rubber roll and is pivotally mounted at each end in the sheet metal heads of the paper carriage. The upper side of this bar has in it a series of notches designed to engage with a pin fast in the frame of the printing and adding machine. On the right hand end of the notched bar, just outside of the one of the heads of the paper carriage in which it is pivoted, it bears a knob. By grasping this knob and turning it so as to carry the upper or notched edge of the bar away from the pin in the frame of the machine, it becomes disengaged therefrom, when the paper carriage may be pushed or pulled in a direction sideways to the machine. On the opposite side of the paper carriage, pivotally mounted on a stud, is a lever. This stud is rigidly fastened into the sheet metal head of the paper carriage. A downwardly and forwardly projecting end of this lever is engaged by a spring designed to rotate the lever on its stud so as to throw the upwardly extending arm of this lever towards the front of the machine. The upwardly extending arm of this lever bears on the notched or upper portion of the notched bar in such manner as to tend, under the impulse of the spring just mentioned, to swing the upper portion of the bar towards the frame of the machine and cause the notches therein to be engaged by the pin fastened in the frame of the machine already described as coacting with the notches in the bar, so that whenever the notched bar is rotated out of engagement with the pins and moved far enough to prevent the pin's re-engagement with that particular notch, the power exerted by the operator to rotate or oscillate the notched bar out of engagement with the pin can be discontinued and the carriage shoved further in the same direction, until, under the impulse of the spring just described, the next

Deposition of Plaintiff's Witness, Dorr E. Felt, stipulated in from Massachusetts Case.

notch will catch on and be engaged by the pin and thus stop and hold the movement of the paper carriage exactly one column space from that which it occupied before the sideways or lateral or shifting operation of the paper was started. The operator applying a direct thrust to the released notched bar, the mechanism effects the column spacing definitely. The column spacing mechanism is so constructed that on a sheet of paper of the maximum width which the paper carriage will take, seven vertical parallel columns uniformly spaced will always be printed.

Adjournment taken until to-morrow at ten o'clock A. M., November 9, 1907.

Met November 9, 1907, at ten o'clock A. M., pursuant to adjournment. Present, as before.

Witness continuing answer to Q. 8.

PATENT No. 661,121.

As to claim 37 of patent No. 661,121.

This claim reads as follows:

> "The calculating-machine, having type and hammers for impressing the paper against the type, said hammers having hinged heads made separate from the bodies, actuating-springs attached to the heads, and means for arresting the heads before the hammers can make the impressions, substantially as specified."

This patent discloses a calculating machine, having type and hammers for impressing the paper against the type.

The "hammers for impressing the paper against the type" of claim 37 are numbered H^{14} in the drawings and are best shown at Fig. 7. There is a series of these hammers, one for each type-head, and normally they are

Deposition of Plaintiff's Witness, Dorr E. Felt, stipulated in from Massachusetts Case.

all held in their retracted position farthest from the type, as shown in Fig. 7, by a series of pawls, one for each hammer, the pawls being numbered in the drawings H^{13}. The hammers are actuated to strike the blows to make the impression on the paper in co-operation with the type by a series of springs, $H^{14}b$, one for each hammer. The springs, however, are not attached directly to the hammers, but one end of each spring is attached to a separate piece of thin sheet metal, which in turn is hinged to the hammer at A^{14}. This series of sheet metal pieces to which the spring is attached at one end are numbered in the drawing H^{14a}, best shown in Figs. 7 and 25. The other ends of the hammer impelling springs are attached to a swinging-frame S, which in turn is mounted on a short cross-bar supported in the frame of the machine. The hammers H^{14}, which are pivoted on the shaft A^{14} when freed from the pawls, are impelled by the springs, the impulses of which are communicated through the thin sheet metal pieces H^{14a} until the free end of its hammer-body almost reaches the type, when the sheet metal piece H^{14a} contact with a shaft $H^{14}d$, which stops the furthe motion of the sheet metal pieces, after which the hammer under the influence of the momentum thus acquired, c tinue in their movement until they deliver the bl which makes the type impression on the paper. The th sheet metal pieces being stopped in their movement by the shaft $H^{14}d$ before the time when the hammers reach the point where they make the impression, relieve the hammer from the direct tension of the springs just at the conclusion of the hammer movement, so that after striking the hammer drops back a short ways from the type, which action results in cleaner and better printing.

The "hinged heads made separate from the bodies" of the claim is represented in the drawings by the thin

Deposition of Plaintiff's Witness, Dorr E. Felt, stipulated in from Massachusetts Case.

sheet metal piece H^{14a}, which is hinged to the hammers at A^{14}.

The "actuating springs attached to the heads" are the springs H^{14b}.

The "means for arresting the heads before the hammers can make the impressions" of the claim is the shaft H^{14d}, which is common to all the heads.

I do find an embodiment of the subject-matter of this claim 37 in Exhibit Defendant's machine.

The Exhibit Defendant's machine is a calculating machine, having type and hammers for impressing the paper against the type.

The hammers for impressing the paper against the type are the same hammers heretofore referred to and described with reference to claims 14 and 15 of patent No. 465,255, as being positioned on the short shaft just in front of the type heads in a direction towards the numeral wheels. There is one hammer for each column in the machine. By setting the 9 key in the highest or left hand column of the machine and manipulating the main operating lever while looking under the left hand bbon spool from the left hand side of the machine, a ank having two arms and fastened rigidly on the end f the short hammer shaft just mentioned will be seen to rotate the hammer shaft. If, in the manipulation of the main operating lever, its handle is pulled until the main operating lever almost but not quite completes its movement towards the front of the machine, one can perceive by looking into the machine in the manner just described that portion of the series of hammers which project downwardly and forwardly from the hammer shafts just mentioned. One will also perceive pivoted to the hammer furthest towards the left hand side of the machine a small member or head made out of sheet

Deposition of Plaintiff's Witness, Dorr E. Felt, stipulated in from Massachusetts Case.

metal. This member has two portions, one of which extends down either side of the hammer, the two being joined by a pin extending through a hole in the hammer considerably larger than the pin. There is one of these sheet metal members for each hammer. To each of these sheet metal members is attached a spring, the other end of the spring being attached to a rocking frame pivoted on a short shaft at the top of the machine about half way between the numeral-wheels and type heads. These are the impelling springs for the hammers, there being one for each hammer, the upper ends of which can be readily seen all close together and just back of the numeral wheel. In these sheet metal members about midway between the ends which are hinged to the hammers and the end to which the springs are attached, there is a slot in each. This slot embraces a short shaft, the end of which can be readily seen by looking in from the right hand side of the machine, about an inch from the hammer shaft in a direction towards the numeral-wheel. The slots in the sheet metal member are just long enough to permit the springs to impel the hammers by impulses exerted through the sheet metal members to a point where the striking end of each hammer, which extends upwardly from the hammer shaft, almost reaches the point where it delivers the blow to make the impression, when the end of the slot contacting with the short shaft embraced by the slot in the sheet metal member, prevents further movement of the sheet metal member, and after which the hammer travels on under the influence of the momentum thus acquired from the spring and delivers the blow to make the impression. The hammer is permitted to move on to make this impression after the sheet metal member has been stopped by the shaft owing to the fact that the hole where the sheet metal member is hinged to the hammer is much larger than the pin

Deposition of Plaintiff's Witness, Dorr E. Felt, stipulated in from Massachusetts Case.

which I described above as joining the two sides of the sheet metal member, one on either side of the hammer, together at the point where the hammer and the sheet metal member are hinged together.

The "hinged heads made separate from the bodies" of the claim are these sheet metal members which I have just described.

The "actuating springs attached to the heads" are the hammer impelling springs which I have just pointed out as being seen at their upper ends close together and attached to a rocking frame just back of the numeral-wheel.

The "means for arresting the heads before the hammers can make the impression" is the short shaft which I have described as being located about an inch forward of the hammer-shaft and embraced by the slots in the thin sheet metal members against one end of which slots it impinges to arrest the movement of the same.

As to claim 38 of patent No. 661,121.

Claim 38 reads as follows:

> "In a machine for printing numbers, the combination with the type, of swinging hammers having their heads made separate from their bodies, springs attached to the heads and through them actuating the bodies, and means for arresting the heads before the making of the impressions, substantially as specified."

Obviously this patent discloses a machine for printing numbers.

The "type" of the claim 38 is represented in the patent by the type-head J^1 in the drawings.

The "swinging hammers having their heads made separate from their bodies" are the same hammers H^{14} which I have already pointed out and explained with

Deposition of Plaintiff's Witness, Dorr E. Felt, stipulated in from Massachusetts Case.

reference to claim 37 of this patent and frequently heretofore referred to in this deposition, their heads being the thin sheet metal pieces H^{14a}.

The "springs attached to the heads and through them actuating the bodies" are the springs heretofore described numbered H^{14b} in the patent, already pointed out in reference to claim 37.

The "means for arresting the heads before the making of the impressions" is the shaft H^{14d}, already pointed out and described in reference to claim 37.

I do find in the Exhibit Defendant's machine an embodiment of the subject-matter of this claim 38.

The Exhibit Defendant's machine is obviously a machine for printing numbers.

The "type" of the claim is represented in defendant's machine by the type-heads heretofore frequently referred to.

The "swinging hammers having their heads made separate from their bodies" are the same hammers located on a short shaft in the back end of defendant's machine which I have already pointed out in reference to claim 37, and their heads are the members formed of thin sheet metal which I have already described as being hinged at one end to the hammers and at the other end to the hammer impelling springs.

The "springs attached to the heads and through them actuating the bodies" are the same hammer impelling springs which I pointed out in reference to claim 37.

The "means for arresting the heads before the making of the impression" is the same shaft embraced by slots in the heads designed to stop the motion of the heads before the hammer delivers its blow, already pointed out and described with reference to claim 37.

As to claim 39 of patent No. 661,121.

Deposition of Plaintiff's Witness, Dorr E. Felt, stipulated in from Massachusetts Case.

This claim reads as follows:

> "39. In a machine for printing numbers, the combination with the type of swinging hammers composed of hinged heads and hinged bodies, the actuating-springs being attached to the heads, and the heads adapted to actuate the bodies, and means for arresting the heads before the completion of the stroke, substantially as specified."

Obviously this patent relates to a machine for printing numbers.

The "type" of this claim are the same type numbered J^1 in the drawings which I mentioned in reference to the preceding claim.

The "swinging hammers" of claim 39 are the same swinging hammers which I have pointed out and described in reference to claims 37 and 38 and which swing on the pivot A^{14}, their hinged heads being numbered H^{14a} and their hinged bodies numbered H^{14}.

The "actuating spring being attached to the heads and the heads adapted to actuate the bodies" of the claim is represented in the patent by the actuating springs H^{14b}, the heads H^{14a}, the latter being adapted to actuate the bodies of the hammers in the manner already explained in reference to claim 37.

"The means for arresting the heads before the completion of the stroke" is the same shaft H^{14d}, already pointed out in reference to claims 37 and 38.

I do find in Exhibit Defendant's machine an embodiment of the subject-matter of this claim 39. It is obviously a machine for printing numbers.

The "type" of the claim is represented in defendant's machine by the type-heads already described.

The "swinging hammers" of the claim are the same

Deposition of Plaintiff's Witness, Dorr E. Felt, stipulated in from Massachusetts Case.

swinging hammers in defendant's machine pointed out in reference to claims 37 and 38, the hinged heads of these hammers being represented in defendant's machine by the members formed of sheet metal, one for each hammer, which is interposed between each hammer and its actuating spring, and the hinged bodies of the hammers by that which I have already pointed out in reference to claims 37 and 38 as being pivoted on a short shaft just in front of the type-heads.

The "actuating-springs being attached to the heads and the heads adapted to actuate the bodies" of the claim are the same hammer springs which I pointed out and described in reference to claims 37 and 38.

The "means for arresting the heads before the completion of the stroke" of the claim is the same short shaft which I pointed out in defendant's machine as being embraced by the slots in the sheet metal members or hammer heads, the end of the shaft being visible from the right hand side of the machine and located about an inch in front of the shaft on which the hammers are pivoted.

As to claim 40 of patent No. 661,121.

This claim reads as follows:

> "40. In a machine for printing numbers, a printing-hammer made in two parts and hinged together, one part receiving the actuating power and imparting it to the other, and being itself arrested before the making of the impression, substantially as specified."

This patent obviously relates to a machine for printing numbers.

The "printing-hammer made in two parts and hinged together" of the claim consists of the same two members, H^{14} and H^{14a}, which I have already described in reference to the other claims of this patent. It is obvious that

Deposition of Plaintiff's Witness, Dorr E. Felt, stipulated in from Massachusetts Case.

one part of the printing hammer as already described receives its actuating power from the spring and imparts it to the body or other part of the hammer, the former itself being arrested before the impression is made, all of this constituting the embodiment of the parts and functions described in the language of the claim, "one part receiving the actuating power and imparting it to the other and being itself arrested before the making of the impression."

I do find an embodiment of the subject-matter of this claim 40 in Exhibit Defendant's machine.

It is obvious that the Exhibit Defendant's machine is a machine for printing numbers.

The "printing-hammer made in two parts" of the claim is represented in defendant's machine by the printing hammers, each consisting of the member formed out of sheet metal to which the spring is attached to which I have frequently referred with reference to preceding claims of this patent, and the body of each hammer which I have heretofore referred to is pivoted on the shaft just back of the type head, the two being hinged together, as already pointed out and described with reference to claim 37.

From the foregoing description of the parts in defendant's machine, when treating of claim 37, it is obvious that one part of the printing hammer consisting of the member formed out of thin sheet metal and interposed between the body of the hammer and its impelling spring, receives its actuating power from the spring and imparts it to the body or other part of the hammer, that part consisting of the thin sheet metal member itself being arrested before the printing impression is made, all of this constituting the embodiment of the parts and functions described in the language of the claim as follows:

Deposition of Plaintiff's Witness, Dorr E. Felt, stipulated in from Massachusetts Case.

"One part receiving the actuating power and imparting it to the other and being itself arrested before making of the impression."

Counsel for complainant offers in evidence all of the four patents referred to in the last foregoing interrogatory and the witness' answer thereto, and asks that they be marked "Complainant's Exhibits, Felt patent No. 465,255," "Felt patent No. 568,021," "Felt patent No. 628,176" and "Felt patent No. 661,-121."

Adjournment taken until November 11, 1907, at ten o'clock A. M.

Met Monday morning at ten o'clock in the morning, November 11, 1907, pursuant to adjournment. Present, as before.

Cross-Examination by Mr. Baird.

X. Q. 9. You have never heretofore had occasion, have you, to compare the subject-matter of a patent with the language of the claims, and then to compare the claims with another device in order to determine the similarity or dissimilarity between them?

A. I frequently have occasion to do so, but I do not recollect ever having testified in this connection before.

X. Q. 10. What interest, if any, have you in this litigation?

A. I am the owner of about 20 per cent. of the stock of the Comptograph Company.

X. Q. 11. Preparatory to testifying in this case, did you study carefully the language of the specification and claims of the four patents in suit?

A. I read carefully the claims mentioned in the bill of complaint and carefully examined Exhibit Defendant's machine to see if, in the same, there was an embodiment of the subject-matter of the claims, taking each claim separately. Being entirely familiar with all the mechan-

Deposition of Plaintiff's Witness, Dorr E. Felt, stipulated in from Massachusetts Case.

ism disclosed in the patents, I did not devote much time to a study of the wording of the specification.

X. Q. 12. Did you devote any time to such study?

A. Yes, I did.

X. Q. 13. You examined carefully, did you not, the application and claims of these four patents at the several times they were issued, or shortly thereafter?

A. I cannot say that I did give the specifications and claims of these patents a very critical examination at that time. I have no doubt I read them over.

X. Q. 14. Did you ever consider the advisability since any of these four patents has been issued of reissuing them?

A. I never did.

X. Q. 15. You understand, do you not, the construction and mode of operation of the Exhibit Defendant's machine?

A. I do.

X. Q. 16. Tell the court what, in the actual use of the machine, is the power which moves the pinions on the numeral wheels when the latter are rotated.

A. It is the power exerted by the hand of the operator applied, first, to set the keys to determine the extent of movement which the pinion shall receive, and, second, to the main operating lever of the machine.

X. Q. 17. Referring to patent No. 465,255, what is the reference character which designates on the drawing the element in claim 1 called "a device for releasing said carrying-devices"?

A. It is designated 34.

X. Q. 18. How many of the elements 34 are there in the machine illustrated in the drawings of that patent No. 465,255?

A. There are eight of them.

X. Q. 19. In claim 6 of that patent there is an element

Deposition of Plaintiff's Witness, Dorr E. Felt, stipulated in from Massachusetts Case.

described as "devices for releasing said carrying lever to carry the tens." By what reference character on the drawings are those devices designated?

A. They are designated by the number 34.

X. Q. 20. The expression, "to carry the tens," in that claim, means to carry from a wheel of one denominational order to a wheel of the next higher denominational order and not merely from the units wheel to the tens wheel; is that so?

A. It is.

X. Q. 21. What is the purpose and function of the thing which I have marked with the reference character "N" on Fig. 3 of patent No. 568,021?

A. It is a portion of the swinging framework heretofore described as consisting of the rock-shaft N bearing the series of pins or arms O which extends outside of the case of the machine to facilitate manipulation of the swinging frame during the operation of cancelling or turning the machine to zero. The arm N^4 to which the connection N^3 is attached is located inside the case, as will be seen by an examination of Fig. 2 of the patent, and I might add that it also shows in Fig. 3 of the patent, the end of the arm in Fig. 4 being dotted around at its lower end.

X. Q. 22. In your direct testimony you make the following statement:

> "In Exhibit Defendant's machine, the hand-lever E. in the claim is represented by the long lever on the left hand side of the machine, just beneath or a little to the left or directly beneath the highest order of keys. This lever stands obliquely to the base of the machine, the upper end of it being pivoted to a crank on a rock-shaft, which rotates whenever the key on the top of the machine inscribed 'error' is depressed."

Is there any connection between the stem of the "error" key and the oblique lever referred to whereby any

Deposition of Plaintiff's Witness, Dorr E. Felt, stipulated in from Massachusetts Case.

motion is communicated to the rock-shaft referred to when the error key is moved?

A. In the embodiment of the subject-matter of the claim to which the above quotation pertains, as represented in Exhibit Defendant's machine, this "error" key and the parts immediately joined to it are simply added mechanism, which communicate with the outside of the case of the machine for the operator to grasp and transmit motion to the hand operated lever described in the question, instead of having a portion of the hand operated lever extend directly outside of the case of the machine, for the operator to grasp. Its connection with the hand operated lever is such that when depressed it moves the hand operated lever in exactly the same manner as would the hand operated lever be manipulated directly if a portion of the same did extend outside of the case. The connection between the stem of the error key and the hand operated lever is not a direct one, but the operation and function is precisely the same as though the connection was a direct one.

X. Q. 23. By the expression "hand operated lever," employed in your answer, do you intend to designate the thing which is called a "long lever" in the second line of the quotation from your testimony in my question 22?

A. Yes.

X. Q. 24. In the Exhibit Defendant's machine, when the "error" key is depressed and the machine is actuated, what is the function of the long lever referred to?

A. The function then performed is that of preserving the relation between the key releasing operation and the locking function of putting the key releasing mechanism out of action.

X. Q. 25. When the operator depresses the "error" key in the Exhibit Defendant's machine and the machine is then actuated, has the function of the piece which you

Deposition of Plaintiff's Witness, Dorr E. Felt, stipulated in from Massachusetts Case.

call the long lever been changed in any manner by the depression of the "error" key, and if so, how?

A. When you depress the "error" key, holding it down, while operating the main operating lever of the machine, the hand operated lever is carried to a position where it no longer coacts with the automatic key releasing mechanism to rotate the key releasing mechanism.

X. Q. 26. Would any operator, in the normal use of the machine, hold down the error key and then actuate the main handle?

A. I do not for the moment think of any occasion where he would normally have reason to do so. In carrying this added train of mechanism extending out of the machine to enable the operator to manipulate the hand operated lever without having the latter itself extend out of the machine, the mechanic who constructed this mechanism simply had this train of added mechanism terminate by impinging directly on a stud in the crank to which the upper end of the hand operated lever is attached in stead of having it attached directly on the hand operated lever. Why this is done, I cannot presume to guess, but if the stud had been put directly into the hand operated lever for the added mechanism to impinge against, it would not have changed the operation or movement of the parts one iota, nor would it have essentially changed the functions of any of the parts. The operation as it is constructed and the movement of the parts are just the same as though the added mechanism had not been put into the machine and a portion of the hand operated lever had been extended out through the case for the convenience of the operator in manipulating the same.

Defendant's counsel makes a motion to strike out all that part of the answer after the first sentence as not responsive to the question, and as having been volunteered by the witness.

Deposition of Plaintiff's Witness, Dorr E. Felt, stipulated in from Massachusetts Case.

X. Q. 27. In the machine described in patent No. 568,021, when the hand lever E is so set that an item enumerated on the keys is repeated at each actuation of the main handle of the machine, can the item enumerated be changed wholly or partially and subsequently such changed item be repeated at each actuation of the main handle without first moving the hand lever E?

A. Yes. If the machine was set to repeat with the number 1245 represented by depressed keys on the keyboard, to change the number to 2368 all the operator would have to do would be to touch the keys representing that number, but if he wanted to set up the number 212 he could not do it without first releasing the keys previously set, by a manipulation of the hand operated lever E.

X. Q. 28. That is, you can change from a digit of a lower to a higher value in any denominational series, but you cannot change from a higher to a lower value. Is that so?

A. That is so.

X. Q. 29. Does such restriction obtain in the Exhibit Defendant's machine?

A. It does not because in defendant's machine the depressing of one key automatically releases any key previously depressed in the same column.

X. Q. 30. The reason for that is, is it not, because the "error" key has no direct connection with the thing which you call the long lever?

A. I don't see that the fact that the error key is merely added mechanism which takes the place of an extension of the hand operated lever to protrude out of the machine has anything to do with it. If a projection of the hand operated lever protruded out of the casing of the machine so that the operator could manipulate it by direct contact, this function of one key in a column auto-

Deposition of Plaintiff's Witness, Dorr E. Felt, stipulated in from Massachusetts Case.

matically releasing another key in the same column would operate precisely the same in all respects. Some four or five years ago, when I put into the Comptograph the same mechanism and function represented in Exhibit Defendant's machine, in respect to the depression of one key releasing any previously depressed key in the same column or order of numbers, I did not find it necessary to make any material change in the hand lever E.

X. Q. 31. Isn't it true that in the operation of the Exhibit Defendant's machine, the repeat key can be held depressed and the item enumerated changed as often as desired without touching the error key at all?

A. Yes, that is so.

X. Q. 32. Doesn't that show that changes may be made in the items enumerated without any manipulation of the long lever referred to by you in your preceding answer?

A. It does not. In the embodiment of the subject-matter to which all this pertains as exhibited in Exhibit Defendant's machine, there is also added to the hand lever E another key called the repeat key, which extends out of the case to enable the operator to manipulate the hand operated lever without having the hand operated lever itself extend out of the machine, and this other added mechanism, consisting of the repeat key and the parts which enable the operator by it to manipulate the hand operated lever from the outside of the machine, is, when depressed, and then the top end of it carried backward, held in this downward position by the repeat key so as to maintain the raised or elevated position of the front end of the hand operated lever, and thus locks the operation of the key releasing mechanism, of the claim 21 which I have heretofore described, against action. The reason why the depression of one key will release any other previously depressed key in the same column and which operates at all times whether the machine be set for

Deposition of Plaintiff's Witness, Dorr E. Felt, stipulated in from Massachusetts Case.

the normal adding of varied numbers or for repeating, is that whenever any key is depressed the mere depression of that key, wholly independent of any key releasing mechanism, first causes the key latch pertaining to that particular column to swing away from the notches which they engage to hold the keys down, and thus releases any key previously depressed in that column, but the latch again swinging back in time to engage and hold down the last depressed key in that column. This operation takes place wholly without reference to or without moving any part or member of the key releasing mechanism to which the claim refers, whether or not the repeat key be in either its raised or depressed position.

X. Q. 33. Please look at claim 47 of patent No. 568,021, and enumerate the elements of the claim, referring to each element by the reference character designated in the drawings of the patent.

A. One embodiment of the subject-matter of claim 47 is disclosed in the patent 568,021 by the carrying levers B^5 and their latches O^1, and devices for moving the levers into position for carrying, which are represented in the patent by the swinging frame, consisting of the cross-bar N and its pins O. These latter devices serving first to move the carrying levers into their extreme position away from the numeral wheels and then immediately moving a little ways from the carrying levers in a direction towards the numeral wheels, in which position they remain until the numeral wheels have received their prime movements under the influence of the column actuators, so that should any of the carrying levers be released from engagement with their latches they may drop forward far enough to prevent re-engagement of the latches and yet not far enough to cause the carrying levers through their pawls to disturb the corresponding numeral wheels until after the completion of the prime

Deposition of Plaintiff's Witness, Dorr E. Felt, stipulated in from Massachusetts Case.

movement of the numeral wheel. After the completion of the prime movement of the numeral wheels, these last mentioned devices move still farther towards the numeral wheels so as to permit the carrying levers to actuate the numeral wheels in their secondary or carrying of the tens operation.

X. Q. 34. Will you please similarly enumerate the elements of claim 48 of the patent?

A. This claim is the same as 47 except that it has the added element of a "cam device for controlling the movement of said devices for moving the levers." One embodiment of this cam device is represented in the patent by the cam piece N^6 and its coacting mechanism, which cam-piece is provided with a profile suitable for giving the devices for moving the levers for carrying the movements and functions just described in reference to claim 47.

The signature of the witness is waived by consent of counsel.

DEFENDANT'S TESTIMONY.

CIRCUIT COURT OF THE UNITED STATES FOR THE DISTRICT OF MASSACHUSETTS.

Comptograph Company,
Complainant,
vs.
The Adder Machine Company,
Defendant.
} In Equity No. 325.

Testimony taken on behalf of the defendant under the 67th Rule in Equity, as amended, before Herman Meyer a Notary Public, duly commissioned and acting at the Borough of Manhattan, in the City, County and State of New York, commencing December 30th, 1907, the said place being more than one hundred miles from the place of trial of said suit.

Met pursuant to consent.

Appearances: For the complainant, Henry Love Clarke, Esq.; for the defendant, William Raimond Baird, Esq.

Deposition of Defendant's Witness, Charles N. McFarland, stipulated in from Massachusetts case.

CHARLES N. MCFARLAND, a witness called on behalf of the defendant, having been first duly cautioned and sworn, testifies as follows in answer to interrogatories propounded by counsel for the defendant:

Direct Examination.

Q. 1. What is your name, age, residence and occupation?

A. Charles N. McFarland, age 38; residence, Dorranceton, Luzern County, Pennsylvania; my present oc-

Deposition of Defendant's Witness, Charles N. McFarland, stipulated in from Massachusetts case.

cupation is Superintendent for The Adder Machine Company of Kingston, Pa., the defendant herein.

Q. 2. How long have you been engaged in such occupation?

A. Since February, 1904.

Q. 3. In what occupation were you engaged prior to that time?

A. For about five years prior to that time I was in the employ of The American Arithmometer Company, the name of which has since been changed to the Burroughs Adding Machine Company, having charge of the experimental work of that corporation and of its drafting. Prior to my last named employment I was an instructor in the machine shop department of Washington University, St. Louis, Mo., which position I held for about six years and prior to that time I was, for three years, a student of that institution; prior to that time, I have worked for a number of years as a machinist and draftsman, having been employed by several different firms in those capacities.

Q. 4. Have you had any experience in examining letters patent for inventions, in comparing the claims of such documents with the descriptions of the devices purported to be covered thereby, in examining the descriptions of devices in the specifications of letters patent and their claims for the purpose of comparing other devices with such claims in order to ascertain whether or not the subject-matter of such claims was embodied in such other devices, and if so, state in what such experience consisted?

A. When I went into the employ of the American Arithmometer Company I was almost immediately brought into contact with patents and compelled to study them and compare their written claims with the written descriptions of the devices in their specifications and with the devices themselves in order to determine wheth-

Deposition of Defendant's Witness, Charles N. McFarland, stipulated in from Massachusetts case

er or not the claims properly covered such devices and the devices fell within the scope of the claims. In doing this work I examined a great many patents in the art to which adding machines relate, that is, the art of enumerating items on a calculating machine and registering or recording the result of such enumeration. I had charge of making experimental machines and devices in order to determine the feasibility and practicability of accomplishing their certain desired results relating to the art. I made a great many sketches and drawings relating thereto and compared them with patent claims and descriptions. These patents related to fare registers, cash registers, calculators, and similar devices, and I studied the structures described and claimed in the patents, and in many cases compared the structures with the claims and descriptions. I have also made a great many inventions in this art, some of which have been patented, and many more of which are now in process of being patented, both by the attorneys for my present employers, and the attorneys for the Burroughs Adding Machine Company, my past employers. I made myself familiar with the patents under which the machines made by our competitors are purported to be made, viz., the patents under which the Comptograph Company, the Felt & Tarrant Manufacturing Company, the Universal Adding Machine Company, the Burroughs Adding Machine Company, and other adding machine companies, are manufacturing their products, and I have examined the adding machines of their manufacture, and in most instances, compared them with the claims of the patents under which they are supposed to be made, and the claims of other patents to determine whether or not their structures came under the claims of the patent.

Q. 5. From the experience which you have detailed, do you believe yourself competent to understand the description and drawings of patents relating to the calcu-

Deposition of Defendant's Witness, Charles N. McFarland, stipulated in from Massachusetts case.

lating machine art and to understand the language of the claims employed therein and to be able to tell whether or not any particular structure brought under your observation corresponds to the language of such claims?

A. I do believe myself to be so competent.

Q. 6. Have you ever testified heretofore in any patent litigation?

A. I have never testified in any litigation involving patents, except in an interference proceeding in which the mechanical questions were not in issue. I do not claim in any sense to be a patent expert but only to be familiar with the patents of this art. Of course, I have a general knowledge of mechanics and the terms used in the mechanic art, but I have not become a specialist in any art except the one relating to calculating machines.

Q. 7. Have you any interest in the subject-matter of the present litigation?

A. No.

Q. 8. Have you any interest in the defendant corporation, financial or otherwise?

A. I am not a stockholder in the defendant company. I was formerly a stockholder, but I sold my stock over a year ago, and I have not acquired any since. Of course, I am the factory superintendent, and as such have an interest in seeing that the machines of the company are properly constructed so as to perform the functions which they were designed for, but I am not financially interested in the company.

Q. 9. Were you present during the taking of the testimony of Mr. Felt in Chicago?

A. I was, and I heard the greater part of that testimony.

Q. 10. While his testimony was being taken, did you examine Complainant's Exhibit, Defendant's Machine?

A. I did.

Deposition of Defendant's Witness, Charles N. McFarland, stipulated in from Massachusetts case.

Q. 11. Can you say that you understand its construction and mode of operation?

A. I believe that I can. The machine was built since I became the superintendent of the defendant's factory. I do not know that my attention was called to this particular machine, as they are turned out in quantities, but I was the superintendent when this machine was built, and supervised its construction in a general way.

Q. 12. Are you the inventor of any part of the Exhibit, Defendant's Machine, which was the subject of Mr. Felt's deposition?

A. Yes, I contributed something to the carrying mechanism of the machine in question. In fact I am a joint inventor with Mr. Charles Wales of the particular mechanism of that machine designed to prevent over rotation in carrying, with that exception I am not the inventor of the portions of the mechanism referred to by Mr. Felt, but they are the inventions, as far as they constitute invention at all, of Mr. Charles Wales, who formerly had charge of the manufacturing department of The Adder Machine Company, and who is now in the employ of the Burroughs Adding Machine Company.

Q. 13. Have you any knowledge of the state of the art relating to calculating or computing machines prior to November 11, 1890, the date of the application for letters patent No. 465255, involved in this litigation?

A. I have no such personal knowledge. I was engaged in the art only after that time, but I have read and studied the patents issued prior to that time, and have examined and studied machines said to have been made prior to that time, and I think I know generally what the state of the art was.

Q. 14. Will you state, generally, how far the art had advanced in producing calculating machines prior to 1890?

Deposition of Defendant's Witness, Charles N. McFarland, stipulated in from Massachusetts case.

A. It has produced adding machines, fare registers, cash registers and multiplying machines. These machines embody keys, by means of which items to be added could be enumerated, carrying mechanisms, by which, when numbers were set up greater than "9", in any denominational series the tens could be automatically carried, or transferred to the next higher series. They also had means for registering the result of adding calculations, means for correcting an error in enumerating an item, if one occurred, means for recording the items enumerated or the totals thereof, on paper or other suitable recording material, and means for clearing the machine or returning the adding wheels to zero after totalizing or other operations had been completed.

Q. 15. Claim 1 of patent 465255 reads as follows:

> "1. The combination, with a series of numeral wheels and actuating mechanism therefor, of a series of separate carrying devices, each provided with an actuating spring 31, detaining mechanism for said carrying devices, a device for releasing said carrying device, and mechanism for retracting said carrying devices against their actuating springs, whereby the carrying is effected by power not derived from the actuating mechanism, substantially as and for the purpose specified."

Do you agree with Mr. Felt in his opinion that the elements of this claim 1 are found in Complainant's Exhibit "Defendant's Machine" and please give the reasons for your answer?

A. I do not for the following reasons: The claim calls for a combination of mechanical elements arranged in a certain relation to perform a certain definite function set out in the following words,

> "Whereby the carrying is effected by power not derived from the actuating mechanism."

In order to understand what this statement of function means, and why it was inserted in the claim, it is

Deposition of Defendant's Witness, Charles N. McFarland, stipulated in from Massachusetts case.

necessary to understand something of the state of the art and Mr. Felt's relation thereto. Adding machines comprising numeral wheels and actuating mechanism therefor, and carrying mechanism by which the tens were transferred from a wheel of lower order to one of higher order were not original with Mr. Felt. I find this kind of device was common in cash registers and counting machines of different kinds and even the so-called comptometer, or calculating machine, at the time of the application which resulted in this patent No. 465255 had reached a fairly advanced state of development. Mr. Felt himself has contributed to the art by at least two inventions, patents upon which are represented by the numbers 371496 and 441232. In both of these patents we find a series of numeral wheels and actuating mechanism therefor, a series of separate carrying devices, each provided with an actuating spring, and in fact all of the mechanical elements included in this claim 1, but with the important difference that in those patents the power for carrying was derived from the actuating mechanism of the numeral wheels. As the numeral wheels were actuated by the depression of the keys, as in an ordinary typewriter, the power to do the carrying was obtained through the force exerted on the keys by the operator. So far, then, as there is any novelty in this claim it resides in this fact that the power used to effect the carrying is derived from some other source than the mechanism which rotates the numeral wheels.

In order to understand in what this novelty consisted it is necessary to state in general terms how the carrying is affected in these prior machines. Briefly, this is as follows: In these prior machines there were numeral wheels each provided with a pinion, or a small gear, by which they could be rotated. The actuating mechanism of the numeral wheels consisted of a toothed lever pivoted at some convenient point in the machine, the

Deposition of Defendant's Witness, Charles N. McFarland, stipulated in from Massachusetts case.

teeth on the lever forming a rack at one end which engaged with the pinion of the numeral wheel, serving, when the lever was moved, to rotate the numeral wheel. The power for moving these levers downward to thus rotate the wheel was derived from the depression of the keys which impinged upon the upper edge of these levers. The carrying mechanism of these prior machines was of a type well known to the art and of frequent use in cash registers, and the like. It was what is known to the art as the "cam and lever mechanism."

The operation of these machines to add and carry the tens was as follows: If the operator depressed a key bearing the number "7" for instance, in any given series, he caused the toothed lever to be pressed downward, rotating the numeral wheel to such a distance that the figure "7" appeared at the sight opening, and through suitable mechanism it remained in this positon when the key was released. Now, if the operator depressed, say a figure "5" in the same series, the numeral wheel was caused to rotate past the "9" position at the sight opening (this being the highest number on the periphery of the wheel) to a point beyond namely, the point where the figure "2" appears on the periphery at the sight opening, causing the ten to be carried to the next column to the left. This is done by the cam and lever mentioned.

In the machine which Mr. Felt described in patent 465255, Mr. Felt had a lever which he used to advance the paper upon which the record of the items and totals were placed in the line spacing operation. He probably found by his experience with the prior machine that, in the operation of enumerating the items upon the keys, that the additional work of carrying which his original mechanism put upon the operator had a tendency to cause the operator to grow tired, especially if a young girl was doing the work, which was often the case.

Deposition of Defendant's Witness, Charles N. McFarland, stipulated in from Massachusetts case.

When he found that he was going to use a hand lever for advancing the paper he naturally conceived the idea of taking this extra work off the actuating mechanism of the numeral wheels, that is, the keys, and having it done through the agency of this hand lever. On page 1 of the patent, line 86, we find his purpose clearly set forth as follows:

> "Another object of my invention is to derive the power to effect the carrying of the tens from the movement of the lever which advances the paper and thus cause the keys to be depressed with less expenditure of force."

Therefore, when he says in claim 1,

> "Whereby the carrying is effected by power not derived from the actuating mechanism"

he meant that in this machine he was going to do the carrying from mechanism not coupled to or connected with, or simultaneously actuated by the mechanism which moved the numeral wheel, that is, the keys.

The defendant's machine is not a key actuated machine, as Mr. Felt's machine is. It is a "key set" machine. That is, the keys are depressed merely to control the range of movement of the actuating mechanism of the numeral wheel. In the defendant's machine the power by which the numeral wheels are actuated is derived from the movement of the handle or lever, which is the same source of power as that used in effecting the carrying. It is easier to pull a handle than to push a key, because the leverage is longer and the arm is employed and not the finger. In the defendant's machine the carrying *is* effected by power derived from the actuating mechanism of the numeral wheels. The principal element in this actuating mechanism of the numeral wheels is the shaft which is oscillated by the main handle or lever of the machine. It is this oscillation which, through intermediate mechanism, stores the energy in or stretches

Deposition of Defendant's Witness, Charles N. McFarland, stipulated in from Massachusetts case.

the springs which do the carrying by moving the carrying levers. There is no other source of this energy.

I have made two illustrations showing whence the power in the defendant's machine is derived for actuating the numeral wheels, and whence the power is derived for effecting the carrying.

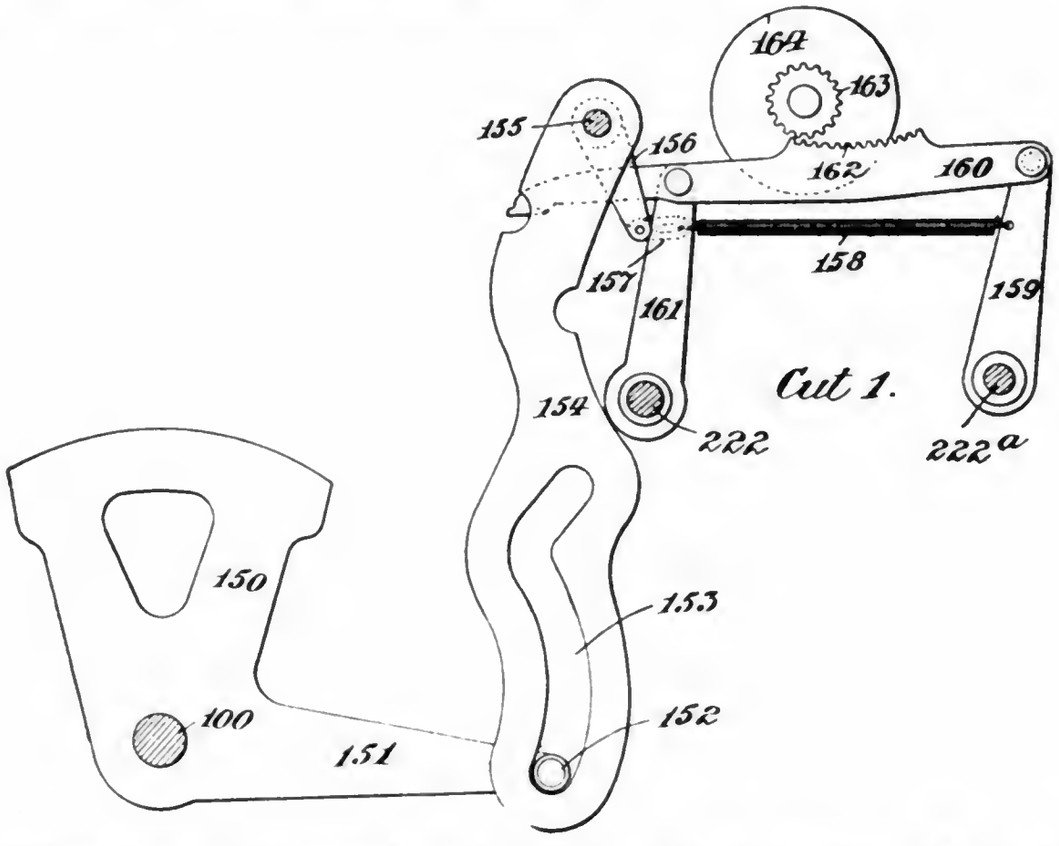

Cut 1.

The first of these I call cut 1. In this cut, 100 is the main shaft of the machine, 150 is a segment lever with a leg, 151 carrying a roller, 152 which runs in a slot, 153 of a cam link or lever 154 pivoted on a shaft, 155 to which is secured a series of crank arms, 156 which are connected by links, 157 to springs, 158 which are secured to oscillating arms, 159 to which are pivoted rack bars 160, the other ends of which are hinged to arms 161. Racks 162 on the rack bars 160 mesh with pinions 163 on the numeral wheels 164 and serve to rotate the latter. The numeral wheels are not rotated until the racks have moved toward the left and are returned in the opposite direction except when a total is to be recorded, when they are rotated at the beginning of the stroke of the handle.

Deposition of Defendant's Witness, Charles N. McFarland, stipulated in from Massachusetts case.

The second of these cuts I call cut 2, which shows how the carrying is effected by power derived from this same handle and main shaft.

Cut 2.

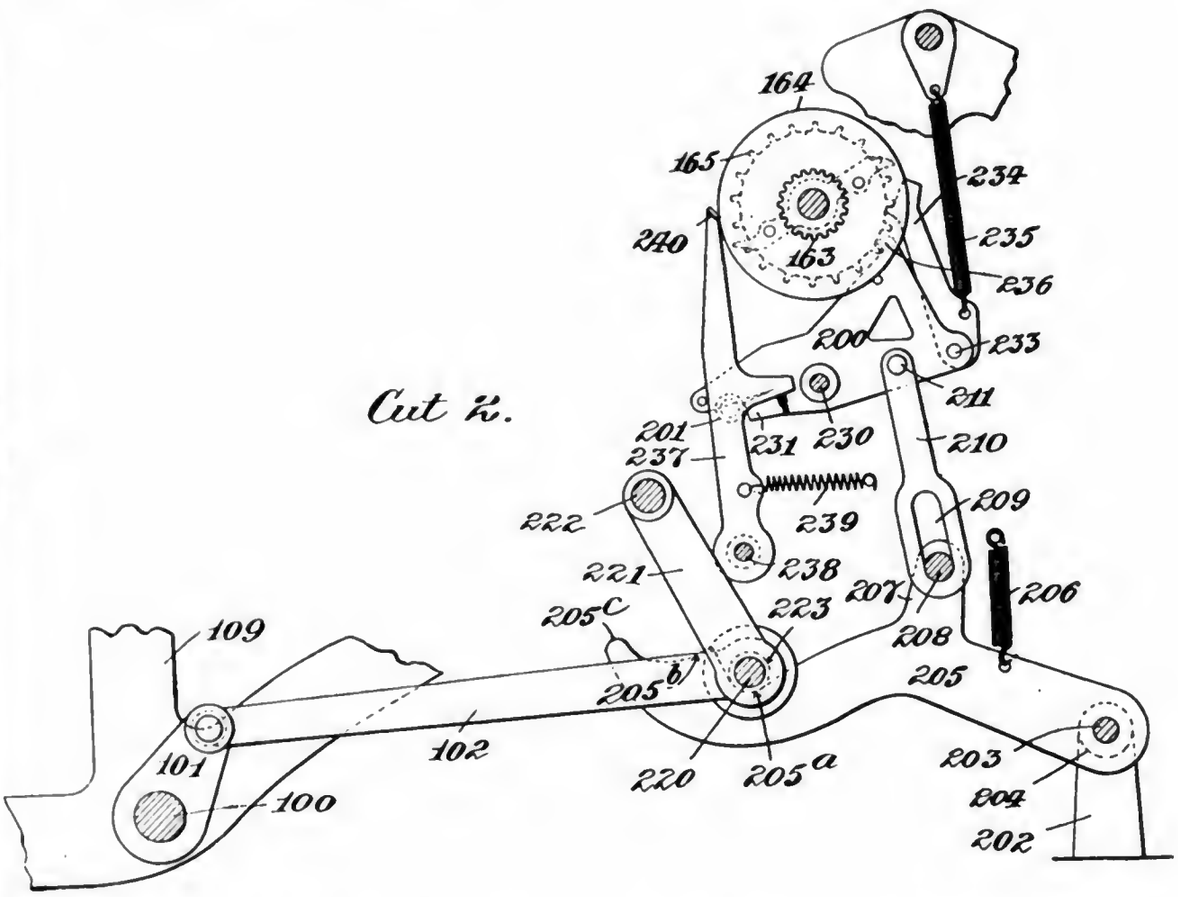

In this cut 2, 100 is the main shaft, as before, 101 is a crank secured thereto, 102 is a link hinged to a shaft 220 carrying a roller 223 adapted to operate against the upper surfaces 205a, 205b and 205c of a swinging arm 205 having a hub 204 oscillating on a shaft 203 mounted on a standard 202 on the base of the machine. Each swinging arm 205 has an ear 207 carrying a cross rod 208 engaging a slot 209 of a link 210 secured by a pivot 211 to the carrying plate or lever 200 which swings on the shaft 230. This carrying lever 200 is provided with a pivot 233 on which is mounted the carrying pawl 234 adapted to engage with the teeth 165 of the numeral wheel 164 to move the latter one space when the carrying operation is effected. When the main handle is pulled, it causes the link 102 to move the roller 223 against the arm 205 and bring the cross rod 208 to the

Deposition of Defendant's Witness, Charles N. McFarland stipulated in from Massachusetts case.

bottom of the link 209 so as to pull down the lever 200 with its pawl 234 and to stretch the spring 235 in so doing. When the handle is reversed and moved backward, as shown in the cut 2, the power which has been stored in the spring 235 during the first half of the stroke of the handle, pulls up on the pawl 234 and moves it against the teeth 165 of the wheel 164 to effect the carrying.

That is, in each case, the power to move the numeral wheels to accumulate or to carry is derived from the main handle of the machine acting on the main shaft 100.

If the main handle of the defendant's machine was moved by the finger of the operator, instead of the hand, the operation would be precisely similar in its disadvantages to that of Felt's prior machines. It is because arms are stronger than fingers that these advantages do not exist.

In order to substantiate his claim of similarity between the patent and the defendant's machine, Mr. Felt calls some of the parts of the defendant's machine by names which are not recognized as proper by a competent mechanic, which he undoubtedly is. For instance, in his machine the element which actuates the numeral wheels is a toothed lever. He says concerning the defendant's machine that the element which rotates each numeral wheel is

> "A lever * * * consisting of two parts, one of which lies horizontally just beneath each pinion, its end being pivoted to the other part of the lever which extends up from the shaft on which the lever is mounted."

Now, as a matter of fact, this element is not a lever at all and it is not made in two parts. It is a rack bar supported on two oscillating arms and not one lever, as Mr. Felt states. It is in effect a segment of an internal gear having a radius much greater than the pinion with

Deposition of Defendant's Witness, Charles N. McFarland, stipulated in from Massachusetts case.

which it meshes. Mr. Felt knows that this is not a lever as well as I do.

Comparing the elements of the claim with the mechanism of Felt's prior patents there exists first, numeral wheels; second, actuating mechanism therefor; third, a series of separate carrying devices; fourth, each provided with an actuating spring which is precisely like the spring 31 of this patent. In both of these patents, there is a cam which is a fifth element and which constitutes a device for releasing the carrying devices. and this cam also answers to the description "Mechanism for retracting said carrying devices against their actuating springs."

Q. 16. Do you find, then, in the claim 1, under consideration, any novel element, and if so, what is it?

A. No, I do not find any novel element, the novelty in the claim resides in the "whereby clause" which is

> "Whereby the carrying is effected by power not derived from the actuating mechanism."

Q. 17. Please compare the separate elements of this claim 1 with the defendant's machine and state whether you find them existing therein.

A. The actuating spring 31 of the claim is not found in defendant's machine. The actuating spring 31 of the patent and of Felt's machine, and his prior patents, is a so-called "grasshopper spring" made of a bent piece of wire which is constantly pushing on the carrying lever, whereas in the defendant's machine the carrying spring is a spring made of closely coiled wire, which is constantly pulling upon the carrying lever.

The element in the claim "A device for releasing said carrying devices" does not exist in the defendant's machine unless it means "a separate device for releasing each carrying device." Mr. Felt's own machine does not contain the elements set out in the claim; that is, a

Deposition of Defendant's Witness, Charles N. McFarland, stipulated in from Massachusetts case.

device for releasing more than one carrying device, but each carrying device has its own releaser.

As in defendant's machine each carrying device has its own releasing device, defendant's machine does not contain this element of the claim.

Q. 18. Do you find any patent or patents in the prior art which contains the elements of this claim 1 of patent 465,255?

A. No, I do not. If the last or "whereby" clause is to be considered an essential part of the claim, or if the claim is to be construed as having a single releasing device for all the carrying devices, but if the claim is to be construed as Mr. Felt interpreted it in his testimony; that is, assuming that each carrying device had its own releasing device and disregarding the fact that the carrying is effected by power derived from the actuating mechanism of the numeral wheel, as in the defendant's machine, then I do find substantially the elements of the claim in several prior patents.

Bergmann, 171,714.
Schweitzer, 202,057
Smith, 414,335
Patterson, 423,948
Lusuarde, 426,029
Rector, 434,201
Davis, 228,448
Wythe, 445,582

In each of these patents I find numeral wheels, one of a lower order, and one of a higher, and actuating mechanism therefor, carrying devices for transferring the tens from the wheel of lower order to the wheel of higher order. Not all of these devices have a series of numeral wheels nor a series of carrying devices, but as the Felt machine simply employs numeral wheels and carrying devices in series, one alongside the other, it is the merest duplication to use more than one of the same kind. In

Deposition of Defendant's Witness, Charles N. McFarland, stipulated in from Massachusetts case.

each of these machines there is a carrying device consisting of a lever which has an actuating spring.

In the Bergmann patent the lever is designated by w; the spring is not designated by any letter, but it is clearly shown in the clearer view, Fig. 5 of the patent.

In the Schweitzer patent, the lever is designated as N, the spring t.

In the Smith patent, the lever is indicated by the letters j and t, this lever being divided into two parts. The spring is designated by the letter n.

In the Patterson patent, the lever is indicated by the letter j and the spring k.

In the Lusuarde patent, the lever is indicated by the letter M and the spring by the same letters because the lever is a combination of lever and spring.

In the Rector patent, the lever is indicated by G′ and the spring by I′.

In the Davis patent the lever is indicated by N and the spring by the letter o.

Another construction of this mechanism is shown in Figure 14, in which the lever is indicated by R, and the spring by S.

In the Wythe patent, the carrying lever is designated by p^2 and the spring by p^4.

In all of these patents, except the last, the functions of detaining, releasing and retracting the carrying levers are performed by the cam which forms a part of the cam and lever device before mentioned.

In Figure 8 of the Rector patent the way such a cam operates is clearly shown. The cam F′ rotates upon its axis Q in the direction of movement of the hand of a watch, and impinges against a roller of pin F″ so as to retract the lever G′ away from the numeral wheels against the pull of the spring I′ constituting, it will be seen, a retracting mechanism against the spring I′ and a detaining mechanism to prevent the pawl H′ from oper-

Deposition of Defendant's Witness, Charles N. McFarland, stipulated in from Massachusetts case.

ating to turn the wheel H″ of higher order by engagement with the teeth of this wheel until such time as the radial part of the cam F′ comes adjacent to the pin, or roller F″ when further motion of the cam F′ in the same direction causes the lever G′ to be released, thereby allowing it, under the tension of the spring I′, to be actuated toward the numeral wheel. It should be said that in its motion away from the numeral wheel at the time when the pin F″ about reaches the point of release the pawl H′ has dropped behind a tooth on the wheel of higher order so that when the lever is released and drawn towards the numeral wheels by the pin I′ and the wheel of higher order is moved one tooth around on its axis Q′.

As all the cams in the different patents except the last one mentioned operate in precisely the same manner or practically in the same manner, as that in the Rector patent, I will simply identify this cam by its reference letter in those different patents.

In the Bergmann patent this cam is designated in Figure 5 by the character m. In the Schweitzer patent it is designated as s. In the Smith patent its is designated as i. In the Patterson patent it is designated as i. in the Lusuarde patent it is designated as L. In the Davis patent, this cam is shown in two form in Figure 5 as P and by the same character in Figure 14.

In his patent 465255, Mr. Felt split up the functions of this cam in order to relieve the force exerted by depressing the keys, but the language of this claim is broad enough to cover the devices in all of these prior patents because of the use of the terms "mechanism" and "devices".

In the Wythe patent No. 445582, the functions of the cams were split up exactly as in the machine of this patent No. 465255, but this is a "key set" machine, as is the defendant's machine, and interpreting the claim as

Deposition of Defendant's Witness, Charles N. McFarland, stipulated in from Massachusetts case.

Mr. Felt does in his testimony, when applying the elements of the claim to the defendant's machine, I find that the mechanism of this Wythe patent contains all the elements of the claim.

Q. 19. Do you agree with Mr. Felt in his opinion that the elements of claim 6 of patent 465255 are found in the defendant's machine?

A. I do.

Q. 20. Do you find the elements of this claim in substantially the same relation in any of the patents in the prior art, and if your answer is yes, please point them out?

A. I do. This claim reads as follows:

> "6. The combination, with numeral wheels and actuating mechanism therefor, of spring-actuated carrying levers, devices for detaining said carrying levers, and devices for releasing said carrying levers to carry the tens, substantially as and for the purpose specified."

I already explained how these elements exist in the prior patents of Mr. Felt himself, and in the patents of Rector, Davis, Bergmann and others referred to in my remarks in reference to claim 1. The cams of these patents perform the three-fold function of retracting, detaining and releasing the carrying lever. The mechanism of patent 465255 is entirely different from that of Mr. Felt's prior patents, but the language of the claim is broad enough to cover not only the mechanism of this patent, but also the mechanism of the prior patent.

In the Wythe patent No. 445582, I find the mechanical elements of this claim in precisely the same relation as in the mechanism of this Felt patent 465255. In the Wythe patent there are "numeral wheels" (a series of them) as in the Felt patent, and "actuating mechanism therefor." There are "spring actuated carrying levers" closely resembling the carrying levers of the Felt

Deposition of Defendant's Witness, Charles N. McFarland, stipulated in from Massachusetts case.

machine; there are "devices for detaining said carrying levers", whose functions are precisely those of the devices in the Felt patent; there are also "devices for releasing the carrying levers to carry the tens" and they perform their functions "substantially as and for the purpose specified" in the Felt patent.

Q. 21. Do you agree with Mr. Felt in his opinion that the elements of claim 11 of patent 465255 are found in the defendant's machine?

A. I do not, because the element of the claim

> "Mechanism which automatically moves the stops from engagement with all the numeral wheels and resets the latter"

is not to be found in the defendant's machine. This claim 11 reads as follows:

> "11. The combination, with numeral-wheels 4, carrying pawls, and actuating mechanism, of movable stops which prevent overrotation of all the numeral wheels and mechanism which automatically moves the stops from engagement with all the numeral wheels and resets the latter, substantially as described."

In order to understand what is meant by the terms of this claim reference must be made to the specification in the patent which describes the combination of the device as follows:

> "22 indicates a series of stops, one for each numeral wheel 4. Each stop 22 is provided with a spring 24, adapted and arranged to cause such stop to enter between the pins 6 of its corresponding numeral wheel 4, to prevent over rotation of said numeral wheel under the impulse of the carrying pawls. Each stop 22 is mounted upon the shaft 23, as best shown in Figure 12, and is provided with a pin 25, adapted to engage with the periphery of its corresponding actuating disk 7, as shown in Figures 10 and 12. The periphery of each disk 7 is provided with a notch 26, adapted to receive the pin 25 when the actuating disk is in its normal position. The periphery of each disk 7 by its engagement with its

Deposition of Defendant's Witness, Charles N. McFarland, stipulated in from Massachusetts case.

> corresponding pin 25 keeps its stop 22 from locking engagement with its numeral wheel, except when the pin is in the notch 26, at which time the pawl is permitted to engage with the numeral wheel, as heretofore set forth.
>
> The operation of the stop 22 is fully shown in patent No. 371496, issued to me Oct. 11, 1887."

By referring to the prior patents mentioned by Mr. Felt it is seen that the elements of this claim are all contained in that prior patent with the exception that in place of the lever, which he used to rock the shaft 72, he is employing a connection inside the machine from the rock shaft to the mechanism which resets the numeral wheels.

I cannot find in Mr. Felt's patent the elements which he describes as "mechanism which automatically moves the stop from engagement with the numeral wheels and resets the latter".

The element he says in his testimony is the rock bar 72 and it is the same rock bar found in his prior machine above referred to, but this rock bar is not automatically operated in his prior machine, nor in the machine described in patent 465255. In the machine described in this latter patent the bar is manually operated by pushing down on the bar numbered 64 on the drawings. This movement is directly communicated to the rock bar 72 just as the movement of the lever outside of the casing was directly communicated to the same rock bar in the prior patent. Probably what Mr. Felt meant to say was that the resetting mechanism of the numeral wheels was manually operated and that the mechanism for moving the stop 22 moved with the resetting mechanism because it is connected with it. This is a fact as the drawings of the patent show, but the claim does not say this, he claims automatic mechanism which moves the stops and resets the numeral wheel and such mechanism is not found in either his machine or in the defend-

Deposition of Defendant's Witness, Charles N. McFarland, stipulated in from Massachusetts case.

ant's machine, because in his machine both of these functions are performed manually and in the defendant's machine the resetting mechanism has nothing to do with the so-called "stops", and the latter do not perform the functions attributed to them by Mr. Felt.

In the defendant's machine the things which are described as stops, which prevent the overrotation of the numeral wheels by Mr. Felt are each under tension of springs tending to move them constantly away from the numeral wheels, and it is these springs which answer the term of the claim "mechanism which automatically moves the stops from engagement with the numeral wheel", (if these are the stops). Now these springs have nothing whatever to do with the resetting of the numeral wheels to zero. Their sole and only function is to put a tension on the so-called stops. Consequently these springs do not answer to the qualifying phrase of the claim which required that the mechanism which automatically moves the stop from engagement with the numeral wheels shall also reset the latter.

Mr. Felt says that whenever the numeral wheels are returned to zero in the defendant's machine the racks are moved and allow the springs on the stops to pull the latter away from the numeral wheels and that this is the same in effect as the operation of his machine.

He is mistaken about this, because the operation is not the same. In the explanation which he makes of the terms of the claim he says that the "carrying pawls and actuating mechanism" of the claim are the same as the "carrying devices" of claim 1 of this patent, and he has already explained that by "carrying devices" he means the "carrying levers and their actuating springs". He further says that the movable stops are the stops 22 of

Deposition of Defendant's Witness, Charles N. McFarland, stipulated in from Massachusetts case.

his patent and that the "mechanism which automatically moved the stop from engagement with the numeral wheels and reset the latter" are the stops 22 in combination with the rock shaft 72 and that as in the operation of resetting the numeral wheels the rock shaft 72 is automatically caused to rotate, it simultaneously moves the stops 22 and answers the terms of this claim 11.

I have already pointed out that the operation of the rock shaft 72 is not automatic in the Felt machine. I now wish to call attention to the fact that the only function of the stops 22 as they are described in Mr. Felt's patent 465255 and also in his prior patent are stops which are adapted solely to prevent overrotation in carrying. This was not explained by Mr. Felt in his testimony, and, therefore, his answer to the question was incomplete.

In the defendant's machine the parts which Mr. Felt called stops are not intended to prevent overrotation in carrying and do not prevent such overrotation. This is the first mistake he made in respect to these so-called stops. While the carrying operation in defendant's machine is being performed these parts, or members, which he calls "stops to prevent overrotation in carrying" are in fact either as far away from the numeral wheels as they can be, or they are in the act of moving away from such numeral wheel. It is difficult to see how he could arrive at the conclusion that these stops were designed to prevent overrotation in carrying when, if he had noticed the action of these parts during an operation of carrying, he could have seen that the parts were not in contact with the numeral wheel or connected with it, but were either as far away as they could be, or were moving away at the time of carrying and, therefore,

Deposition of Defendant's Witness, Charles N. McFarland, stipulated in from Massachusetts case.

could in no sense be a stop for the numeral wheel at such time.

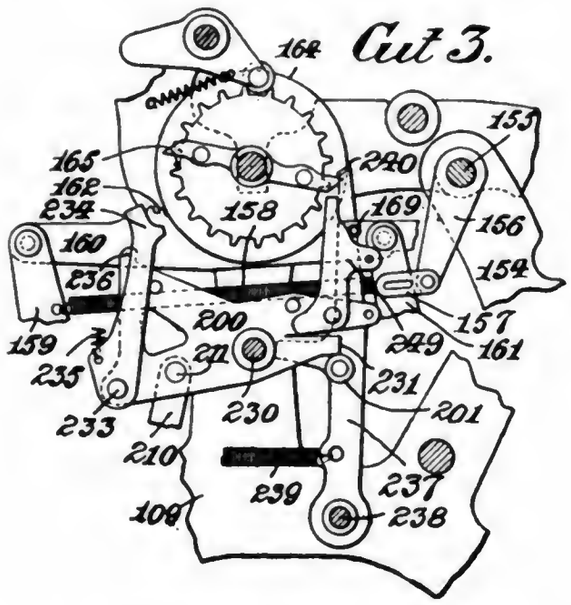

I have made a drawing which I call cut 3, showing parts of defendant's machine. In this cut 3, 200 is the carrying lever and 234 is the carrying pawl as before; 164 is the numeral wheel, as before; and 240 is the stop for preventing overrotation after the accumulation of an item. It is the stop which Mr. Felt supposed was to prevent overrotation in carrying. In the defendant's machine the stop which does prevent overrotation in carrying I have designated 236 which is a projection on the end of the carrying lever 200.

Now, supposing the rack bar 160 to have been actuated in a direction toward the front of the machine which movement has taken place during the forward movement of the handle of the machine, and the numeral wheels to have dropped into mesh with the racks, and the racks to have been returned, thus rotating the numeral wheels. Just at the time when the rack moves the numeral wheel the last tooth in its rotation, the pin 169 on the rack 160 comes into contact with the front side of the pawl 240, thus bringing it into the pathway of the teeth 165 on the numeral wheel 164. An operation of the machine will demonstrate, however, that the rack bars 160 actually come to a full stop before the teeth of the numeral

Deposition of Defendant's Witness, Charles N. McFarland, stipulated in from Massachusetts case.

wheels, engaging the teeth of the rack, start to move out of mesh therewith and it would seem to furnish an effective stop for overrotation of the numeral wheels. For a time the defendant's machine was built and sold without the stops 240 depending entirely upon the before mentioned means for preventing overrotation. The stops 240 were, however, subsequently put into the machine as an extra precaution, as, after continued use of the machine there might be some lost motion or slack in the mesh of the racks and pinions and this extra precaution would effectually prevent overrotation in such case.

Q. 22. Are there in defendant's machine any movable stops which prevent overrotation of the numeral wheels in carrying similar to the stops 22 of the patent 465255?

A. No, one end of the carrying lever is so formed as to serve this function. Such end is not movable with reference to the lever, and it has no connection with the mechanism for resetting the numeral wheels.

Mr. Felt completey mistook the function of the piece in the defendant's machine which he called a stop. Its only function is to prevent possible overrotation of the numeral wheels at unusual speeds during the accumulation of an item and not in carrying. The machine was constructed for a considerable time at first without these pieces and they were put in merely as a precaution against possible overrotation under the before named condition. In so far, then, as this part has a function in the operation of the machine, its function corresponds to that part in the Felt machine of the patent designated by the number 19 and this part and its function is fully described in his prior patent.

Resumed Tuesday, Dec. 31st, 1907, at 10 A. M.

Q. 23. Referring to the printing mechanism of the Felt patent 465255, and the printing mechanism of the

Deposition of Defendant's Witness, Charles N. McFarland, stipulated in from Massachusetts case.

defendant's machine, and having specially in mind the hammers and their related parts, please describe these parts in the two machines?

A. In the first place the machines are radically different in construction and mode of operation. In the Felt machine the type are rigidly fastened to or made integral with sectors or flat plates which he calls "recording disks". These are arranged side by side, one for each series of keys and when a key is depressed its corresponding disk is oscillated so that a particular type is swung to the point of print opposite the strip of inking ribbon, a strip of paper being fed between the strip of ribbon and the movable platen. Back of these parts described are a series of hammers adapted to strike the platen. Each hammer has an actuated spring and a separate detaining and release pawl which is moved to allow the hammers to be actuated by their springs when the keys are depressed. The parts are so arranged that when a key is depressed the type disk is oscillated to position and then the corresponding hammer is actuated. There is no connection or contact between the hammers and the type, the hammers propelling the platen, paper and ribbon toward and against the type.

Each hammer detaining and release pawl has a flange and pin adapted to cause the release of each hammer to the right so as to propel the platen, paper and ribbon against the type disk which have not been moved and which stand at zero so that "0" is printed opposite each unmoved disk.

In this patent Mr. Felt showed an improvement on his prior attempts to design a satisfactory printing device. His first attempt is shown in his prior patent No. 405,024; his second attempt is described in his patent No. 441232, so that the device described in patent 465255 is his third attempt. The principal improvement in this

Deposition of Defendant's Witness, Charles N. McFarland, stipulated in from Massachusetts case.

last named mechanism is the individual hammer with its individual release as contrasted with a universal hammer and a common release, and the automatic zero printing mechanism.

In the defendant's machine the types are not rigidly fastened, but are loosely mounted in a series of carriers, each carrier containing its series of type and each type being automatically retracted to operative position after use. When a key is depressed, unlike the Felt machine, such depression has no effect on the type. Back of the type is a permanent platen. I say "permanent" in contradistinction to the *movable* platen of the Felt machine (although defendant's platen moves laterally) because it does not move with respect to the type during the printing operation. The types are actuated by hammers. In the Felt device it will be remembered that the hammers propel the platen, paper and inking ribbon against the fixed type. In the defendant's machine hammers are employed to cause the type to be propelled against the ink ribbon and thence against the paper as in an ordinary typewriter. The hammers do not strike the type, but strike plungers opposite the point of print, which plungers strike the type.

Each hammer has an actuating spring and there is a common or broad pawl which detained all of them against movement until it is oscillated by the movement of the main handle. This oscillation releases all the hammers to allow them to strike their plungers to propel the type. Unlike the Felt machine there is a direct connection between the hammers and the type.

Each hammer in defendant's machine has a hook adapted to intercept it and prevent it striking its type plungers after it has been released. This hook is only moved out of an intercepting position when its corresponding type carrier has been moved to some other

Deposition of Defendant's Witness, Charles N. McFarland, stipulated in from Massachusetts case.

position than "0," or some carrier to the left of it has been so moved. This hook has an ear bent to the left so that the hook to the right of the last type carrier moved from "0" will each be oscillated simultaneously to prevent the interception of their particular type hammers. Comparing the two machines this may be said generally that each one prints or records the enumerated items including the appropriate zeros, but that the construction and mode of operation of the parts differ in each.

Q. 24. Please compare the elements of claim 14 of patent 465255 with the mechanism of the Felt patent?

A. Claim 14 reads as follows:

> "14. The combination, with recording devices and actuating mechanism therefor, of hammers 87, springs 88 for said hammers, detaining devices for said hammers, separate devices for releasing each hammer from the actuating mechanism of its recording disk, and devices for releasing all hammers to the right of the one released, whereby the zeros are recorded automatically, substantially as and for the purpose specified."

In his testimony relating to this claim of the patent Mr. Felt states that his hammers 87 and springs 88 are the same as are found in his former patent 441232. The "recording devices and actuating mechanism therefor" of the claim, Mr. Felt says, are the recording disk 81 and levers 11 and 16. They are the same as the recording disks 27 and levers E and 22 of the prior patent 441232. "The detaining devices for said hammers" are, as Mr. Felt says, the separate pawls 89, one for each hammer. The next element of the claim is "separate devices for releasing each hammer from the actuating mechanism of its recording disk". I cannot find this last mentioned element in the patent. Mr. Felt says these devices are the levers 86 "one for each column extending upwardly from the lever 16". The levers 86 release the hammers

Deposition of Defendant's Witness, Charles N. McFarland, stipulated in from Massachusetts case.

87 because by their movement they disengage the separate detaining pawls 89 and permit the springs 88 to move the hammers, but these levers 86 are not "devices for releasing each hammer from the actuating mechanism of its recording disk", because the hammers are not connected to such actuating mechanism and a device cannot release a hammer from something with which it has no previous connection.

Mr. Felt says that this actuating mechanism of the recording disk are the levers 11 and 16, but hammers 87 are not connected to the levers 11 or 16 directly or indirectly and cannot be released therefrom.

"The devices for releasing all hammers to the right of the one released" are correctly identified in his machine by Mr. Felt and I agree with him.

Q. 25. Do you agree with Mr. Felt that the elements of claim 14 of patent 465255 are to be found in the defendant's machine?

A. I do not. Defendant's machine does not have the following elements:

1. Detaining devices for said hammers.
2. Separate devices for releasing each hammer from the actuating mechanism of its recording disk.
3. Recording disks.
4. Devices for releasing all hammers to the right of the one released whereby the zeros are recorded automatically.
5. Hammers 87.

If the designation "87" means a hammer adapted to propel the platen, paper and ribbon against the type as the specification says it does, and it does not have—

6. Springs 88 for said hammers.

To take up the claim in detail it contains the following elements:

Recording devices and actuating mechanism therefor.

Hammers 87

Deposition of Defendant's Witness, Charles N. McFarland, stipulated in from Massachusetts case.

Springs 88 for said hammers
Detaining devices for said hammers
Separate devices for releasing each hammer from the actuating mechanism of its recording disk
Devices for releasing all hammers to the right of the one released whereby the zeros are recorded automatically.

Mr. Felt says in his testimony that the recording devices and actuating mechanism therefor in the defendant's machine consists of certain type heads which he identifies, and the actuating mechanism consists of an arm of a column actuator, together with a series of horizontal levers positioned beneath the keys and serving to limit or determine the amount of movement which the column lever shall make.

In the defendant's machine there are "recording devices," but they comprise movable types having no resemblance to the recording disks of the Felt mechanism and Mr. Felt nowhere suggests in his patent any such efficient recording device as these movable types. The mechanism which Mr. Felt says constitutes the "actuating mechanism for the recording devices" in defendant's machine, really does not have the function which he ascribes to it. It is a series of levers beneath the keys which serve merely to limit or determine the position of the proper type at the point of print. The *actuating* mechanism for the type consists of a train of mechanism beyond the column actuators and in front of them; the so-called column actuators forming only one element in a long train between the main handle and the type.

Mr. Felt found the "hammers 87" of the claim in the type hammers of the defendant's machine. These hammers are properly designated "hammers," but they are not "hammers 87" of the Felt device, because they do not have the construction or function of those hammers. The hammers of the defendant's machine strike plungers which, in turn, propel the movable types against the rib-

Deposition of Defendant's Witness, Charles N. McFarland, stipulated in from Massachusetts case.

bon paper and platen. Mr. Felt's hammers 87 have a precisely opposite mode of operation and propel the paper and ink ribbon against the rigid type secured to his recording disk.

Mr. Felt finds the "springs 88" of the claim in the springs which co-operate with the hammers of the defendant's machine. Again the construction and mode of operation of these springs differ from the construction and mode of operation of the springs of the Felt patent. In the Felt patent the springs 88 are normally stretched and charged with energy to move the hammers, while in the defendant's machine the springs for the hammers are not normally stretched and charged with energy.

Mr. Felt finds "the detaining devices for said hammers" of the claim in what he calls a series of nine pawls which are pivoted on a short shaft near the hammers.

In calling these members "detaining devices," Mr. Felt shows that he does not understand their mode of operation in the defendant's machine. In the defendant's factory these members are called *hammer hooks.* They do not exercise the function of detaining the hammers. This can readily be seen by operating the machine. If a number is set up on the keys and the main handle is operated it will be seen that all of the corresponding hammer hooks have been rotated away from their hammers and such hammers have not moved, so that these hooks exercise no detaining function on the hammers at all.

There is in the defendant's machine mechanism for detaining its hammers, but it does not comprise separate detaining devices as called for by the claim, but is a single detaining device common to all hammers.

Mr. Felt finds the "separate devices for releasing each hammer from the actuating mechanism of its recording disk" in a series of vertical pieces of metal in the ma-

Deposition of Defendant's Witness, Charles N. McFarland, stipulated in from Massachusetts case.

chine which are the things called in the defendant's factory the "hammer hook lifters."

I have already explained that I cannot find this element in the Felt machine and it certainly does not exist in the defendant's machine.

In making this statement about the hammer hook lifters, Mr. Felt evidently does not understand the defendant's machine. He says that when one of these lifters travels upwards it impinges against the hammer hook which he called the hammer *pawl* and rotates it out of its engaging position and permits the hammers to strike against the type. As I have previously explained, the hook against which the lifters impinge are not *pawls,* and do not release the hammers. These hooks have no such function as releasing the hammers from the actuating mechanism of the recording disk as called for in the claim. They may be oscillated on their pivots without affecting the hammers which are detained by the other means I have referred to.

Moreover the releasing of the hammers to enable them to be actuated (whatever this release is from) is not accomplished in defendant's machine by "separate devices," but by the broad pawl above referred to. If the claim had read "a device for releasing the hammers" such element might have been found in the broad pawl in question, but in the Felt machine it is necessary to have separate devices and consequently the language of the claim could not be interpreted to mean a single device under any circumstances. This element of the claim is not found in defendant's machine.

It should also be noted that in the defendant's machine there is at no time any engagement between the hammers and the actuating mechanism (of the recording disks) or their equivalent, and consequently the hammers cannot be released from an engagement which does not exist.

Deposition of Defendant's Witness, Charles N. McFarland, stipulated in from Massachusetts case.

The hooks above referred to do serve the purpose after they have intercepted the hammers on the way to the type plungers of arresting the hammers against further movement, but in such case there is no mechanism whereby the hammers are released from such detention to permit them to complete their stroke as is the case in the Felt machine.

There are also no "devices for releasing all hammers to the right of the one released whereby the zeros are recorded automatically." Mr. Felt says that these devices in the defendant's machine consist of a pin on each one of the hammer hooks which come in contact with the pin on the next adjacent hammer hook to the right and carries it out of engaging position with the hammer.

As I have shown there is no such release of the hammers in the defendant's machine as in the Felt machine and consequently the stated function cannot be performed by the mechanism of the defendant's machine selected by him. In the defendant's machine all of the hammers are released at each stroke of the operating handle. In those columns where zero should be printed the type carriers have not been moved and as the "0" types are normally at the point of print the zeros are printed in their proper places.

The hammer hooks each have a projection extending toward the left under the next adjacent hook which causes all the hooks to the right of any particular hook to oscillate downward with it so that it is out of the path of the hammer and does not intercept it after it has been released from the detaining action of the single broad pawl referred to. That is, by means of this mechanism the "hammers to the right" are not released, but they are not intercepted when they are released, because the function of the intercepting mechanism has been suspended concerning these hammers which are to print the zeros. This is not a *releasing* operation, because the

Deposition of Defendant's Witness, Charles N. McFarland, stipulated in from Massachusetts case.

hammers are not released until after it has taken place, and their release is accomplished by a different element.

If all of the elements in the defendant's machine which Mr. Felts says correspond to the elements of this claim 14 are assembled and operated just as they ought to be yet they would not record anything or perform any useful function because the keys can be set and the types positioned and the hammers released and propelled without doing any recording whatever. A necessary element in the defendant's machine is a platen at the line of print to co-operate with the type. In the Felt machine this is not so, because in that machine the hammers can act directly against the paper and cause the paper and cause the record to be made on the paper without the intervention of any platen. He says in his patent that the hammers are intended to strike the paper directly and concludes his statement of the mode of operation of these devices with this remark: "If desired, a rubber platen 114 may be interposed between the paper 103 and the hammers 87." This is to be found at line 131, page 5, of the patent.

I have made two drawings showing the two positions of the hammers in the defendant's machine and have

Cut 4.

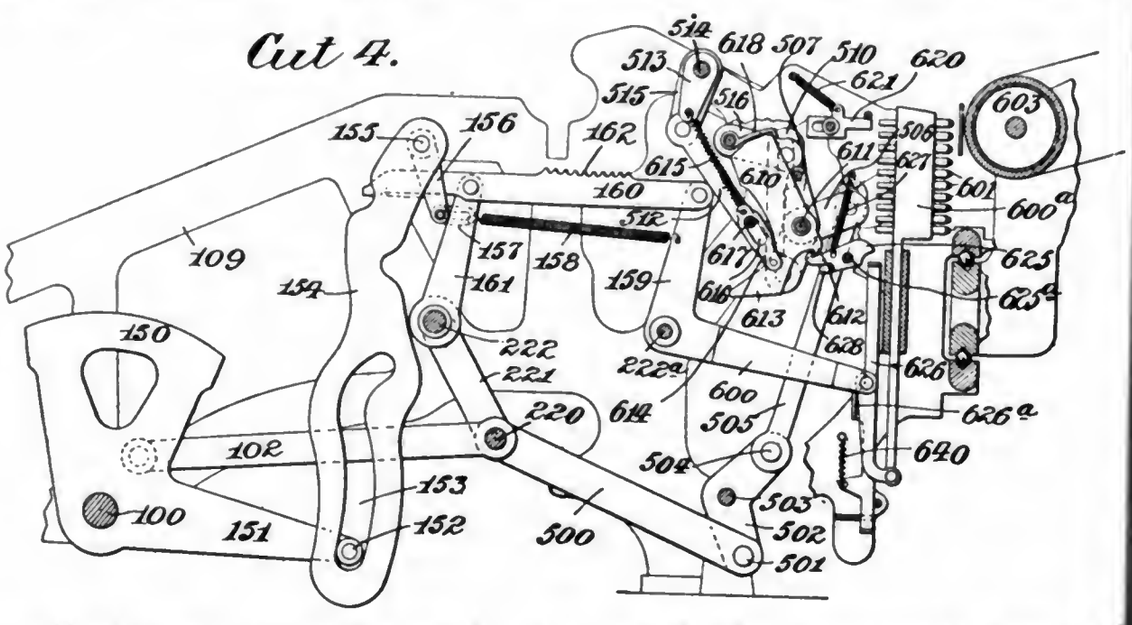

called them cuts 4 and 5. In cut 4, the hammers are not released, and in cut 5 they are released and are in con-

Deposition of Defendant's Witness, Charles N. McFarland, stipulated in from Massachusetts case.

tact with their plungers. In these cuts, 600 is in extension of the back arm 159 supporting the rack bar 160 and is pivoted to a type carrier 600[a], which carries the several type bars 601 which are to be propelled against the paper 602 and platen 603. The hammers 610 are pivoted to a common rod 611 and are provided with a hook 612 and a leg 613. To this leg 613 is pivoted a link 614 which has a slot 616 and to the other end of which is secured a spring 615, the other end of which spring is secured to a vibrating frame 513 in the machine. A stop rod 617 passes through the slot 616 of the series of links 614. A broad pawl 618 co-operates with the upper edges of all the hammers to detain them. 620 are plungers re-

Cut 5.

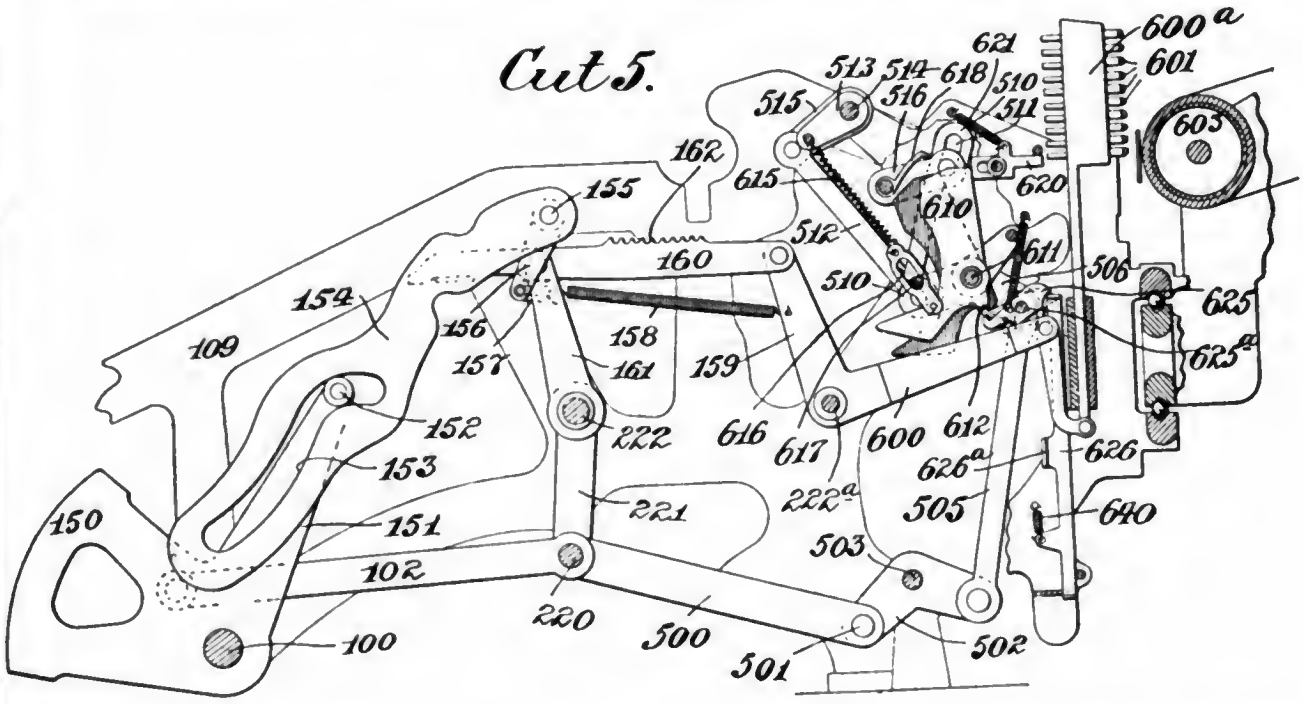

tracted by springs 621 and adapted to be struck by the hammers to propel them against the type bars 601.

Near to each hammer 610 is a hammer hook 625, each hook pivoted on a rod 625[a] and adapted to be moved by a hammer hook lifter 626 and retracted by a spring 627. The hooks 625 are adapted to engage with the hooks 612 of the hammers. Each hammer hook 625 has a projection 628 which extends toward the left under the next adjacent hook.

If it is desired to add and record an item, the item is first set up on the numeral keys of the keyboard and the

Deposition of Defendant's Witness, Charles N. McFarland, stipulated in from Massachusetts case.

main handle of the machine, which is connected with the main shaft 100, is pulled forward, rocking the segment lever 150 which has the projecting leg 151 carrying the roller 152 at its extremity, and which roller runs in a slot 153 and actuates the slotted link or lever 154, swinging it upon its pivot 155 in a left hand and upwardly direction carrying the series of crank arms 156 in the same direction, causing the arms 161 and 159 through the medium of the spring 158 to oscillate upon the cross shafts 222 and 222[a] carrying the rack bar 160 forward to accomplish the accumulation and at the same time lifting the extension 600 of the arm 159 which, through the medium of suitable connections 650 lifts the type carrier 600[a], bringing the number selected on the keys to the point of print.

At the beginning of the upward movement of the extension 600 of the lever 159, the extension 626[a] of the hammer hook lifter 626, which impinges upon the underside of the end of the extension 600 of the lever 159 is allowed to move upward under the influence of the spring 640, carrying the lifter 626 upward against the hammer hooks 625 swinging the hook upon its opposite end out of the pathway of the hook 612 upon the hammer 610. This movement of the lifter 626 and the hammer hook 625 takes place, as before stated, immediately upon the beginning of the movement of the extension 600.

During the forward movement of the handle and the parts 150, 151, 152 and 154, which I have just described, the links 102, connected to the segment lever 150 are drawn forward carrying the cross shaft 220 and the swinging links 221 with them causing the link 500 to oscillate the bell crank 502 upon its pivot shaft 503 and, through the medium of the link 505, causing the crank 506 to be oscillated upon its pivot shaft 611 and causing the arms 507 to carry the vibrating shaft 508 to its position toward the back of the machine, thus moving it out

Deposition of Defendant's Witness, Charles N. McFarland, stipulated in from Massachusetts case.

of the way of the hammers 610 preparatory to their release to strike the plungers 620. The oscillation of the arms 507 and shaft 611 and also the arm 506 operate the spring charging mechanism for the hammers through the medium of the link 512 which is connected to the lower end of the bell crank lever 506 and which moves in an upwardly direction operating to oscillate the arm 515 on its pivot shaft 514 carrying with it the arms 513, thereby stretching the springs 615 preparatory to the operation of driving the hammers against the plungers 620.

Also connected to the lower end of the bell crank lever 506, is a link 510 which projects upwardly and is connected to an arm 516. The oscillation of the crank 506, as just described, also operates to cause an upward oscillation of the arm 516, and toward the end of the stroke of the main handle of the machine, the broad pawl 618 is thus lifted out of engagement with all the hammers causing their release. By means of suitable slotted connections of the link 505 with the crank 506, and of the slotted link 510 at its upper end with the arm 516, the proper timing of the movement of the hammer hook lifter 626, and therefore the oscillation of the hammer hooks 625, is secured and the forward movement of the arms 507, carrying the shaft 508 toward the back of the machine and also lifting the arm 516 to release the hammers through the medium of the slotted link 510, is such that the hammer hooks 625 are swung out of an engaging position with the hooks 612 on the hammers 610 at a time considerably previous to the lifting of the broad pawl 618 which releases the hammers.

The return of the main operating lever of the machine to its original position reverses all the movements which I have just described, causing the parts to assume their normal positions.

Q. 26. Do you find in the prior art any mechanism performing the function of automatically indicating zeros to

Deposition of Defendant's Witness, Charles N. McFarland, stipulated in from Massachusetts case.

the right of a number enumerated on a machine where the zeros are necessary to complete the number but are not struck upon the keys?

A. I do in the Wythe patent No. 445582. In this patent there is disclosed a mechanism to indicate in a cash register the items representing the amount of the customer's purchase. When the keys are depressed the appropriate numbers are displayed on disks which are brought up within the line of vision of the customer. There are no zero keys on the machine and the mechanism is so arranged that when a number is struck requiring the enumeration of zeros to the right for its completion, the disks displaying the zeros are automatically brought within the line of vision by a bent member overlapping the recording disk support to the left in a manner similar to the construction of the hammer hooks in defendant's machine, causing zeros to the right of any number depressed to be automatically displayed to the eye of the customer. The elements of claim 14 are not found in this Wythe structure in their entirety, but the idea of automatically registering or recording zeros is fully disclosed therein.

Q. 27. Do you agree with Mr. Felt that the elements of claim 15 of patent 465255 are found in the defendant's machine?

A. I do not. This claim reads as follows:

> "15. The combination, with recording disks 81 and actuating mechanism therefor, of hammers 87 and pawls 89, having flanges 94, and pins 93, substantially as and for the purpose specified."

In the defendant's machine there are no "recording disk 81" with type rigidly mounted thereon, consequently there is no "actuating mechanism therefor". There are movable types and mechanism by which they are positioned and moved, but, as stated before, they are not constructed or arranged to operate like the devices of the

Deposition of Defendant's Witness, Charles N. McFarland, stipulated in from Massachusetts case.

claim. There are no "hammers 87" adapted to propel the platen paper and inking ribbon against the rigid type. There are hammers which are adapted to propel movable types against the inking ribbon, paper and platen, like in a typewriter. There are no pawls 89 adapted to detain or release the hammers and having flanges 94 and pins 93. There are hammer hooks which do not have the function of the pawls 89. These hooks have projections 628 resembling to some slight extent the flanges 94, but they have no pins 93. The elements of this claim are not found in the defendant's machine.

Q. 28. Have you examined the complainant's patent No. 568021, and if so, do you understand it?

A. I have examined it and I believe I understand it.

Q. 29. Were you present at Chicago when Mr. Felt testified concerning the claims of this patent involved in this litigation, and did you hear his explanation of the elements of these different claims?

A. I did.

Q. 30. Please explain your understanding of the elements of claim 21 of this patent 568021.

A. This claim reads as follows:

> "21. The combination with the key releasing mechanism, of a hand lever E and mechanism connecting it to said releasing mechanism, said lever being movable to one position for operating the releasing mechanism and being also movable to another position for locking said releasing mechanism against action, substantially as specified."

The elements of the claim seem to be

1. A key releasing mechanism.
2. A hand lever E.
3. Mechanism connecting the hand lever to the key releasing mechanism.

These are all the mechanical elements mentioned in the claim.

The claim has some other words in it, viz.:

Deposition of Defendant's Witness, Charles N. McFarland, stipulated in from Massachusetts case.

"Said lever being movable to one position for operating the releasing mechanism and being also movable to another position for locking said releasing mechanism against action."

These words describe a mere mode of motion or manner of use. They do not designate any *thing* or *element*.

The whole claim, therefore, seems to comprise three mechanical elements and two ways of using one of them. The claim is, therefore, difficult to understand.

Mr. Felt correctly described in his testimony the first of these elements, "the key releasing mechanism." In effect this mechanism under the usual operation of the machine of the patent automatically releases the keys after one item has been enumerated on the machine to permit them to be restored to original position so that another item may be enumerated.

It is obvious that if the keys are not so automatically released and restored the continual actuation of the machine will cause the item set up on the machine to be indefinitely repeated when its handle or main operating lever is actuated.

If the keys are released previous to an actuation of the handle or operating lever of the machine it enables the operator to change the keys without adding in or accumulating upon the total wheels the item first set up on the keys.

That is, preventing the automatic release of the keys performs the operation of "repeating" or "multiplying" the items depressed, and releasing the keys previous to actuation and changing the items enables correction to be made before the item is accumulated or recorded.

The function of the second element of the claim "a hand lever E" is to enable the releasing mechanism to be positively moved or held against movement in order that either of the above purposes may be accomplished.

Deposition of Defendant's Witness, Charles N. McFarland, stipulated in from Massachusetts case.

In the patent the hand lever E is described as follows:

"The releasing frame is also made operable by an independent lever, in order to enable the operator to correct mistakes made in depressing the keys before adding or printing. This lever, which is shown at E, Fig. 3, resembles an inverted T in shape, and is stationarily pivoted at E'. One arm of the lever carries a projection E^2, adapted to bear down upon and depress the crank arm D^5, when the upper end of said lever is moved toward the rear of the machine, such movement releasing the key coupling latches and allowing the keys to resume their normal positions, as will be understood from what is written above. A spring E^3 acts on this lever E to draw it towards the front, and a catch E^4 normally holds the lever in the position shown at Fig. 3. The end of the other arm, E^5, of the lever is rounded as shown, in order that it may be made to keep the latch D^7 out of engagement with the crank arm D^5 whenever the operator desires to repeat any number without resetting the keys for such numbers. In order to accomplish this repetition the operator releases the catch E^4 and the lever immediately swings toward the front of the machine carrying the rounded end E^5 into position, where it will prevent the latch D^7 from assuming its operative position. The hand lever C^{15} may, while the latch is thus held, receive any number of strokes desired, and with each one it will add and record the sum represented by the set keys without releasing the keys. This release is readily effected at any time, however, by moving the lever E back in the same manner as in releasing the keys in correcting mistakes in setting."

The third element of the claim "mechanism connecting the hand lever to the key releasing mechanism" is as Mr. Felt says, "the lever D^5 mounted on the rock shaft D^3." That is, it is a lever which is pushed downward by contact with the foot of the lever E when the latter is manually rotated on its pivot.

The final clause of the claim does not add any mechanical element to the above combination, unless the operator be so considered, but this clause explains why

Deposition of Defendant's Witness, Charles N. McFarland, stipulated in from Massachusetts case.

the lever E is restricted to one which is "hand operated," because the hand of the operator is the thing which moves it to the two positions stated and the claim contains no other element by which it can be moved.

To understand this claim and why it was possibly restricted to "the hand lever E" it is necessary to know what was in the prior art.

At the time Mr. Felt made the application which resulted in the issue of patent No. 568021, that is, June 14, 1895, repeat keys and correcting keys were already in existence. By a "repeat" key is meant one by the depression of which, or the manipulation of which, an item once set up on a calculating machine could be indefinitely repeated without setting it up again. By a "correcting" key is meant one by the manipulation of which an item set up could be changed or corrected before the machine was actuated.

The novelty of this claim 21 of patent 568021 resided in combining the functions of the repeat key and of the correcting key in a single hand operated lever E which could be moved to one of two positions to "repeat" or "correct" as might be desired.

In the Richson patent No. 466836 there is shown a mechanism comprising numeral wheels and actuating mechanism therefor which includes keys. The structure was so arranged that when any particular key was depressed it co-operated with the numeral wheel shaft to rotate the latter a proper distance to bring the proper number on the numeral wheel to the point of sight. If a wrong key was depressed the numeral wheel and its shaft was adapted to be rotated in a reverse direction by the depression of a separate key, one of which was provided for each numeral wheel shaft, and this key would restore the numeral wheel shaft and the keys to zero position in order that the proper key could thereafter be

Deposition of Defendant's Witness, Charles N. McFarland, stipulated in from Massachusetts case.

depressed. In other words, it was a correcting key having the function of a hand lever E of the Felt patent 568021 when the lever was so actuated that the releasing mechanism was brought into operation to enable an item to be changed.

In the patent to Craig, No. 434251, there was shown a structure called "an adding machine" comprising keys and numeral wheels and provided with a key (50) for returning the hundreds wheels (3) and its pointers (53) to zero. By means of this mechanism an erroneous number indicated by the position of the pointer could be changed by depressing the key 50 to restore this wheel to zero and to allow the proper number thereafter to be set up thereon. In other words, it was a correcting key having one of the functions of the hand lever E of the Felt patent.

In the patents to Weiss, Nos. 496240 and 443024, there is shown a cash register comprising numeral wheels and keys and a series of zero keys by means of which, if a wrong key has been actuated, the zero key can be used to reset said key to its normal position to permit a new item to be written. In other words, it is a correcting or error key having one of the functions of the hand lever E of the Felt patent.

In the Burroughs patent, No. 504963, there is shown an early type of the well known Burroughs Adding Machine which comprises numeral keys adapted to limit the range of action of the actuating mechanism of the numeral wheels, and numeral wheels and a key releasing mechanism whereby the keys are released and restored to their original position to permit of a new item being enumerated after such release. That is, there is found in this Burroughs machine a correction key arranged in substantially the same manner as that which is found in the defendant's machine.

Deposition of Defendant's Witness, Charles N. McFarland, stipulated in from Massachusetts case.

There is also provided in this Burroughs machine a repeat key by the depression of which the function of the key releasing mechanism is interrupted and which, when the handle is actuated, causes the indefinite repetition or multiplication of the item which has been set up on the keys. The key in its position and purpose resembles the corresponding device in the defendant's machine more nearly than it resembles the hand lever E of the Felt patent. In this Burroughs machine there can thus be found a repeat key and a correcting key arranged substantially in the manner shown to the defendant's machine and at a considerably earlier date than the application for a patent by Mr. Felt on the machine embodying the hand lever E.

In the McCaskey patent, No. 616132, the application for which was filed some months prior to the application of Felt, which resulted in patent 568021 there is described and shown a mechanism having numeral wheels, numeral keys, actuating mechanism for the numeral wheels and the other co-operating mechanism of an adding machine which is provided with a multiplying or repeat key and an error or correcting key. This structure somewhat resembles that of the defendant's machine, but not as closely as does the Burroughs device which I have just mentioned. The mechanism of this McCaskey patent is very complicated and I will not go into the detail of it as it is fully described in the patent. The description of the repeat key is found at page 9 of the patent, lines 87 to 122, inclusive, and the description of the error key is found at page 10 of the patent, lines 110 to 141, inclusive.

Q. 31. Do you agree with Mr. Felt in his opinion that the elements of claim 21 of patent 568021 are found in the defendant's machine, and if not, please give your reasons for your answer?

Deposition of Defendant's Witness, Charles N. McFarland, stipulated in from Massachusetts case.

A. No, I do not. There is a key releasing mechanism in defendant's machine but there is no "hand lever E", and there is no connection between such a lever or its equivalent, and the key releasing mechanism.

Mr. Felt finds the hand operating lever in the defendant's machine in a pivoted arm which is located in the interior of the machine and which could not possibly be reached by the hand of the operator in using the machine. It is impossible to grasp it without removing the case, which must not be done in the ordinary use of the machine, and if it could be reached by the operator after removing the case it would probably be wrongly manipulated because of the lack of a technical knowledge of mechanics on the part of the operator.

Mr. Felt's statement concerning the elements of the claim as he finds them in the defendant's machine is as follows:

> "Summing up the foregoing reference to the defendant's machine:
>
> "The 'key releasing mechanism' of the claim is represented in defendant's machine by the rock shaft above referred to.
>
> The hand lever E of the claim is represented in defendant's machine by the hand operated lever above described as being located at the left hand side of the machine and occupying a position oblique to the base, the upper end being connected to the crank just inside the frame at the left hand side of the machine, mounted on the rock shaft of the key releasing mechanism.
>
> The mechanism connecting it to said releasing mechanism is this crank on the rock shaft just mentioned.
>
> > 'Said lever being movable to one position for operating the releasing mechanism and also being movable to another position for locking said releasing mechanism against action'
>
> is represented in defendant's machine by the hand operated lever when in its normal position, that is, when the key marked 'rep't' is in its raised position,

Deposition of Defendant's Witness, Charles N. McFarland, stipulated in from Massachusetts case.

which permits the key releasing mechanism to operate and perform its function of releasing the keys, and by the hand operated lever when it is in its other position with its lower end raised to a point and position at which the key releasing mechanism is locked against action, so that any keys depressed will remain depressed throughout repeated operations of the main operating lever of the machine and avoid the necessity of resetting the keys over and over again and the same when one number is to be repeatedly added and printed by the machine. And this hand operated lever is moved to its raised position and dropped back to its other position by manipulation of the key on top of the machine, marked 'rep't'."

Concerning this statement Mr. Felt knows as well as I do that the thing which he called repeatedly a hand operated lever is not a lever and is not operated by hand and could not be so operated.

Mr. Felt does not understand the operation of the defendant's machine. The pivoted arm which he mis-calls a hand operated lever is an essential part of the key releasing mechanism. When it is in its lowermost position (which is its normal position) it co-operated with a roll or pin on a crank mounted on the main shaft of the machine and with the other crank and roll referred to automatically releases the keys after the accumulating operation had taken place. That is, it has precisely the same functions as the releasing mechanism of the Felt machine. In performing this function it has the same kind of an oscillation and endwise movement as the vibrating frame of the Felt machine.

This pivoted arm in the defendant's machine can be moved only to one position other than its normal position. That is, it may be moved upward out of contact with the crank on the main shaft by depressing the "repeat key." In such case the key releasing mechanism of which it forms an essential part does not perform its

Deposition of Defendant's Witness, Charles N. McFarland, stipulated in from Massachusetts case.

function and the item set up on the keys may be indefinitely accumulated into the machine or multiplied or repeated.

Comparing these parts with the elements of the claim I find that there is a key releasing mechanism in the defendant's machine, but no hand lever E and consequently no connection between it and the key releasing mechanism. The thing which Mr. Felt calls a hand lever is an essential part of the key releasing mechanism and it is not "movable to one position for operating the releasing mechanism" and "movable to another position for locking said releasing mechanism against action." In its first position this arm does not operate the releasing mechanism but operates as a part of it. In its second position the releasing mechanism is not locked at all, but can be freely and readily moved by depressing the correcting key.

In the defendant's machine there is a "repeat" key and an "error" or "correcting" key. These are not united in one oscillating lever, as in the Felt machine, and the thing which Mr. Felt calls the "hand lever" in defendant's machine cannot be operated by hand and its movement has no effect on the correction of items set up on the keys.

The construction of the parts, the purpose of the parts, the number of the parts, and the mode of operation of the parts are all different in the two machines.

January 2, 1908.

Testimony resumed.

Present, Counsel as before.

The witness continuing his answer to Question 31 says:

A. In order to make it clear that the push arm referred to by Mr. Felt in the defendant's machine and called by him "a hand operated lever" is not the equiva-

Deposition of Defendant's Witness, Charles N. McFarland, stipulated in from Massachusetts case.

lent of the hand operated lever E of his claim 21. I have prepared a number of drawings of this arm and its connected parts and using them as illustrations shall describe the mode of operation of the different elements referred to, comparing them at their several stages with the corresponding functions of the lever E referred to.

Of these drawings Cut 6 is a view of the push arm and its connected parts looking at them from the right hand side of defendant's machine, the intervening mechanism being indicated in dotted outline.

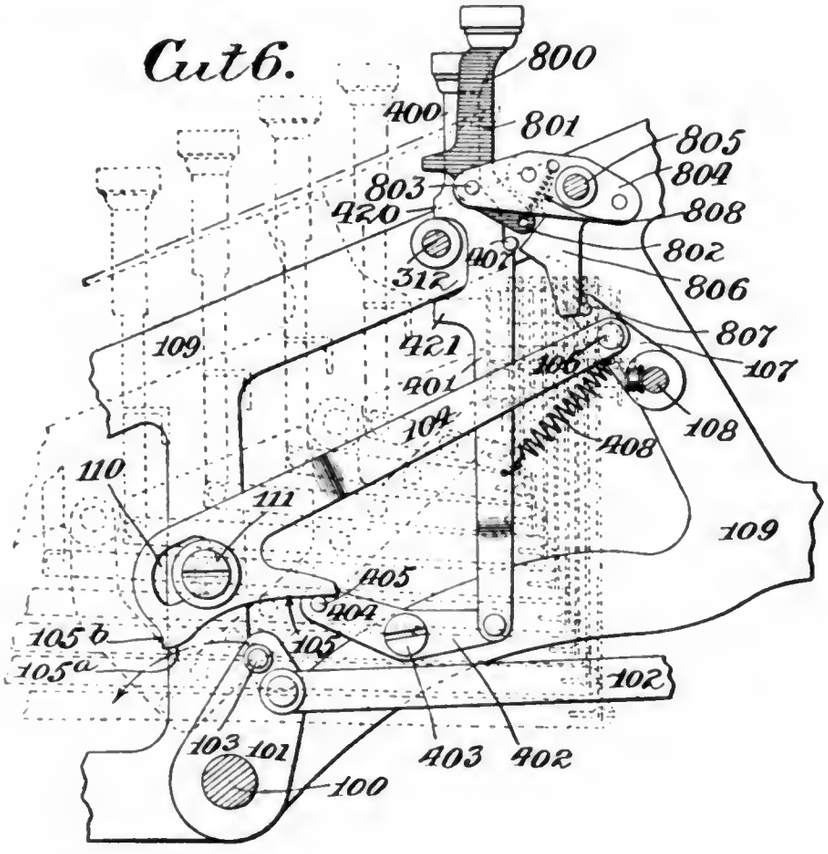

Deposition of Defendant's Witness, Charles N. McFarland, stipulated in from Massachusetts case.

Cut 7 is a view of the same parts with the intervening mechanism omitted.

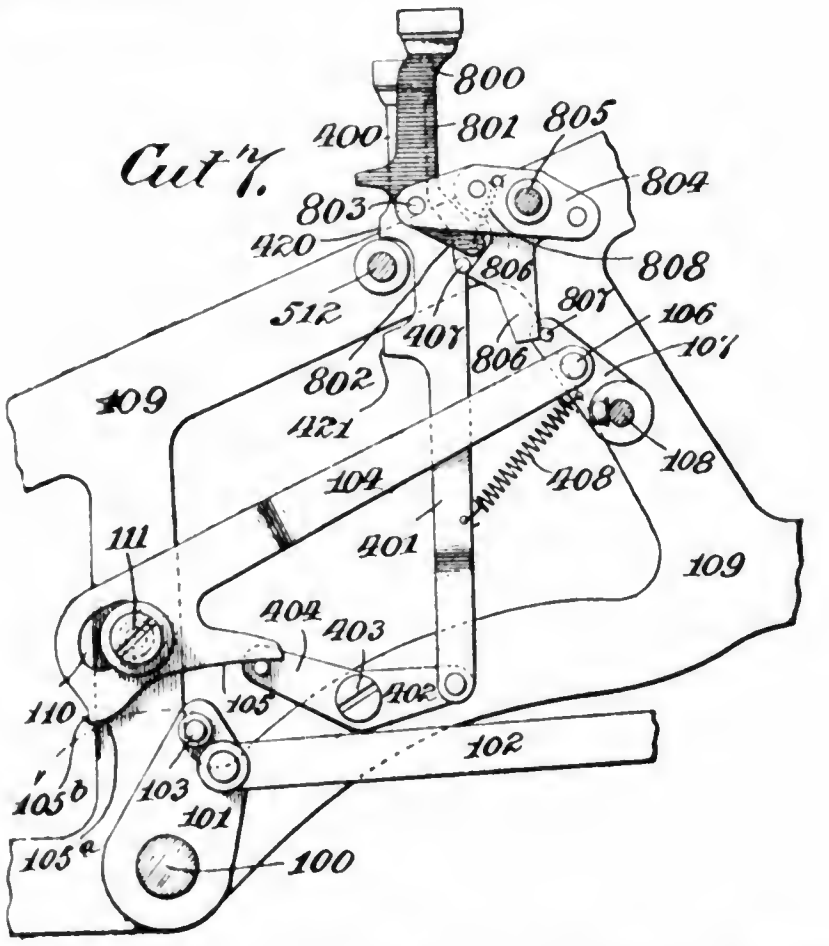

In Cuts 6 and 7 the repeat key is shown depressed and the correcting key undepressed.

Cut 8 is a view of the same parts showing both keys depressed.

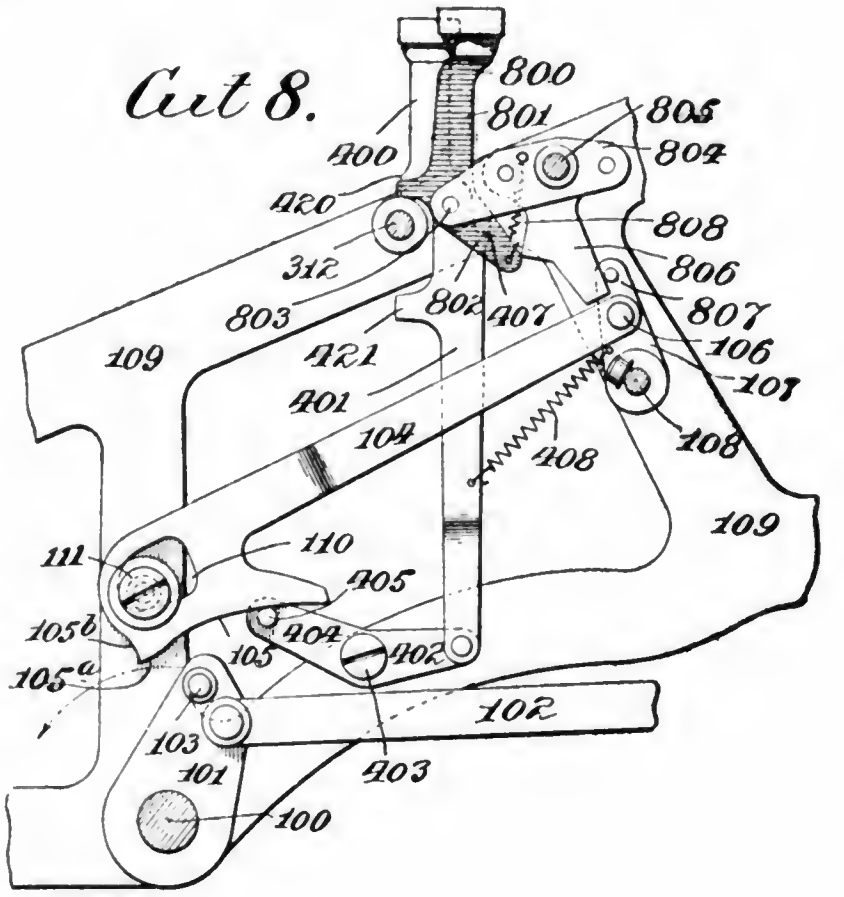

Deposition of Defendant's Witness, Charles N. McFarland, stipulated in from Massachusetts case.

Cut 9 is a similar view showing the repeat key undepressed and the correcting key depressed.

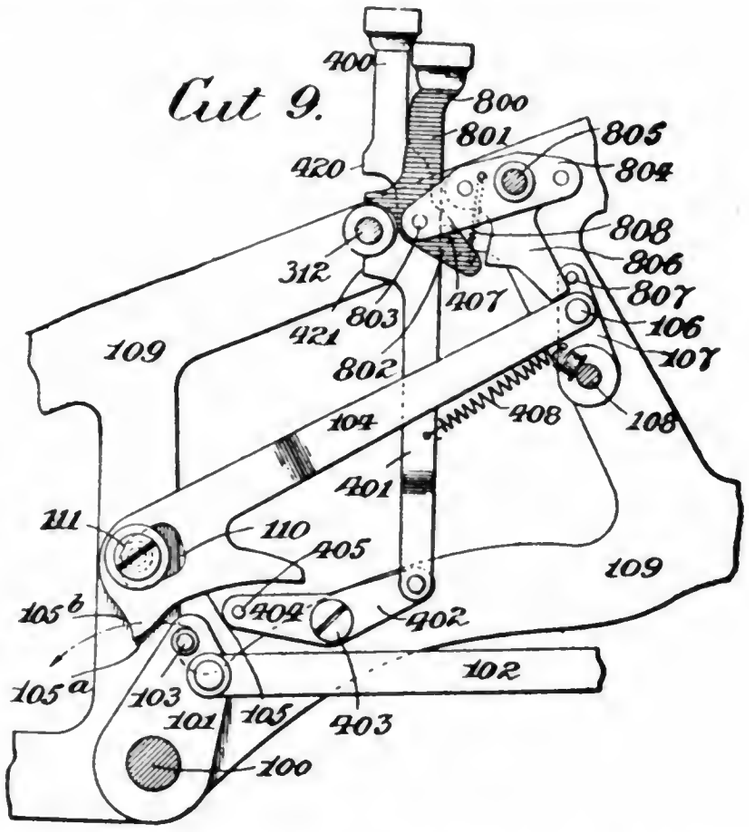

Cuts 10 and 11 are views showing the parts with both the repeat key and correcting key undepressed; in Cut 10 the push arm is shown in its normal position before the handle of the machine has been actuated, and in Cut 11 this push arm is shown in its farthest position toward the right, which is its position when it has been engaged by the roller on the handle shaft and is about to become disengaged therefrom.

Deposition of Defendant's Witness, Charles N. McFarland, stipulated in from Massachusetts case.

Cut 10.

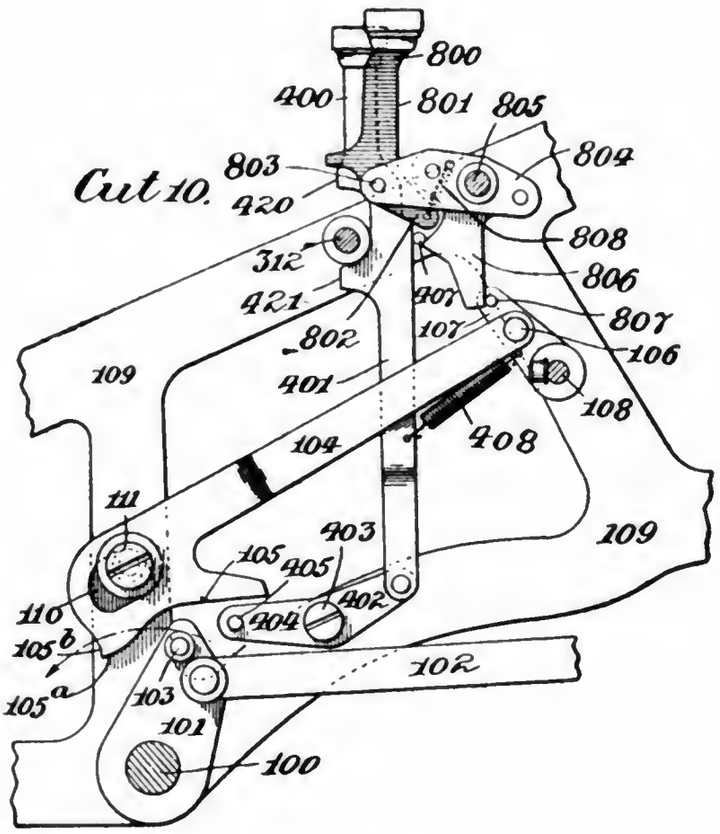

Cut 11.

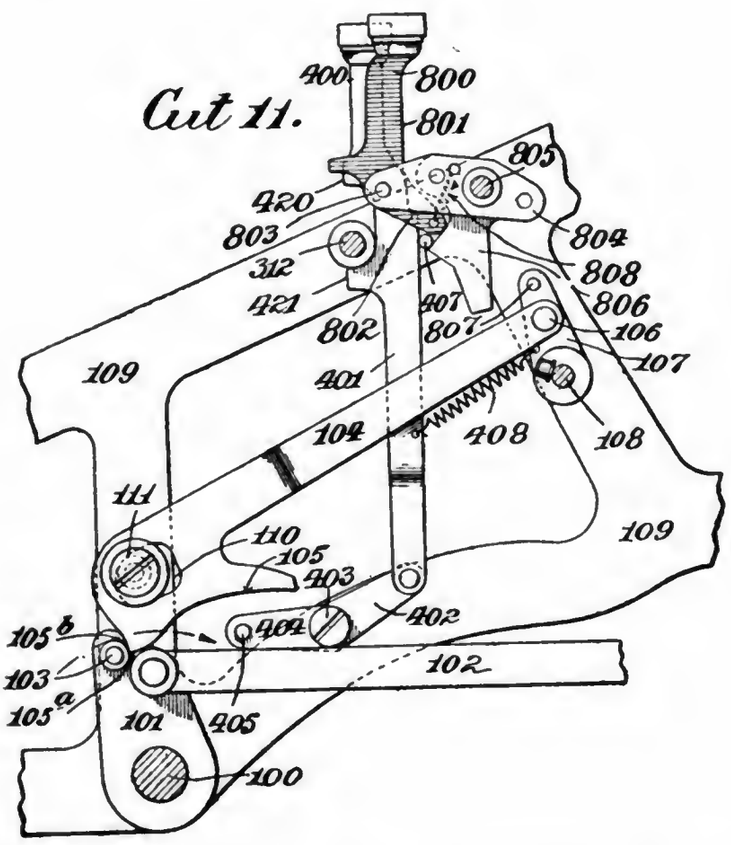

The mechanism in defendant's machine, so far as it relates to the repeat key, is described in United States patent No. 874,107, issued to me December 17, 1907, and I shall letter the different parts shown in these figures with

Deposition of Defendant's Witness, Charles N. McFarland, stipulated in from Massachusetts case.

the same letters used in that patent to designate the same parts.

Referring to these cuts, 100 is the actuating shaft of the machine oscillated by the main handle. 101 is a crank secured to this shaft and 102 is a link connecting the crank to the carrying and printing mechanism. 103 is a roller pivoted on the crank 101 and adapted to engage with the lower surface 105 of the push arm 104, which arm is secured by a pivot 106 to a crank 107, the other end of which is secured to a shaft 108 supported in suitable bearings in the frame 109 of the machine. I have designated the part of the lower surface 105 which engages with the roller 103 as 105A and another part of the surface of the arm 104, which also engaged with the roller 103, as 105B.

The arm 104 is provided with a slot or opening 110 to permit it to move in all directions at that place and also to allow it to be supported upon a pin 111 projecting from the frame 109 of the machine, and which pin passes through the slot.

400 is a repeat key provided with a long stem 401, which is pivoted at its lowest extremity to an angle lever 402 adapted to oscillate on a pivot 403, and which lever has an arm 404 on which is mounted a pin 405 adapted to engage the under surface 105 of the arm 104 to raise the arm 104 out of contact with the roller 103. The stem 401 is notched or recessed to engage a pin 407 on the frame of the machine in order to hold the key in a depressed position. A spring 408 serves to restore the key 400 to its original position when the key stem 401 is disengaged from the pin 407 and it also serves to retain it in such engagement before its release. This spring 408 also serves to retract the crank 107 after it has been moved towards the right.

A shaft 312 on the frame of the machine and which has

Deposition of Defendant's Witness, Charles N. McFarland, stipulated in from Massachusetts case.

uses not necessary to describe now, being in a convenient position, is used to limit the movement of the key stem 401, which is formed with two wings 420 and 421 adapted to embrace this shaft.

800 is the correcting key having a stem 801 and a foot 802 hinged to a pivot 803 of a frame 804 adapted to rock in a shaft 805 mounted in the frame of the machine. A downwardly projecting leg 806 of this frame co-operates with a pin 807 on the crank 107 to move the crank to the right when the key 800 is depressed. A spring 808 retracts the key 800 to its original position after depression.

The key releasing mechanism of the defendant's machine is fully described in the patent 874,107 taken in connection with the parts shown in these figures which I have made. This key releasing mechanism comprises the push arm 104, the crank 107, the shaft 108 and the rolls 120. There is but one function which these several parts can perform under any manipulation of the repeat key and correcting key, and that function is the release of the numeral keys which had been depressed.

I have not considered it necessary to show the connection between the rolls 120 and the numeral keys, but will simply state that when the shaft 108 is rocked in the position shown in Figures 3 and 4 and 6, any numeral keys which have been depressed will be released and allowed to return to their normal positions.

I will now trace the movement of these several parts and compare them with the movement of the device shown in the Felt patent, when the mechanism of both devices is employed to get the results which the parts were designed to secure.

I will first suppose that the operator desires to add a series of items or different amounts so as to take their total and record it. This operation necessitates the restoration

Deposition of Defendant's Witness, Charles N. McFarland, stipulated in from Massachusetts case.

of the keys which have been depressed to enumerate one item before the next item can be enumerated. When the numeral keys, representing an item are depressed, the shaft 100 is actuated so as to oscillate the crank 101 carrying its roll 103 to the left, as indicated by the arrow in Figures 1 to 4. This movement of the shaft 100 results from the actuation of the main handle in the machine, which the operator pulls forward as far as it will go. The roll 103 in passing the surface 105A of the arm 104 lifts up the arm and moves it out of its path and when the roller has passed beyond the arm toward the left the latter simply drops back in its original position, that is, the parts have started from the position shown in Figure 5 and then have moved to a position where the crank 101 is to the left of the arm 104, but the latter has returned to the position which is shown in Figure 5. The further movement of the handle 100 and crank 101 toward the left and its partial movement in the reverse direction has no effect upon the arm 104 until the roll 103 comes into contact with the surface 105B of the arm 104, when, by such contact, it pushes the arm 104 toward the right (as shown in cut 11), through the pivot 106 moves the crank 107 and shaft 108 and by means of the rolls 120 permits the automatic restoration of the numeral keys to their original position in order that a new item may be enumerated. During this operation the arm 104 performs the only function for which it is designed and the only function which it can perform and during such operation is not and cannot be disturbed or manipulated by the hand of the operator so that it cannot truthfully be called a "hand operated" arm or lever.

When an item is being enumerated upon the machine of the Felt patent and the numeral keys are restored to their original positions and another item is then enumer-

Deposition of Defendant's Witness, Charles N. McFarland, stipulated in from Massachusetts case.

ated on such machine, that is, while the operator is using the Felt machine in the usual ordinary way the hand lever E of that machine remains stationary and has not been used and during such operation has no purpose or function and is not moved by co-operation with any of the moving parts of the machine. In fact the only motion that the lever E can possibly have is when it is moved by the hand of the operator and during the enumeration of an item it is purposely held stationary and is not moved to either of the two positions to which it may be moved.

I will now suppose that the operator, after he has set up an item on the numeral keys on the defendant's machine and before he pulls the handle, discovers that he has set up the wrong item and desires to change the figurs in one or more denominational series. To do this he would use the correcting key 800 in the following manner: He would depress this key which would swing the frame 804 and move the projection 806 against the pin 807 to oscillate the crank 107 and consequently the shaft 108 and move the rolls 120. This would allow the release of the numeral keys to permit them to return to their original position. It will, of course, be noticed that when the crank 107 is moved toward the right to accomplish this purpose (as shown in Cut 9) it will pull over the arm 104 to the right, because it is pivoted to that arm at 106, but that the arm 104 has not assisted in any way in moving the crank 107 and the shaft 108 and if it has had any influence at all on such movement has tended to retard it. It will therefore readily be understood that in correcting an item on the defendant's machine, the arm 104 has not been used at all.

If the operator has similarly enumerated an item on the keys of the machine of the Felt patent and desires to change it, or correct it, before actuating the main

Deposition of Defendant's Witness, Charles N. McFarland, stipulated in from Massachusetts case.

handle he will push the hand lever E over from him toward the right, and this movement of the hand lever E actually operates the releasing mechanism of the numeral keys and restores them to their original position. There is no other way of correcting an item in the machine of the Felt patent.

Mr. Felt is, therefore, entirely mistaken in his opinion that any actuation of the arm 104 and the results derived therefrom in correcting an item bears any analogy to the actuation of the hand lever E described in his patent.

Of course it would be possible if the casing was taken off of defendant's machine and part of the mechanism was removed and the machine disorganized by so doing for the operator to reach down and grasp the arm 104 and move it toward the right and thus oscillate the shaft 108 to the crank 107, but this would be unpracticable and foolish.

I ought to say that there is another way of correcting an item on defendant's machine which consists in depressing the right key in any series when a wrong key has been depressed in that series. This great advantage is secured by a peculiarity of construction of defendant's machine not resembling anything in the Felt device. The arm 104 has nothing whatever to do with the mechanism by which this flexibility of the key board of defendant's machine is secured.

I will now suppose that the operator desires to repeat an identical item several times in the actuation of the machine. After he has written it once by depressing the proper numeral keys he depresses the repeat key 400. This oscillates the lever 402 on the pin 403 and moves upward the arm 404 and brings the pin 405 in contact with the surface 105 of the arm 104 as shown in Figure 2. The main handle is then actuated and it

Deposition of Defendant's Witness, Charles N. McFarland, stipulated in from Massachusetts case.

will be observed that as the roller 103 cannot then engage with the surfaces 105 A and 105 B on the arm 104 this arm does not oscillate the crank 107 nor the shaft 108, and consequently the numeral keys are not released when the handle of the machine is actuated and are not required to be reset but allow the same items to be repeated again and again on the numeral wheels. That is, the releasing mechanism has had its function interrupted by lifting up the arm 104 which forms a part of it. It will be observed that in this last operation the arm 104 has been lifted through a train of intermediate mechanism and has not been reached by the hand of the operator.

If the operator desires to repeat an item enumerated on the keys of the machine of the Felt patent he releases the catch E4 which permits this hand lever E under the tension of its appropriate spring to at once move toward the front of the machine and the item is thereafter repeated as described in the Felt patent. That is unlike the defendant's machine in which the arm 104 is positively moved as part of the releasing mechanism, in the Felt machine the hand lever E is allowed to move to lock the releasing mechanism against any movement thereafter, manual or otherwise, provided the item is to be repeated, because any movement of this lever E in the reverse direction will unlock the keys and restore them to their original position.

In the defendant's machine the parts are so arranged that the repeat key and correcting key can both be used simultaneously, so that after an item has been repeated it may be changed, and the changed item repeated without any effective use of the arm 104 at all. This operation is illustrated in Figure 3 in which it will be seen that the arm 104 has been lifted by the depression of the repeat key 400. The depression of the correcting key

Deposition of Defendant's Witness, Charles N. McFarland, stipulated in from Massachusetts case.

800 moves the crank 107 to permit of the release of the keys and to enable a new item to be enumerated thereon while the arm 104 still rides upon the pin 405. That is to say in the defendant's machine the function is accomplished which is precisely the same as though the hand lever E of the Felt machine had been moved to both of its optional positions at once. I know of nothing that would so strikingly illustrate the difference between the two mechanisms.

Q. 32. Please explain the elements of claim 47 of the patent 568021?

A. The claim reads as follows:

> "The combination with the carrying levers and their latches, of devices for moving the levers into position for carrying, such devices being also retracted partially immediately after thus moving the levers to allow the levers released from the latches to escape re-engagement therewith, substantially as specified."

The elements of this claim seem to be

1. The carrying levers.
2. Their latches.
3. Devices for moving the levers into position for carrying.

These are all the mechanical elements of the claim.

The claim contains also some other words, viz.:

> "Such devices being also retracted partially immediately after thus moving the levers to allow the levers released from the latches to escape re-engagement therewith."

This last clause, as will be readily observed, does not describe any mechanical element but a process or mode of operation or use of the third element mentioned, that is, the claim consists of three mechanical elements plus a process of using the last one of the three.

The claim accurately describes the three elements of

Deposition of Defendant's Witness, Charles N. McFarland, stipulated in from Massachusetts case.

which it is composed but does not accurately describe the process of using the third element.

I listened to Mr. Felt's explanation of the last clause of this claim with considerable interest and I noticed after describing the method of use of the devices for moving the levers he concluded with this expression:

> "The rocking frame together with the cams just described is an embodiment of the subject matter of that part of the claim last quoted, which reads as follows:
>
> " 'Such devices being also retracted partially immediately after thus moving the levers to allow the levers released from the latches to escape re-engagement therewith.' "

Referring to his testimony immediately previous to this remark I find that by rocking frame he means the "rock shaft N bearing a series of pins or arms O" and that by "cams just described" he means the cam piece N6 in the drawings. Concerning the combination of the rocking frame and cam piece he says:

> "The peculiar rocking movement of the rocking frame which gives it three positions, one, its extreme retracted position away from the numeral wheel, the other, that slightly returned towards the numeral wheel from its extreme retracted position and the other its extreme position nearest toward the numeral wheel is effected in the patent by means of a cam piece N6 in the drawing. This cam piece is mounted on and carried on the large cam C10, which in turn is pivoted on the stud C11, As the cam C10 rotates on its pivot carrying the cam C6 with it the latter transmits motion to the rocking frame heretofore described, the profile of the cam piece being such that it gives the rocking frame precisely the motions heretofore described. This motion is transmitted from the cam piece to the rocking frame through the bell crank lever N2, the connection N3, and the lever N4, fast upon the rock shaft N."

Deposition of Defendant's Witness, Charles N. McFarland, stipulated in from Massachusetts case.

From the foregoing I conclude that Mr. Felt would interpret the claim 47 to include the following elements:

1. The carrying levers.
2. Their latches.
3. Devices for moving the levers into position for carrying (that is, the rock shaft N and its pins O).
4. The cam N6.
5. The connection between the cam and the rocking frame (that is, the lever N2, the connection N3 and the lever N4).

I do not find the expression "rocking frame" in the Felt patent and there is no frame in the patent but there is a rock *shaft* with projecting pins. Mr. Felt probably used the expression so as more easily to show an apparent resemblance to defendant's structure.

The difficulty about this claim is that the process or mode of operation or use of the third element mentioned is not accurately described in the claim.

The description of this motion is as follows:

> "Such devices being also retracted partially immediately after thus moving the levers to allow the levers released from the latches to escape re-engagement therewith."

Deposition of Defendant's Witness, Charles N. McFarland, stipulated in from Massachusetts case.

I have made two sketches tending to illustrate what happens in the Felt machine when the elements which go to make up the combination of claim 47 are actuated in proper order as described in the patent. In Cut 12

Cut 12.

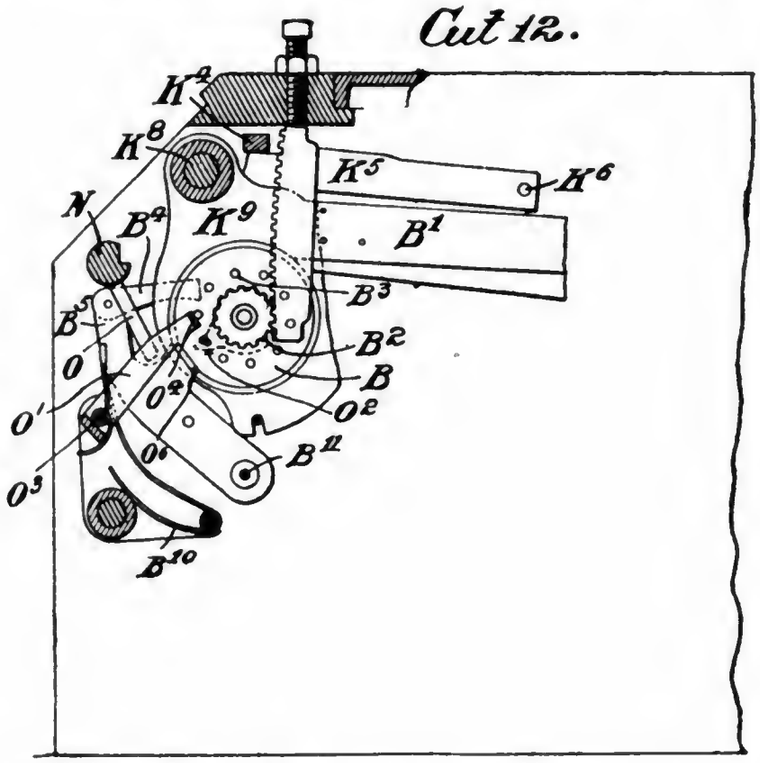

I show the parts in the position assumed by the rock shaft after it has been partially retracted in the manner described in the patent, and in Cut 13 I show the same parts in the positions which they assume when the rock shaft is completely retracted in the manner described in the patent.

Cut 13.

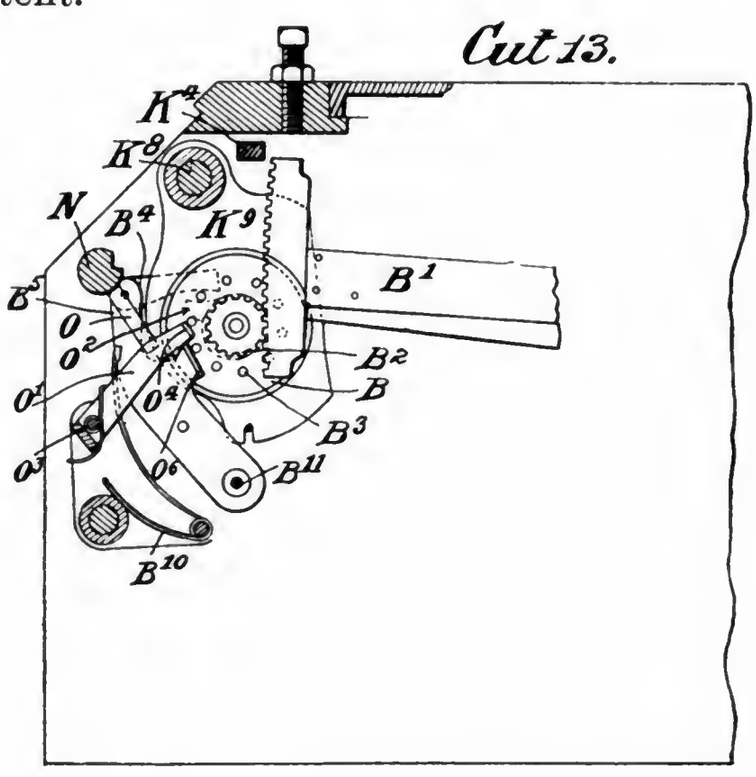

Deposition of Defendant's Witness, Charles N. McFarland, stipulated in from Massachusetts case.

In these two sketches I have used the same reference letters as are used in the patent in order to make the same clear. Assuming the parts to be in the position shown in Cut 12 and the numeral wheel to be rotated the cam O2 moves with the numeral wheel of which it forms a part or to which it is rigidly attached. In its rotation it moves the latch O1 toward the left and it disengages the same from the lug on the side of the carrying lever B5. Then as the handle of the machine continues to be actuated the rock shaft N is rocked and permits the pin O to move out of the way of the carrying lever which is pressed forward under the influence of its spring B10 and oscillates on its pivot B11 and co-operating with one of the pins on the wheel moves the wheel forward one tooth. The parts will then be in a position as shown in Cut 13 as can readily be seen.

As the handle continues to be actuated the rock shaft N is reversed in its movement and its pin O impinges against the offset portion of the carrying lever with which it is thus brought into contact and moves the carrying lever backward in order to bring the same to a carrying position to co-operate against another one of the pins on the numeral wheel. As the rock shaft N and its pin O reaches the extreme end of its stroke in this direction, it is partially immediately retracted into the position shown in Cut 12. Now it will be noted that the latch O′ under the influence of its actuating spring has become re-engaged with the lug on the edge of the carrying lever B5 but it will also be observed that the pin O has moved a slight distance beyond its re-engaging point so that the carrying lever is held by the latch in the position shown in Figure 7 and not by the engagement of the pin O with the offset part of the carrying lever.

If the claim 47 is referred to, it will be noticed that

Deposition of Defendant's Witness, Charles N. McFarland, stipulated in from Massachusetts case.

by the partial retraction of the carrying devices, that is, the shaft N and its pin O, the levers released by the latches have been moved by such partial retraction not "to escape re-engagement therewith" but actually re-engage therewith. In other words, the mode of motion or operation described in the claim has exactly the opposite effect to that attributed to it by the language of the claim. In a subsequent movement or rotation of the numeral wheel the carrying lever escapes re-engagement with the latch, because it is rotated out of engaging position by the cam O2 on the numeral wheel and moved forward in the direction of the numeral wheel under the influence of the spring B10, but, of course, such re-engagement is not escaped by any movement of the rock shaft and pin, but is due to the cam on the numeral wheel and the spring on the carrying lever mentioned.

Q. 33. Do you agree with Mr. Felt that the elements of claim 47 are found in the defendant's machine?

A. No, I do not, because in the defendant's machine the devices for moving the lever into position for carrying are not retracted partially immediately after such movement, and they do not allow the levers to escape re-engagement with their latches.

The carrying mechanism of the defendant's machine does not in the least resemble that of the subject matter of patent 568021. It is a mere accident that the words of the claim 47 which correctly describes the carrying mechanism of the Felt machine and its mode of operation can also be applied to the defendant's machine.

The defendant's machine has the three elements of the claim. That is, it has two elements which may be called carrying levers and latches, but the so-called carrying levers are flat plates carrying several pieces of mechanism, and bearing not the least resemblance to the levers of the Felt patent and the latches are rollers

Deposition of Defendant's Witness, Charles N. McFarland, stipulated in from Massachusetts case.

co-operating with one end of the flat plates having no similarity whatever to the thing called a latch by Mr. Felt. The word devices is so broad that it will cover any kind of mechanism or combination of mechanism and therefore covers the third element which is present in the defendant's machine.

These three elements as they are found in patent No. 568021 are present in Mr. Felt's prior patent 465255 in substantially the same form as they are present in this patent and the only new thing about them set out in the claim is the peculiar and particular manner in which they are said to be moved.

In the defendant's machine the elements referred to do not move in this manner.

Claim 47 requires that the devices for moving the levers into position for carrying shall be retracted partially "immediately."

In the defendant's machine the devices for moving the levers into position for carrying are very different from those of the Felt machine, but it so happens that in the operation of the machine they are retracted partially but not immediately.

The difference in movement of the devices in the two machines can be readily understood from a statement of what takes place in this machine after an item has been enumerated on the keys and the handle of each machine moves. As the handle is moved forward in each machine the carrying levers are at once moved into position for carrying. As the movement of the handles continues, in the Felt machine the devices for moving the carrying levers are immediately partially retracted. No such retraction occurs in the defendant's machine until the forward stroke of the handle has been entirely completed and the return stroke begins. By no possibility could the word "immediately" be applied to the time of

Deposition of Defendant's Witness, Charles N. McFarland, stipulated in from Massachusetts case.

this movement. Mr. Felt felt that the defendant's machine did not operate as his machine and therefore sought to find a resemblance between the elements used in the lever moving devices of his patent and those of the defendant's machine. In his machine these elements are the elements 4, 5 and 6 just mentioned by me, that is, the rocking frame N, the cam N6 and the connection between the cam and the rocking frame, and he sought to find in the defendant's machine elements to which similar names could be applied.

There is in defendant's machine at its rear a fixed shaft or red, which, among other purposes, serves to support the printing section or printing mechanism. On this fixed shaft at each side of the machine are pivoted two arms extending towards the front of the machine each provided with upwardly extending ears adapted to support a cross rod loosely carried thereby. The arms in front of the ears are curved on their upper edges and swung on their respective pivots on the rigid or fixed shaft and these edges are brought into contact with rollers carried on the ends of two other arms, each adapted to swing, and which arms are in turn connected by suitable links to the main handle of the machine.

There is pivoted to each carrying plate a downwardly extending link provided with a slot through which slot the cross rod referred to passes, so that when the arms are oscillated on their pivots under the action of the main handle of the machine the cross rod moves in the arc of a circle of which the pivots are the center and pulls down on the slotted links and moves the carrying plate so that it will swing on its pivot.

There is pivoted in front of each carrying plate an upwardly extending member which is provided with a laterally projecting pin or roller and which serves in connection with an extension on the plate as a latch, the

Deposition of Defendant's Witness, Charles N. McFarland, stipulated in from Massachusetts case.

same being held under tension toward the plate by means of a suitable spring.

Mr. Felt in his description of defendant's device calls the cross rod engaging with the slotted links a "rocking shaft," and he calls the combination of this cross rod and the two swinging arms a "rocking frame," and assumes in his description of the mode of operation of the defendant's machine that this cross rod has the same function as the rock shaft N of his patent, and that the slotted links have the same function as the pins O of his patent.

Mr. Felt knows just as well as I do what a rocking shaft is. It is a well known mechanical term and is applied to a shaft or bar adapted to turn in suitable bearings so that it has an oscillating movement on its own center without being given a complete rotation. It is, of course, conceivable that a rock shaft itself might be moved and so might oscillate around some other center while at the same time it was moving on its own center, but when it is called a "rock shaft" it is intended to indicate to a person skilled in the art that it is a rod adapted to oscillate backward and forward on its own center. The cross rod in defendant's machine has no such motion and cannot be aptly described by the expression "rock shaft." It moves in the arc of a circle around a center which is coincident with the center of the fixed rod at the rear of the machine.

The pins O of the Felt machine are pins secured to the rock shaft N and which oscillate with it, each pin moving as radius of the segment of a circle swept by it during its oscillation. The pins are rigidly secured to the rock shaft N just as the spokes of a wheel are fixed to its hub. The slotted links of the defendant's machine are moved by their co-operation or engagement with the cross rod which I have referred to, in substantially a ver-

Deposition of Defendant's Witness, Charles N. McFarland, stipulated in from Massachusetts case.

tical reciprocation and are fixed to the carrying plates and not free therefrom as in the Felt patent.

Mr. Felt says in his testimony that two arms on the side of the defendant's machine in combination with the cross rod "constitutes the swinging frame, the operation of which is decidedly that of a rock shaft, which it would be, were the hubs of these arms joined, or were the hubs pinned to the shaft on which they are pivoted." This is not true unless the rock shaft were an enormous cylinder having its center in the fixed shaft at the rear of the machine and its circumferences coincident with the outer surface of the cross rod referred to, and, of course, the existence of such a member would interfere with the action of all the other parts of the machine located in that end of the machine.

The fact remains that although by some change of construction the parts of the defendant's machine might be made as suggested by Mr. Felt into a rock shaft, they have not been so made and the way in which they operate is not the way in which a rock shaft does operate.

I have made a sketch which will serve to illustrate the manner in which the parts about which I have been speaking are moved in the defendant's machine. In this sketch

Cut 14.

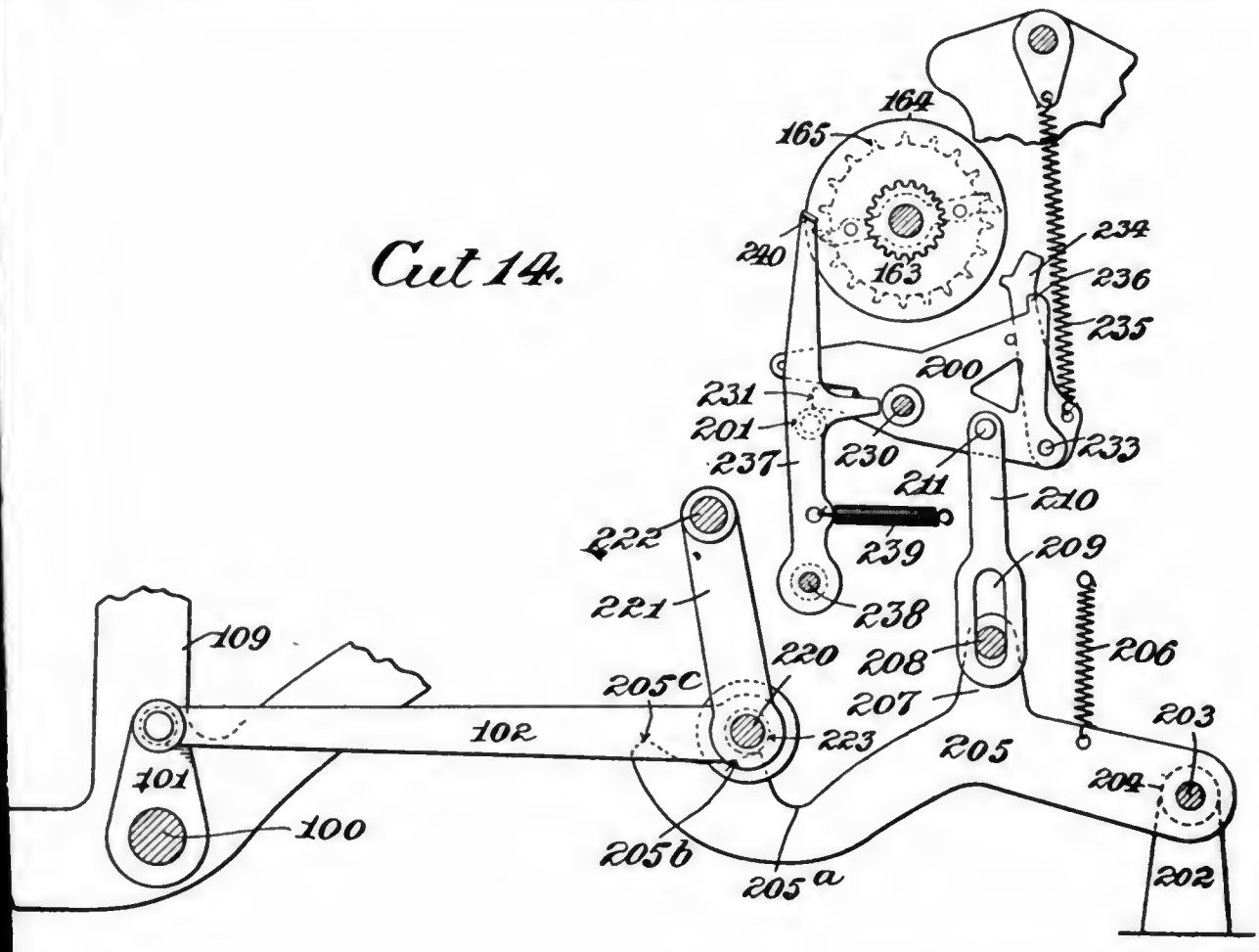

Deposition of Defendant's Witness, Charles N. McFarland, stipulated in from Massachusetts case.

which I have called Cut 14, the parts of the carrying mechanism of the defendant's machine are in the same relative position as the parts of the Felt machine in Cut 12, that is, the carrying levers 200 are engaged by their latches 201 and the devices for moving the carrying levers into position, are inactive.

These devices are as follows: A post 202 is mounted at each side of the machine at its rear. These support a fixed shaft 203 arranged transversely of the machine and carrying hubs 204 of swinging arms 205 which, after movement, are retracted to position by springs 206. These swinging arms are each supplied with ears 207 which carry a cross rod 208 adapted to move in a slot 209 in a link 210 secured by a pivot 211 to the carrying lever 200. The main shaft of the machine 100 is oscillated by its handle and is provided with a crank 101 on each side of the machine, and each of these cranks is pivoted to a link 102 which in turn is secured to a cross shaft 220 pivoted also to a pair of swinging arms 221 suitably mounted on the shaft 222. The shaft 220 is provided with rollers 223, one for each arm 205, and which rollers are adapted to engage the upper surface of the arms 205, and which upper surface I have designated by three reference letters, namely, 205A, 205B and 205C. The carrying plate 200 is pivoted on a cross shaft 230 and is provided with a flange or catch 231 offset toward the right to co-operate with the latch 201. Pivoted at 233 on the plate 200 is the carrying pawl 234 and the carrying plate 200 is retracted to position by means of the spring 235. One end of the carrying plate 200 which I have designated 236 is for the purpoes of preventing over-rotation in carrying. The latch 201 is in the form of a roller and is mounted on an upwardly extending arm 237 pivoted at 238 and retracted to position by means of a spring 239. The upper end of the arm 237 which I have designated

Deposition of Defendant's Witness, Charles N. McFarland, stipulated in from Massachusetts case.

240 is a trip adapted to be moved by the cam on the numeral wheel.

Supposing the parts to be in the position shown in Figure 9 what has occured is as follows: The handle of the machine secured to the main shaft 100 has been swung toward the left and has moved the roller 223 out of the depression 205A and thus swung downward the arms 205 and the cross rods 208 until finally the cross rod has reached the lower end of the link 209 and pulled down the plate 200. The handle has reached the end of its stroke toward the left and has returned far enough on the reverse stroke to reach the parts 205B of the swinging arms 205. The catch 201 is engaged with the latch or flange 231 of the carrying lever 200, but the devices for moving the carrying lever or plate 200 into position for carrying are inactive by reason of the presence of the slots 209 and the links 210.

In order to more clearly illustrate the successive positions of the different parts I use two more figures, namely, Cut 2 and a new Cut 15. In Cut 2 the parts are shown

Cut 2.

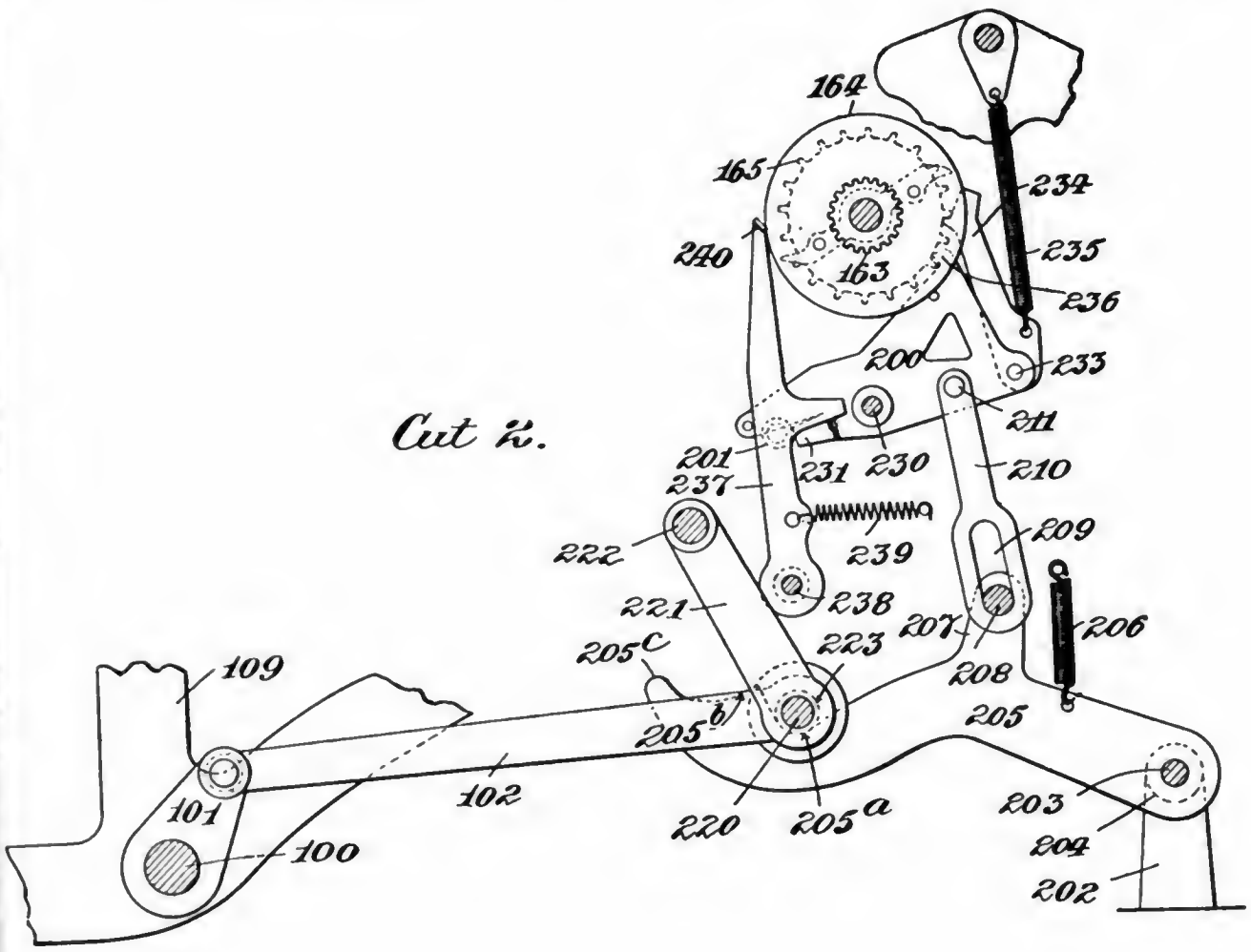

Deposition of Defendant's Witness, Charles N. McFarland, stipulated in from Massachusetts case.

in position just after a carrying operation has been completed and the machine stands in normal position and the main handle has not yet been actuated. In Cut 15 the

Cut 15.

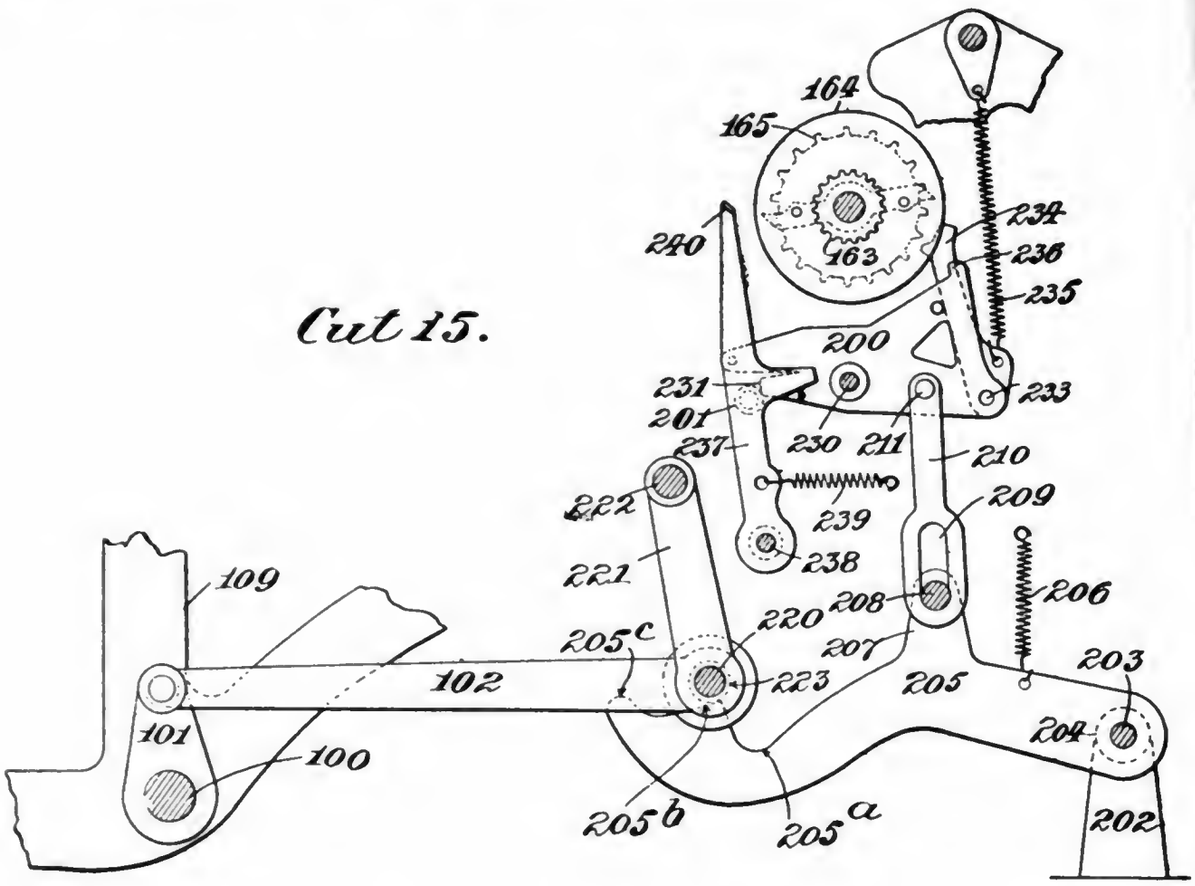

roller 223 has been moved out of the depression 205A up onto the surface 205B and the cross rod 208 is at the lowermost part of the slot 209 of the link 210. So arranged the carrying lever 200 and carrying pawl 234, are in position for carrying. A further movement of the handle of the machine moves the link 102 and the arms 221 and the rollers 223 to their furthermost position toward the front of the machine and to the left and will cause the carrying levers to be slightly further retracted away from the numeral wheel in order that the latches or roller 201 may be drawn under the flange 231 of the carrying lever so that they may be detained until a subsequent actuation of the numeral wheels of the machine necessitate another carrying operation.

It will thus be noted that the partial retraction did not take place immediately after the levers 200 were moved

Deposition of Defendant's Witness, Charles N. McFarland, stipulated in from Massachusetts case.

into position for carrying and no such retraction has taken place up to this point in the movement of the main handle of the machine which is now at its forwardmost position. Now if the handle which is connected to the shaft 100 be allowed to start on its way back to the normal position the partial retraction takes place allowing the arms 205 and the cross rod 208 to assume the positions relative to the links 210 which are connected to the levers 200 as shown in Figure 9. It will be noted that the carrying plate or lever on which the carrying pawl is mounted was moved into position for carrying immediately at the beginning of the stroke of the handle forward and that the partial retraction of the devices which thus moved the levers did not take place until the handle of the machine started on its backward stroke and had pursued its backward path to some slight extent. In the meantime it will also be seen the latch 201 under the influence of its spring 239 has engaged with the catch 231 on the end of the carrying plate 200 precisely in the same manner as the latch in the Felt machine engaged the catch on its carrying lever. That is, the partial retraction of the devices which moved the carrying plate and its pawl into position for carrying served to bring about a locking engagement between the catch 231 and latch 201, but has not "moved the levers to escape re-engagement with the latches" called for by the last clause of this claim 47. In other words, the movement of the elements in the Felt patent does not correspond to that clause of the language of the claim and neither does the movement of the parts in the defendant's machine.

In order to make out an analogy between the rocking frame N, the cam N6 and the connection between the cam and rocking frame of his own patent and the parts of the defendant's machine referred to by him, Mr. Felt made some statements concerning the rod 203 on which

Deposition of Defendant's Witness, Charles N. McFarland, stipulated in from Massachusetts case.

in position just after a carrying operation has been completed and the machine stands in normal position and the main handle has not yet been actuated. In Cut 15 the

Cut 15.

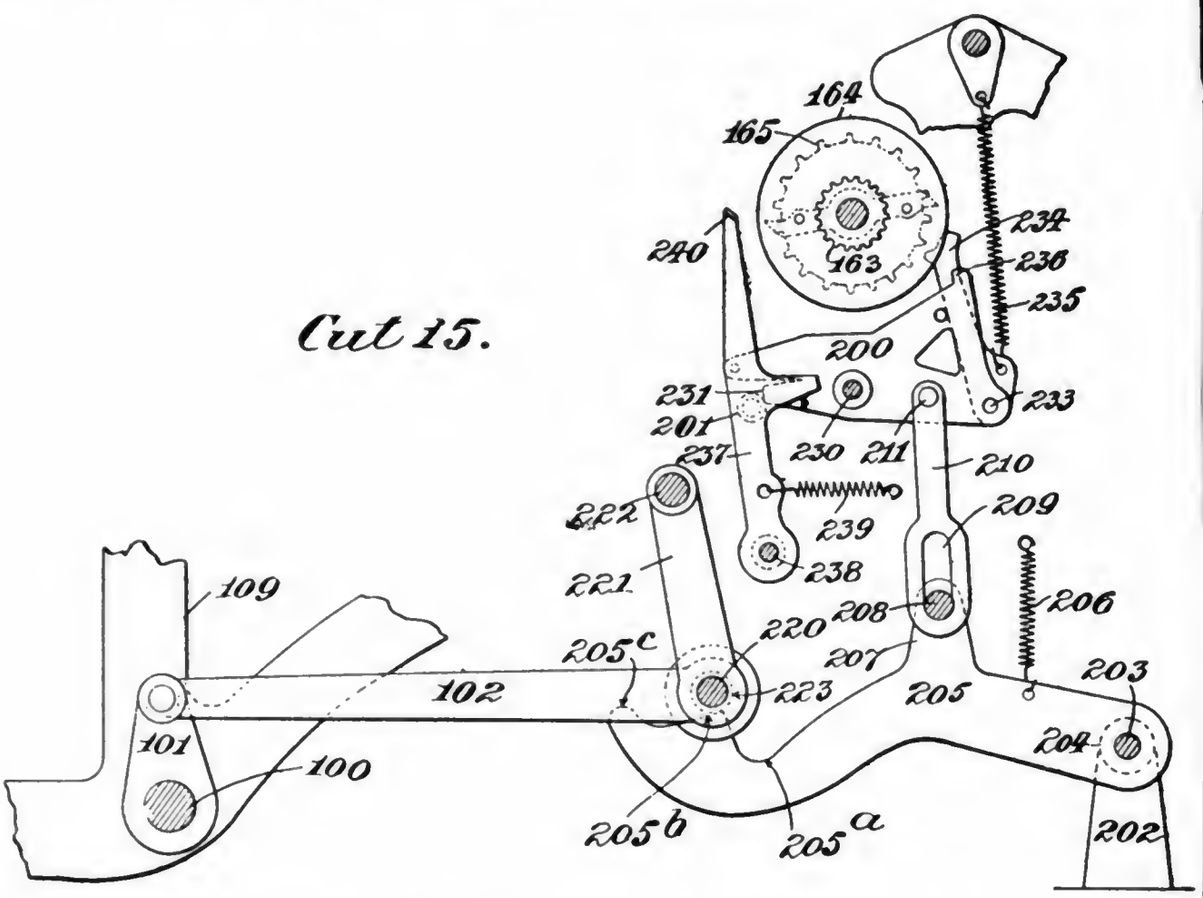

roller 223 has been moved out of the depression 205A up onto the surface 205B and the cross rod 208 is at the lowermost part of the slot 209 of the link 210. So arranged the carrying lever 200 and carrying pawl 234, are in position for carrying. A further movement of the handle of the machine moves the link 102 and the arms 221 and the rollers 223 to their furthermost position toward the front of the machine and to the left and will cause the carrying levers to be slightly further retracted away from the numeral wheel in order that the latches or roller 201 may be drawn under the flange 231 of the carrying lever so that they may be detained until a subsequent actuation of the numeral wheels of the machine necessitate another carrying operation.

It will thus be noted that the partial retraction did not take place immediately after the levers 200 were moved

Deposition of Defendant's Witness, Charles N. McFarland, stipulated in from Massachusetts case.

into position for carrying and no such retraction has taken place up to this point in the movement of the main handle of the machine which is now at its forwardmost position. Now if the handle which is connected to the shaft 100 be allowed to start on its way back to the normal position the partial retraction takes place allowing the arms 205 and the cross rod 208 to assume the positions relative to the links 210 which are connected to the levers 200 as shown in Figure 9. It will be noted that the carrying plate or lever on which the carrying pawl is mounted was moved into position for carrying immediately at the beginning of the stroke of the handle forward and that the partial retraction of the devices which thus moved the levers did not take place until the handle of the machine started on its backward stroke and had pursued its backward path to some slight extent. In the meantime it will also be seen the latch 201 under the influence of its spring 239 has engaged with the catch 231 on the end of the carrying plate 200 precisely in the same manner as the latch in the Felt machine engaged the catch on its carrying lever. That is, the partial retraction of the devices which moved the carrying plate and its pawl into position for carrying served to bring about a locking engagement between the catch 231 and latch 201, but has not "moved the levers to escape re-engagement with the latches" called for by the last clause of this claim 47. In other words, the movement of the elements in the Felt patent does not correspond to that clause of the language of the claim and neither does the movement of the parts in the defendant's machine.

In order to make out an analogy between the rocking frame N, the cam N6 and the connection between the cam and rocking frame of his own patent and the parts of the defendant's machine referred to by him, Mr. Felt made some statements concerning the rod 203 on which

Deposition of Defendant's Witness, Charles N. McFarland, stipulated in from Massachusetts case.

the swinging arms 205 are pivoted hardly borne out by the actual construction. He also used the arms 205 twice, once he called them a part of the rocking frame and then he called them a connection between the cams and the rocking frame, while the cams were only the top edges of these same arms. That is, Mr. Felt said that the same piece 205 was a frame and a cam and a connection between the frame and the cam. If the upper edges of these arms which I have called 205A, 205B and 205C are equivalent to the cams N6 of the Felt patent they should, in some manner, be connected with the main shaft of the machine, as the cams in the Felt devices are so connected. This, of course, is not the case in the defendant's machine.

There is no analogy on construction, mode of operation or proper designation of the mechanism between the two machines.

Q. 34. Do you find any embodiment of this claim 47 in any patent of the prior art?

A. I do. All of the elements of this claim are found in the patent to W. H. and W. W. Wythe, No. 445582, to which I have already referred.

In the Wythe patent the carrying levers and their latches are designated p2 for the carrying levers and r for their latches. The devices for moving the levers into position for carrying are the rock shaft P, the lever p, the cam N and the small cam or pawl n2 mounted thereon. These elements are constructed and operated so as to correspondent exactly to the similar elements of the Felt device.

These elements move just as do the elements in the Felt device and if the last clause of claim 47 accurately describes their movement in the Felt device it also accurately describes their movement in the Wythe device, because the devices which moves the levers into position

Deposition of Defendant's Witness, Charles N. McFarland, stipulated in from Massachusetts case.

for carrying are retracted partially to allow the levers to engage the latches and to escape therefrom when a subsequent carrying operation takes place. I find the elements of the claim in the Wythe machine with the same function and movable in the same way as in the Felt machine.

NEW YORK, January 3, 1908.

Present witness and counsel as before.

Q. 35. Do you agree with Mr. Felt that the elements of claim 48 of patent 568021 are found in defendant's machine?

A. I do not. This claim is identical with claim 47 except for the additional words as follows:

> "And a cam device for controlling the movement of such devices for moving the levers."

I have already explained that I do not find the elements of claim 47 in the defendant's machine. I have examined carefully Mr. Felt's testimony concerning claim 48 to see what part of defendant's machine he identifies with the new element of this claim 48 and find that it is the edges of the swinging arms 205 which he calls cams. His statement about the matter is found in the very last part of the paragraph next preceding his consideration of claim 49 of this same patent (lines 13 *et seq.*, on page 41).

He says that the

> "Devices for moving the levers into position for carrying, such devices being also retracted partially immediately after thus moving the levers to allow the levers released from the latches to escape re-engagement therewith"

are represented in defendant's machine by

> "the swinging frame and the loops and the cams above described and the cross rod carrying the rollers above mentioned"

looking through his testimony to find what he means by

Deposition of Defendant's Witness, Charles N. McFarland, stipulated in from Massachusetts case.

the expression "and the cams already above described" I find that he means the upper surfaces which I have called 205a, 205b and 205c of the swinging arms 205 which he says are so formed as to constitute a cam.

I find that in order to make out a case of identity between the language of the claim and the mechanism of defendant's machine he has used these upper surfaces of the swinging arms 205 first, to constitute an essential element of the "devices for moving the levers into position for carrying" and then has used the same element or edges to constitute the element "a cam device for controlling the movement of such devices for moving the levers." Referring to the claim the word "and" is inserted before the last element of the claim and it seems to me that if it is to be given any force it must mean that the cam device mentioned after the word and must be something additional to and not forming an essential part of the previous elements of the claim. As I do not find that there is any additional cam device in the defendant's machine and as I did not find that the elements of claim 47 were found in defendant's machine, my opinion is that the elements of this claim 48 are not found in the defendant's machine.

Q. 36. Do you find an embodiment of the elements of this claim in any patent in the prior art?

A. I do. As I explained in considering claim 47 all of its elements are in the machine described in the patent granted to W. H. & W. W. Wythe. The additional element called for by this claim, that is, "a cam device for controlling the movement of said devices for moving the levers" is also found in the Wythe machine and is represented by the cam N and the small cam or pawl n^2 mounted thereon. This cam N fulfilled exactly the same function as the cam C^{10} in the Felt patent and the small cam, or pawl n^2, performs exactly the same func-

Deposition of Defendant's Witness, Charles N. McFarland, stipulated in from Massachusetts case.

tion as the small cam N6 of the Felt patent, so that it represents accurately, whichever one of these elements can be called the controlling cam device of the claim. At line 26 of page 5 of the Wythe patent this small cam mounted on the large cam N is called by the reference character "n." This is a mistake. It should be "n^2" as clearly shown on Figure 6 of the drawings forming part of the patent. It is also seen to be an error from the fact that on page 4, line 72, of the same patent, the character "n" is correctly employed to designate the cam groove in the large cam N.

Q. 37. Will you explain the elements of claim 49 of patent No. 568021 as applied to the Felt machine?

A. This claim reads as follows:

> "The combination with the carrying levers and their latches, of the rock shaft N and its pin, and a cam for rocking said shaft in moving the carry levers, and also acting to allow it to rock back partially to give opportunity to the levers which may be released from their latches to move far enough to escape re-engagement, substantially as specified."

Mr. Felt said concerning the elements of this claim as embodied in his own machine

> "The carrying levers and their latches of the claim 49 are represented in the patent by the carrying levers B5 and the latches O5 already fully described in connection with the last two claims."
>
> "The rock shaft N and its pins of the claim 49 are the rock shaft and the pins O already described in connection with the last two claims as the rocking frame."

"The cam for rocking said shaft in moving the carrying levers and also acting to allow it to rock back partially to give opportunity to the levers which may be released from their latches to move far enough to escape re-engagement are the cam pieces N6 already fully described in reference to claim 48."

That is all that Mr. Felt has to say with reference to

Deposition of Defendant's Witness, Charles N. McFarland, stipulated in from Massachusetts case.

the elements of this claim as they are embodied in his own patent.

It will be noticed that there are the following elements in this claim:

1. The carrying levers.
2. Their latches.
3. The rock shaft N.
4. Its pins.
5. The cam for rocking said shaft in moving the carrying levers.

There is in addition to these elements a clause which describes the mode of motion or a function of this last mentioned element, namely:

> "And also acting to allow it to rock back partially to give opportunity to the levers which may be released from their latches to move far enough to escape re-engagement."

Concerning this last movement or mode of operation of the cam N6 referred to, it is to be noted that this cam does not move the rock shaft according to the statement of the claim, but *allows* it to rock back. Therefore, something else must move it and I find by reference to the patent at page 6, line 55, that this something is stated as

> "spring N5 attached to crank N4 acts constantly on the shaft N and returns it to its normal position during the upstroke of the hand lever C15."

Therefore, it seems to me that this claim does not express an operative combination because without the spring the rock shaft will not rock back partially, even it is allowed to do so through the action of the cam N6.

Q. 38. Do you find in defendant's machine the subject matter of claim 49 of the patent?

A. I do not. There is not to be found in the defendant's machine "a rock shaft N and its pins" and consequently there cannot be found any cam for rocking said

Deposition of Defendant's Witness, Charles N. McFarland, stipulated in from Massachusetts case.

shaft which does not exist or for acting to allow something which has no existence to rock back partially.

Mr. Felt finds in defendant's machine "the carrying levers and their latches" in the carrying plates No. 200 on the cuts which I have made of these parts of the defendant's machine and the latches 231 which have been frequently referred to.

He finds "the rock shaft N and its pins" represented by the arms 205 pivoted on the shaft 203 at the back of the machine and the series of looped links 210 which has also been frequently referred to. He finds "the cam for rocking the shaft" (although there is no shaft) in the upper edges 205a, 205b and 205c of the swinging arms 205 referred to. He says concerning this last element:

> "The cam for rocking said shaft, etc., is represented in defendant's machine by the extensions on the arms, the upper edges of which are used as cam surfaces to rock the swinging frame in unison as one member and as though it were one rigidly formed rock shaft."
>
> "The cam edges on the extensions of the two arms serve to give the swinging frame a movement precisely the same as it would have if the extension on one of the arms was cut off and the hub of the two arms pinned to the shaft on which they are pivoted."

That is, in effect, he says if the machine was made over again to really answer the terms of the description of the elements of the claim it would embody such elements; that is probably true but the machine has not been made over again and does not embody such element.

I am confirmed in my opinion that the elements of this claim are not found in defendant's machine by the action of the complainant's in this case with respect to claim 46 of this patent. I am informed by defendant's counsel that claim 46 of this patent was one of the claims sued on. I was present at the taking of testimony in Chicago

Deposition of Defendant's Witness, Charles N. McFarland, stipulated in from Massachusetts case.

on behalf of the complainant and I heard Mr. Clarke, complainant's counsel, instruct Mr. Felt during his testimony to omit all reference to claim 46 and I further heard him instruct the stenographer to strike out claim 46 from the question asked of Mr. Felt in order to bring out the similarity between the two machines involved herein.

Claim 46 reads as follows:

> "The combination with the carrying levers and their latches, of the shaft N and its pin for moving said levers, and means for rocking said shaft substantially as specified."

Mr. Clarke said that the reason why this claim was dropped out of consideration was that it was a detailed claim not found in the defendant's machine.

I agree with him in that conclusion, because there is no shaft N in defendant's machine and no pins resembling the pins of the claim and as there is no shaft there is no need for rocking said shaft.

If the elements of claim 46 were not to be found in defendant's machine when that claim was under consideration, I do not see how the same elements can be found in defendant's machine when they are set out in claim 49 when that claim is under consideration, the elements being precisely the same except that the element "and means for rocking said shaft" found in claim 46 is specifically mentioned in claim 49 as a cam for rocking said shaft in moving the carrying levers, etc.

Q. 39. Do you find the elements of claim 49 of the patent 568021 in any patent of the prior art?

A. I do. They are present in the Wythe patent referred to No. 445582.

I have already explained that the "carrying levers of the claim are the levers p2 of the Wythe patent and "their latches" are the latches *r* of that patent.

Deposition of Defendant's Witness, Charles N. McFarland, stipulated in from Massachusetts case.

"The rock shaft N" of the claim is the rock shaft P of the Wythe patent and "its pin" of the claim is the bent arm p5 of the Wythe patent.

"The cam for rocking said shaft in moving the levers and also acting to allow it to rock back and partially to give opportunity to the levers which may be released from their latches to move far enough to escape re-engagement" is the cam N and the subordinate cam n2 mounted thereon of the patent.

The functions of the elements of the Wythe patent referred to are precisely the same as the functions of the corresponding elements of the Felt patent, although the construction is slightly different.

Q. 40. Please explain claim 52 of patent 568021.

A. This claim reads as follows:

> "In a calculating machine, the combination of the numeral wheels, the carrying levers, a rock shaft controlling said levers, and a hand device or lever whereby said shaft is rocked, substantially as specified."

It is obvious that the numeral wheels and the carrying levers are the same as have heretofore been mentioned and that the rock shaft controlling the levers is the rock shaft which has also been mentioned. Mr. Felt says that the elements "a hand device or lever whereby said shaft is rocked" is the main operative lever of the machine described as C15 in his patent.

It does not seem to me that he has correctly identified this element of the claim. The main operating lever of the machine C15 does not rock the shaft N except in a very indirect and round about way. As Mr. Felt himself says this lever C15 is fastened to a big cam C10 which vibrates on the stud C11 and the big cam has on it a cam piece N6 which acts against a dolly roll N8 on the end of an elbow lever N2 which is connected to long link N3

Deposition of Defendant's Witness, Charles N. McFarland, stipulated in from Massachusetts case.

fastened to another lever N4 which actually does move the rock shaft N.

It is obvious by the mere inspection of this train of mechanism which is shown in Figure 3 of the patent that the hand device or lever which is adapted to fit the stud C11 on the cam C10 does not rock the shaft N. Moreover if this is the hand device of lever of the claim then the claim expresses an inoperative combination, because it omits all of the intermediate mechanism whereby this rocking motion is transmitted. For instance supposing that anyone of the six elements C10, N6, N8, N2, N3, or N4, are omitted and the main lever C15 is actuated the rock shaft N would not move, so that it requires the insertion of six distinct elements between the hand device and the rock shaft in order to constitute an operative mechanism.

In examining Figure 3 of the patent I find that the lever N4 is shown as provided with a finger piece or handle which during Mr. Felt's examination was marked N^x. It seems evident to me that it is this lever N4 with the finger piece N^x which constitutes the last element of this claim 52. If this lever N4 is moved it does rock the shaft N and it is "a hand device or lever" eminently well adapted for that purpose. If it is not the hand device or lever of this claim it seems odd that it should be shown so well in the drawing and be so well adapted for such useful purpose, namely, to rock the shaft N and pins O in the operation of resetting the numeral wheels to zero. This hand lever N^x is clearly seen in Figure 1 of the patent extending outside the casing of the machine in a very convenient position to be actuated by the hand of the operator.

I have procured a Comptograph machine numbered 1624 on the front plate of the machine and also on the main plate which embodies the device illustrated in the

Deposition of Defendant's Witness, Charles N. McFarland, stipulated in from Massachusetts case.

patent and I find that the lever N^x on the machine and adapted for the purpose stated. I have identified it by attaching a tag to it.

Q. 41. Do you agree with Mr. Felt in his opinion that the subject matter of claim 52 of the patent 568021 is found in defendant's machine?

A. I do not, for the reason that there is no rock shaft controlling the carrying plates in defendant's machine and consequently no hand device or lever whereby such supposititious shaft is rocked.

Mr. Felt, in his testimony, re-asserts with reference to this claim that the rock shaft of the claim is found in the swinging arms 205, cross rods 208, linked loops 210 and cam surfaces 205a, 205b, 205c, of the arms 205 which collectively he calls the rocking frame. I have already shown that the expression "rock shaft" cannot aptly be applied to this combination of elements in defendant's machine and I will not reiterate that statement.

He finds the hand device or lever of claim 52 in the main operating lever of the defendant's machine. In this he is obviously in error, the main operating lever of defendant's machine does not rock even the combination of elements which he calls a rocking frame. It merely moves the main shaft of the machine and there are a number of pieces of intermediate mechanism between this shaft and the swinging arms 205 which serves to modify their movement. There is in defendant's machine no device or lever which is within reach of the hand of the operator by which the carrying levers may be moved or controlled.

Q. 42. Do you find the elements of the claim 52 of the patent 568021 in any patent of the prior art?

A. I do not. In the Wythe patent to which I have previously referred I find "the numeral wheel," "the carrying levers" and "a rock shaft controlling said levers."

Deposition of Defendant's Witness, Charles N. McFarland, stipulated in from Massachusetts case.

The numeral wheels are called F, the carrying levers are called p2, and the rock shaft is called P. There is no "hand device or lever whereby said shaft is rocked," unless it is found in the drawer of the apparatus. When this drawer is pushed inward, or closed, it moves a larger bell crank lever M3, which in turn oscillates connecting rods m3 and m4 and vibrates the shaft F^1 upon which the large cam N is mounted and this rocks the shaft P which is the rock shaft above referred to.

I would hardly call the draw a hand device for rocking this shaft P, but if Mr. Felt finds such hand device in his own machine in the main handle of the machine and such hand device in the defendant's machine in the main handle of that machine, each hand device being separated from its rocked element by a long train of intermediate mechanism then Mr. Felt would be compelled to find that the draw of the Wythe patent was a hand device answering the term of the claim just as well as the main handle of his machine answered it.

Q. 43. Do you agree with Mr. Felt that there exists in defendant's machine the elements of claim 1 of patent 628176?

A. I do. This claim reads as follows:

> "The combination with the printing mechanism adapted to print two or more characters side by side, of laterally—moveable paper-carriage, devices for feeding the paper longitudinally mounted in said carriage, and automatic mechanism acting in any position of the carriage to actuate said feeding devices in the line spacing movement, substantially as specified."

Mr. Felt has correctly identified the mechanism of the claim in defendant's machine.

Q. 44. Do you agree with Mr. Felt that the elements of claim 2 of the patent 628176 exists in defendant's machine?

A. No I do not. This claim reads as follows:

Deposition of Defendant's Witness, Charles N. McFarland, stipulated in from Massachusetts case.

"The combination with a series of type arranged to print side by side, devices for impressing the paper upon the type, a laterally-moveable paper-carriage adapted to position the paper for the different columns, feed rolls for moving the paper longitudinally past the type, and means for actuating said roll, substantially as specified."

Defendant's machine contains the elements of this claim except the second one, namely "devices for impressing the paper upon the type." In defendant's machine the recording devices comprise movable types which are propelled forward to strike a properly placed inking ribbon and move it sharply against a platen on which the paper is place. It is precisely the same action as occurs in an ordinary typewriter.

In Mr. Felt's machine the devices for recording the items do impress the paper upon the type. His types are mounted upon a series of disks or segments terminating in circular arcs along which are arranged the projecting types which are not movable with respect to their disks. These disks are brought to position by appropriate mechanism in the machine and after the disks carrying the type numbers corresponding to any number enumerated are arranged at the line of print, hammers are caused to be actuated which smartly propel the paper against an inking ribbon and against the type. In patent No. 568021 Mr. Felt states that it is not even necessary to use a platen to soften the blow against the paper in his machine. It can readily be understood that if a platen of some kind is not used the paper would probably be punched full of holes and in the patent under consideration he shows a platen interposed between the type hammers and the paper.

Q. 45. Do you agree with Mr. Felt that the elements of claim 4 of the patent 628176 exist in defendant's machine?

A. I do. This claim reads as follows:

Deposition of Defendant's Witness, Charles N. McFarland. stipulated in from Massachusetts case.

"The tabulating machine having in combination a laterally—moveable paper-carriage, means for feeding the paper vertically in any position of the carriage, and mechanism for shifting the carriage laterally the width of a column-space, substantially as specified."

Mr. Felt has correctly identified the mechanism of this claim in the defendant's machine.

Q. 46. Do you find in the prior art the elements of claims 1, 2 and 4 of the patent 628176?

A. I do. The elements of these claims are found in the combination of the machine disclosed in Mr. Felt's prior patent, especially 465255 and 568021, and the ordinary carriage of the Remington typewriter.

In the Felt machine described in the prior patent there is to be found:

1. A printing mechanism adapted to print two or more characters side by side.
2. Devices for feeding the paper longitudinally mounted in said carriage.
3. Automatic mechanism acting to actuate said feeding devices in the line spacing movements.

In the ordinary Remington typewriter there was to be found for many years prior to the time when Mr. Felt applied for a patent on the device which is the subject matter of these claims.

4. A laterally moveable paper carriage, and
5. Mechanism for shifting the carriage laterally.

In the typewriter the laterally moveable paper carriage was shifted laterally by means of an escapement which moved every time a letter or figure was struck on the keys so as to bring the paper to position to receive the next character or letter.

In a calculating machine the desirable thing to be done is to shift the carriage laterally a greater width than this or a width equal to the space taken up by the largest number of figures or characters in any particular part

Deposition of Defendant's Witness, Charles N. McFarland, stipulated in from Massachusetts case.

of the column printed upon the paper, so that the problem which was presented to Mr. Felt, or any other manufacturer of an adding machine, to convert the narrow paper carriage into a wide paper carriage laterally moveable was to take the laterally movable paper carriage of the typewriter and to lengthen out the distance through which its escapement would act so as to increase that distance from the space between the two figures to a space between several figures. The line spacing movements of the paper carriage were already to be found in the prior Felt devices. They were automatically operated and did not need to be changed in order to cooperate with a wider carriage.

In my opinion the subject matter of these claims is found embodied in the typewriter carriage referred to combined with Mr. Felt's prior machine in such manner that each of the elements going to make up the claim perform precisely the same functions which they performed in the prior relation in which they were used, and the only change necessary in any of the mechanisms employed to accomodate such combination of elements to the purpose of the adding machine was to merely change the length of the escapement on the typewriter carriage and widen the range of contact of the driving mechanism for line spacing to accomodate such operation in any position of the carriage.

I am familiar with the fact that at the time of the application for a patent by Mr. Felt on this device the predecessor of the Burroughs Company had a narrow carriage adding and printing machine which it had converted into a wide carriage adding and printing machine, answering all of the terms of this claim. This is described in patent is No. 595864 which was issued December 21, 1897, to Mr. Pike.

When the company with which I am now connected

Deposition of Defendant's Witness, Charles N. McFarland, stipulated in from Massachusetts case.

desired to convert their narrow carriage machine into a wide carriage machine it required merely the changes which I have indicated to accomplish this result. The same thing occurred with the Burroughs Machine, showing to my mind that the change was both obvious and within the range of ordinary mechanical skill.

Dated January 4, 1908.

Met pursuant to adjournment.

Present: Witness and Counsel as before.

A laterally moveable paper carriage and mechanism for shifting the carriage laterally are found fully described in the following patents to Brown, No. 465451; Garrett, No. 401780; McCormack, 439544; Reason, 439847; and Sears, 524867. All of these patents disclose typewriting machines of the ordinary typewriter pattern so far as these particular elements are concerned. The same elements are found in a music writing machine shown in the Bowen patent, No. 500793, which, while it does not provide for writing figures, provides for writing musical characters and in parallel columns.

The Daugherty patent No. 517735 also shows a broad laterally movable carriage. If the mechanism of any one of these typewriter devices was used in connection with the printing mechanism of the Felt machine with its devices for feeding the paper longitudinally mounted in the narrow carriage of the machine, the result would be the combination of the elements in any one of the claims 1, 2 and 4.

The patent to Pike to which I have above referred shows precisely the combination of the Felt patent 628176 so far as the claims are concerned and the same is true of patent to Hiett 580853. I will not go into details of the mechanisms of these different machines because I do not think that my statements in regard to them can be substantially disputed.

Deposition of Defendant's Witness, Charles N. McFarland, stipulated in from Massachusetts case.

The Burroughs patent No. 388179 discloses the first three elements claims 1, 2 and 4 of the Felt patents 565255 and 568021 and uniting these elements in the Burroughs patent with the wide and laterally movable carriages of the typewriters referred to we would again have the combination of these claims 1, 2 and 4.

Q. Have you read and do you understand Mr. Felt's patent No. 661121?

A. I have read it and believe I understand it.

Q. Do you agree with him that the subject matter of claims 37, 38, 39 and 40 is to be found in defendant's machine?

A. I do in part as follows: These claims read as follows:

> "37. The calculating machine, having type and hammers for impressing the paper against the type, said hammers having hinged heads, made separate from the bodies, actuating springs attached to the heads, and means for arresting the heads before the hammers can make the impressions, substantially as specified.
>
> 38. In a machine for printing numbers, the combination with the type, of swinging hammers having their heads made separate from their bodies, springs attached to the heads and through them actuating the bodies, and means for arresting the heads before the making of the impressions, substantially as specified.
>
> 39. In a machine for printing numbers, the combination with the type, of swinging hammers composed of hinged heads, and hinged bodies, the actuating springs being attached to the heads and the heads adapted to actuate the bodies, and means for arresting the heads before the completion of the stroke, substantially as specified.
>
> 40. In a machine for printing numbers, a printing-hammer made in two parts and hinged together, one part receiving the actuating power and imparting it to the other, and being itself arrested before the making of the impression, substantially as specified."

Deposition of Defendant's Witness, Charles N. McFarland, stipulated in from Massachusetts case.

The construction of the machine of this Felt patent is such that the hammers used in printing are composed of two parts, the part which Mr. Felt calls the head, and which is moved by an actuating spring, and the part which he calls the body, which is hinged to the head and which under the impulse of the spring is propelled forward to strike the paper against the type. A stop is employed to arrest the movement of the head before the body of the device has reached the full end of its stroke so that the body continues to move after the head has been brought to rest. Corresponding parts in the defendant's machine are very differently constructed and operate very differently from those of the machine in the patent. In the defendant's machine the types are moveable and are positioned in front of the paper, the scheme of the construction being to propel the types forward to strike against the paper. This is just the opposite of the scheme of the Felt patent in which the paper is propelled against the type which is held stationary for that purpose. Referring to cuts 4 and 5 in the defendant's machine, intermediate the type 601 and the hammers 610 are little devices 620 which I call plungers and which are automatically retracted to position after being actuated, these plungers serve to receive the blow from the hammers and to transmit it to the type. So that in defendant's machine actually the hammers do not come into contact with the type and cannot do so. The hammers, therefore, do not make any "impression" or serve to make any impression at all on the paper. They do not come in contact with the paper 602 and there are two elements interposed between them and the paper, namely, the type 610 and the plungers 620 mentioned.

So far as the mere construction of the hammers themselves is concerned they resemble somewhat the hammers of the Felt device. Adopting the names which Mr.

Deposition of Defendant's Witness, Charles N. McFarland, stipulated in from Massachusetts case.

Felt gives to these different parts of the hammers which I believe to be wrong because he called the head of the hammer the body, and the body the head, the bodies of the hammers in the defendant's machine are composed of small links or members, 614, each provided with a slot 616 adapted to reciprocate with respect to a stop rod 617 common to all of the hammers across the machine, each head 614 being provided with an actuating spring 615. When any head 614 reaches its stop rod 617 it can move no further under the impulse of its spring. To each head there is hinged a body 610 and when the actuating springs are permitted to act upon the combined device, the head and body moves together, until the head 614 is brought to a stop by coming in contact with the rod 617 to which I have referred, while the body 610 continues to move forward and strikes against its plunger 620, which in turn is moved against the type 620 to propel it against the paper.

Referring first to claim 40, which seems to be the broadest of these four claims, I agree with Mr. Felt that the subject matter of his claim is contained in defendant's machine, unless the expression "being itself arrested for the making of the impression" should compel an interpretation of the claim which would include a hammer strictly limited to one making an impression of the paper against the type. If such is the case, then this construction does not exist in the defendant's machine and the elements of the claim do not exist therein. For reasons which I will hereafter state I am of the opinion that if the claim 40 is to be held not anticipated such interpretation will have to be given to it.

Concerning claim 39, I agree with Mr. Felt that the elements of the claim are found in the defendant's machine unless the expression "the combination with the type" should compel such a construction of this claim

Deposition of Defendant's Witness, Charles N. McFarland, stipulated in from Massachusetts case.

as require that a *direct impact* between the hammers and the type. If this interpretation is given to the claim then the elements composing it are not found in the defendant's machine.

Concerning claim 38, I agree with Mr. Felt that the elements of the claim are found in the defendant's machine unless the expression "the combination with the type" and "the making of the impressions" should compel a narrow interpretation of the claim such as I have mentioned. If this interpretation is given to the claim the elements are not to be found in the defendant's machine.

Concerning claim 37, I do not agree with Mr. Felt because there is not to be found in the defendant's machine the element "hammers for impressing the paper against the type" as I have stated.

Q. Do you find in the prior art the elements of these four claims or any of them?

A. I do, unless the claims are given such a narrow interpretation that they are confined to the exact structure shown in the Felt device, in which case it may be said that the elements do not exist in the prior patents which I am about to mention.

In the patent of Frank B. Rae, No. 423392, issued March 11, 1890, I find a car gong designed to be operated by the foot of the motorman and placed underneath the platform of the car which embodies the element of claim 40, and the element of the other claims providing the type are omitted. It comprises a hammer made in two parts corresponding to the body and separate head of the claims and these parts are hinged together, and when the actuating power is brought to bear against the head both the parts move together until such head is arrested by being brought into contact with the stop. In this case however the power is not a spring, but the foot of the

Deposition of Defendant's Witness, Charles N. McFarland, stipulated in from Massachusetts case.

motorman, but the combination of elements is precisely the same.

In the patent to Charles H. White, No. 271176 issued January 23, 1883, I find a two part hammer with the parts hinged together, means for actuating the separate head and a stop to arrest the movement of the head at a predetermined point and to permit the body to continue and to complete the stroke. This is also a gong and the body of the hammer is actuated by a cord. Except for the absence of the type and the actuating spring the device is the same as is shown in the Felt patent.

In the patent to Alfred B. Tanner, No. 179493, issued July 4, 1876, I find the elements of the claims, with the exception of type. In this case the hammer head is actuated by a spring just as in the Felt patent.

In the patent to E. S. Bloomfield, Jr., No. 337657, issued March 9, 1886, I find the elements of the Felt claims with the exception of the type. In this case the means for actuating the head of the hammer is a spring just as in the Felt patent.

I might add that a two part hammer of this kind in which the head is arrested in its movement before the body is an old and well known device in other arts, for instance in gun locks.

In view of the fact that in Mr. Felt's prior patents embodying a printing section, substantially the same combination of parts is shown as is shown in this patent with the exception that the hammer is made in one piece and not in two, it seems to me that it was a mere substitution of mechanical elements to take the two part hammer from these gong bells and other devices shown in these prior patents and substitute it for the single piece hammer which he had used before.

Counsel for defendant offers in evidence the following letters patent which have been referred to by the witness in the course of his testimony, viz:

Deposition of Defendant's Witness, Charles N. McFarland, stipulated in from Massachusetts case.

Felt No. 371496.
Felt No. 441232.
Bergmann No. 171714.
Schweitzer No. 202057.
Smith No. 414335.
Patterson No. 423948.
Lusuarde No. 426029.
Rector No. 434201.
Davis No. 228448.
Wythe No. 445582.
Richson No. 466836.
Craig No. 434251.
Weiss No. 496240.
Weiss No. 443024.
Burroughs No. 504963.
McCaskey No. 616132.
McFarland No. 874107.
Pike No. 595864.
Brown 465451.
Garrett 401780.
McCormack No. 439544.
Reason 439847.
Sears No. 524867.
Bowen No. 500793.
Daugherty No. 517735.
Burroughs No. 388179.
Rae No. 423392.
White No. 271176.
Tanner No. 179493.
Broomfield No. 337657.

Counsel for complainant objects to the offer of the following patents, and to all reference thereto by the witness, on the ground that they are not set forth in the defendant's answer, viz.:

Wythe No. 445582; Richson No. 466836, Craig No. 434251, Weiss No. 443024 and 496240, and McCaskey No. 616132.

Counsel for defendant offers in evidence the several cuts referred to by the witness and numbered from 1 to 15, and asks that the same be marked according to their respective numbers.

Counsel for defendant offers in evidence the Comptograph machine No. 1624 referred to by the

witness and asks that the same be marked Defendant's Exhibit Comptograph Machine.

Deposition of Defendant's Witness, Charles N. McFarland, stipulated in from Massachusetts case.

Direct Examination Closed.

Cross-Examination by Mr. Clarke.

Met pursuant to adjournment January 6, 1908.

Present parties as before.

X-Q. 49. When did you enter the employ of the American Arithmometer Company?

A. It was, as well as I can remember, during the summer of 1899.

X-Q. 50. Prior to that time had you any familiarity with adding machine mechanism?

A. I had not, except in a superficial way and, as I stated before, my knowledge and experience in the adding machine art had been acquired since that time.

X-Q. 51. Prior to that time what did you know of adding machine mechanism even in a superficial way?

A. I knew of the existence of machines which are considered to belong to this art—I knew of the existence of the well known Burroughs Adding Machine—I knew of the existence of fare registers and counting machines of a variety of forms.

X-Q. 52. Had you ever examined any adding machines at that time?

A. I had. I had made drawings of fare registers—I had also closely examined the structure of the before named Burroughs Adding Machine.

X-Q. 53. When did you first examine the Burroughs Adding Machine?

A. I do not remember but it was prior to my going into the employ of The American Arithmometer Company.

X-Q. 54. How long prior, to the best of your recollection?

Deposition of Defendant's Witness, Charles N. McFarland, stipulated in from Massachusetts case.

A. To the best of my recollection the first Burroughs Adding Machine which I examined before entering the employ of the American Arithmometer Company was about the winter of 1893-94.

X-Q. 55. When thereafter did you next examine any other Burroughs Adding Machine?

A. I examined them from time to time not very closely, however, until I began to consider going into the employ of the company which built them.

X-Q. 56. When did you begin to consider going into the employ of the said company?

A. To the best of my recollection it was in the spring before I went to work for them in the summer.

X-Q. 57. Prior to that time the spring of 1899 for what purpose and to what extent did you, as you say, make some superficial examination of any Burroughs Adding Machines?

A. The object of those examinations were only those of a mechanic and designer who was interested in the development of intricate machinery of any sort; the extent of these examinations, as I stated before, were usually superficial and only sufficient to give a general idea of the mechanical principles followed out in the construction of the machine.

X-Q. 58. Where did you see these Burroughs machines that you say you looked at prior to the spring of '99?

A. I saw the first ones in the shops of the Boyer Machine Co., on Dixon street in the City of St. Louis, some of them later in the department of the same shop operated by the American Arithmometer Company. I also saw some of their machines in the factory of the American Arithmometer Company at Twenty-first and Wash streets, in the same city.

X-Q. 59. For what purpose did you visit these shops at the several times you have mentioned?

Deposition of Defendant's Witness, Charles N. McFarland, stipulated in from Massachusetts case.

A. For various purposes. I believe that the first call which I made at the shops of the Boyer Machine Company was on the invitation of my brother, W. H. McFarland, who was then in the employ of either the Boyer Machine Company or the American Arithmometer Company, I am not certain which, at the present time. I afterwards called on the Boyer Machine Company on business connected with the institution where I was employed several times in the course of time during the stay of the American Arithmometer Company at the Dixon street shop I called merely to see my brother and incidentally examine the machines. Afterwards when the American Arithmometer Company moved to the Twenty-first street factory I had business with the Boyer Machine Company on the first floor of the same building and sometimes visited the factory upstairs. I was also afterwards employed as a designer during the summer months and odd times which I had at my disposal by the Boyer Machine Company and as we were working upon a new set of tools and fixtures with which to build the Burroughs Adding Machine in England, my work frequently took me upstairs into the factory of the American Arithmometer Company. It was during these visits that the examinations which I have mentioned took place.

X-Q. 60. What was the designing work which you say you were doing for the Boyer Machine Company, and when?

A. I was employed on various work of this kind—I believe that the first work which I did for them was upon the tools and fixtures before mentioned by me, and while I am not certain as to the exact date when I began this work, I believe that it was during the summer two years prior to my entering the employ of the American Arithmometer Company. I did work for the Boyer Machine Company of this kind during the following two summers. This work consisted of making drawings and

Deposition of Defendant's Witness, Charles N. McFarland, stipulated in from Massachusetts case.

designing various automatic tools and fixtures for the manufacture of the product of the Boyer Machine Company, which was chiefly in the line of pneumatic tools.

X-Q. 61. Did you design any tools or fixtures for the manufacture of the Burroughs Adding Machine prior to the time you entered the employ of the American Arithmometer Company?

A. I did.

X-Q. 62. When, and for whom?

A. As stated before by me, about two years prior to my entering the employing the American Arithmometer Co. and the work was done for the Boyer Machine Company, who were building the tools.

X-Q. 63. What tools did you design?

A. I do not remember just what the tools were—I worked on a great many small tools and it has been quite a while and I could not recall any considerable number of them. The tools were not confined to the parts in any particular portion of the machine—there were a number of draftsmen at work and the work was given to them in such a way that they did work on tools for parts in the machine widely separated. My work was largely on bending and drill fixtures, for different parts of the machine.

X-Q. 64. And what were those parts so far as you remember, if you do remember any of them?

A. I would not attempt to recall any considerable number of them. Just now I happen to think of one fixture for putting all the bends in the part in the Burroughs machine No. 270, whose function was to stop the racks in the correct position for accumulation and to stop the type bar in the right place for printing the figure. Another one which I happen to think of just now is the fixture which puts the initial bend in the small wire rings which are used in the keyboard of that machine. I

Deposition of Defendant's Witness, Charles N. McFarland, stipulated in from Massachusetts case.

haven't thought of these fixtures for a long while and do not presently recall any of the tools which I worked upon.

X-Q. 65. On direct examination you testified that you were the joint inventor with Mr. Charles Wales of certain features of the carrying mechanism of the defendant's machine known as the Wales Adding Machine, will you please explain more particularly what these features were and when you devised them. You may for convenience refer to any of the cuts that you have put in evidence that may illustrate the mechanism.

A. Referring to cuts 14, 15 and 2, the particular part which I referred to in my testimony as having been invented by me is the part marked No. 236, which forms a part of the carrying plate or lever 200. I had something to do with getting out some of the other parts, but they do not prevent overrotation in carrying. I have previously described how the springs 235 are charged with energy to actuate the carrying levers in the process of carrying from a lower to a higher numeral wheel, and also how the arm 237 is moved out of contact with the point 231 of the carrying lever by the cams on the numeral wheel causing the spring 235 to draw the carrying lever, or plate, 200 through the medium of its connection with the carrying pawl 234 toward and in contact with the numeral wheel. It will be noted, by reference to cuts 14 and 15, that when the carrying levers are swung upon their pivots 230 toward the numeral wheel that the spur on the carrying pawl 234, which contacts with the teeth 165 of the numeral wheel are first to engage the numeral wheel; this is because of the position of the carrying pawl 234 above the rest of the carrying mechanism. After this spur has engaged the teeth 165 of the numeral wheel and the spring 235 continues to pull the pawl 234 and lever 200 upward the point 236 of the carrying lever comes in contact with a lower tooth

Deposition of Defendant's Witness, Charles N. McFarland, stipulated in from Massachusetts case

on the numeral wheel and occupies the position shown in cut No. 2. This effectively stops the numeral wheel from overrotation during the carrying.

X-Q. 66. Other than Mr. Felt's own comptometer and comptograph, do you know that there were prior to 1890 any adding machines having a multiple-order keyboard that were then actually capable of practical use for performing adding operations?

A. I do not understand the question. That is, I do not understand what is meant by a multiple-order keyboard.

X-Q. 67. I mean a keyboard containing separate rows of keys for the digits in each of the several denominations, units, tens, hundreds, thousands, etc.

A. No, I do not.

X-Q. 68. What is the general distinction, in respect to the moving of the numeral wheels, between a multiple-order keyboard adding machine and a counting or adding machine having a key or keys for only the numeral wheel of lowest or units order?

A. The general distinction, I should say, is first, that in the multiple-order keyboard machine, where the machine is key actuated, that all of the numeral wheels may be moved manually by depressing the keys corresponding to any order in which it may be desired to accumulate an amount, whereas in the counting machine only the wheel of lowest order can be so actuated. The foregoing is, of course, in reference to the rotation of the numeral wheels not due to carrying. The general distinction in respect to moving the numeral wheels in the operation of carrying between the multiple-order keyboard machine and the counting machine (that is, where only the wheel of lowest order is manually actuated) is in the nature or construction of the carrying device. There being two classes of multiple-order keyboard machines, the

Deposition of Defendant's Witness, Charles N. McFarland, stipulated in from Massachusetts case.

key driven and the key set machine, it is found that a different construction of carrying device is required in each of these cases.

X-Q. 69. Whether it be key driven or key set, in a multiple-order keyboard adding machine each of the series of numeral wheels corresponding to the several orders of keys must have its own independently movable actuating mechanism, as well as its carrying mechanism, while in a mere counting machine all of the series of numeral wheels of higher order than the units wheel are moved only by their respective carrying mechanisms, is this correct?

A. This is true, except with respect to canceling operations.

X-Q. 70. In the defendant's multiple-order adding machine what is the independently movable actuating mechanism for each of the series of numeral wheels apart from the carrying mechanism?

A. The rack bars No. 160 in cut 1 of the drawings I have made.

X-Q. 71. And there is also a series of separate carrying devices for these numeral wheels, so that each may independently respond to an impulse from either such carrying device or such rack-bar actuating mechanism 160 accordingly as either a ten is to be carried from the wheel of next lower order or a digit determined by a key in its own order is to be accumulated by the given numeral wheel?

A. Yes, there is a series of separate carrying devices for each of the numeral wheels in the defendant's machine, any one of which carrying devices can independently give an impulse to the wheel of higher order. And the separate rack bars 160, so far as they are immediately concerned, may rotate their numeral wheels through the medium of the other connections of the actuating

Deposition of Defendant's Witness, Charles N. McFarland, stipulated in from Massachusetts case.

mechanism whenever a key has been depressed in the series represented by such rack bar and the main handle of the machine has been drawn forward and then allowed to return to its normal position.

X-Q. 72. Each of these separate carrying devices is provided with an actuating spring?

A. It is.

X-Q. 73. And when keys are set in each of several different orders, in setting up a given multiple-order item on the machine, do the several rack bars 160 of the corresponding orders move and actuate their corresponding numeral wheels simultaneously, upon subsequently pulling the hand lever of the machine?

A. The rack bars are simultaneously moved to rotate the numeral wheels to accumulate the items set up on the keyboard only after the main handle of the machine has been pulled forward and released to return to its normal position; that is, the actuation of the numeral wheel takes place on the backward stroke of the machine.

X-Q. 74. And the said several rack bars so move and actuate their respective numeral wheels simultaneously?

A. They do.

X-Q. 75. And if such accumulation of digits on the said numeral wheels so moved or actuated necessitates carrying operations to or from the said numeral wheels, is the action of the proper carrying devices detained until after the aforesaid actuation of the numeral wheels by their respective rack bars?

A. It is.

X-Q. 76. What mechanism detains said carrying devices in their said action until after the aforesaid actuation of the numeral wheels by their respective rack bars?

A. Referring to cuts 2, 14 and 15 I will state that at

Deposition of Defendant's Witness, Charles N. McFarland, stipulated in from Massachusetts case.

the proper time for indicating a carrying operation by the numeral wheel in its rotation a cam on the number wheel impinges against the top of the arm 237 at the point 240, thus moving it away from the numeral wheel, allowing the latch roll 201 to move from under the projection 231 on the carrying lever 200, thus setting the carrying mechanism for a carrying operation. This carrying operation is deferred until after the rotation of the numeral wheel, due to accumulation, that is, the movement by the rack bars 160, being deferred by the cross shaft 208 in connection with the link 210, which connects with the carrying lever 200, the arm 205, which carries the shaft 208, having its upper cam surface edges 205b remaining in contact with the roller 223 until such time as the movement of the racks 160 is completed.

X-Q. 77. Is there mechanism for retracting the carrying devices against their actuating springs and further mechanism for detaining said carrying devices set in their said retracted position?

A. Yes, when the carrying devices are retracted away from the numeral wheels to very nearly their farthest extent there is such other mechanism.

X-Q. 78. Is the power that is stored in the carrying springs by said retracting mechanism derived from either the numeral wheel or wheels or any of the numeral-wheel actuating rack-bars 160?

A. No.

X-Q. 79. In the machines of the Felt patent 371,496 and 441,232 and of the respective patents to Bergmann (171,714), Schweitzer (202,057), Smith (414,335), Patterson (423,948), Lusuarde (426,029), Rector (434,201), and Davis (228,448) is the power stored in the carrying springs by the carrying-device setting-mechanism derived in each instance from or through the numeral wheel of next lower order, in the cam-and-lever device that you

Deposition of Defendant's Witness, Charles N. McFarland, stipulated in from Massachusetts case.

say controls each carrying mechanism in all of these machines of the said patents?

A. Yes, in any of these cam and lever carrying devices the power for storing the carrying springs is derived from the rotation of the cam which is a part of the numeral wheel or connected with it in some way.

X-Q. 80. If a like cam and lever device controlled each carrying mechanism in the defendant's machine, would there arise instances where one or more carrying actions would be lost because the numeral wheel bearing or moving such cam would have rotated far enough to wholly or partially reset the carrying mechanism before the numeral wheel of next higher order was released from its own actuating rack bar 160 and had received the intended carry?

Objected to by counsel for defendant as not proper cross-examination for the reason that it is impossible in the absence of a concrete embodiment of the suggested mechanism in a machine in which the outline and dimensions of the parts have been carefully arranged by a skilled mechanic, to predict precisely what may occur and for the further reason that no matter what supposition the witness may have in his mind it may not be identical with the thing supposed to exist by the counsel for the complainant and may not in practice be constructed or operate as either may now imagine.

By Mr. Clarke:

The question speaks for itself and is believed to clearly state a well known consideration that must be kept in view by any maker of multiple-order keyboard adding machine.

A. If I understand the question correctly I would say that it is my opinion, never having seen such a structure, that such instances would arise.

X-Q. 81. But, in the defendant's machine, the power for retracting or setting the carrying devices is not derived from or through the numeral wheels or their ac-

Deposition of Defendant's Witness, Charles N. McFarland, stipulated in from Massachusetts case.

tuating rack-bars and each carrying device is detained set until the proper rack-bars have an opportunity to operate, so that no intended carry is ever lost—is that so?

A. This is so.

X-Q. 82. In the defendant's machine what particular individual part immediately moves the swinging arm or arms on which each numeral-wheels actuating rack-bar is supported?

A. I presume the question refers to operations of accumulation.

X-Q. 83. Yes.

A. In which case I would state that there is a long train of mechanism leading from the main handle on shaft 100, which ends in the piece 156, which impinges on the forward side of the arm 161 and when this piece or arm 156 swings toward the back of the machine, owing to the release by the operator of the main handle of the machine, the arms 161 and 159 carrying the rack bars 160 which actuate the numeral wheel in the process of accumulation.

X-Q. 84. And if no key is set in the corresponding column the free end of the said arm 156 swings idly, merely stretching the spring 158, and the arms 161 and 159 and their rack bar 160 remain unmoved?

A. Yes, except for a slight initial movement of the arms and rack bar to correctly position the teeth of the rack for meshing with the pinions at the end of the forward stroke of the lever or handle.

X-Q. 85. But without moving the numeral wheel?

A. Yes.

X-Q. 86. In the defendant's machine the setting of a key in any given column determines whether and to what extent the numeral-wheel actuating rack-bar of corresponding order shall be moved and move its numeral wheel?

Deposition of Defendant's Witness, Charles N. McFarland, stipulated in from Massachusetts case.

A. Yes.

X-Q. 87. In the defendant's machine, is any of the power for any of the carrying derived from any finger touch upon any key of the keyboard?

A. No.

X-Q. 88. In the defendant's machine is the power for the carrying stored in the carrying springs derived from a hand lever at the side of the machine?

A. Yes, it is.

X-Q. 89. And are the carrying devices detained set, under the tension of said power-storing springs, until subsequently released by certain mechanism in the machine?

A. I will state that the carrying springs are not power-storing springs, but are power-stored springs and they are detained by suitable mechanism in the machine until such time as they are subsequently released by the proper mechanism.

X-Q. 90. In the machine of the Felt patent No. 465,-255, here sued upon, is the power for the carrying stored in the carrying springs derived from a hand lever at the side of the machine, and are the carrying devices detained set, under the tension of said power-stored springs, until subsequently released by certain mechanism in the machine?

A. The wording of the question compels an answer in the affirmative, but I will state that the function of the hand lever on the side of the machine, as well as the functions of other parts of the defendant's machine, involved in these operations, are very different in the two machines.

X-Q. 91. In the cash register contrivance shown in the Wythe patent No. 445,582, is any power stored in any carrying springs or are the carrying devices detained set, under the tension of any power-stored carrying

springs, until subsequently released by certain mechanism in the machine?

Deposition of Defendant's Witness, Charles N. McFarland, stipulated in from Massachusetts case.

A. There are in the Wythe patent named such power stored springs and they are held detained until subsequently released by proper mechanism. These springs are designated in the drawing p^4 and the carrying levers are held by the latches *r* in contact with the part p^6 and held until subsequently released by cam pins f^2 on the numeral wheels.

X-Q. 92. When, with relation to such "release" of the carrying devices, are the springs p^4 stretched, to store power in them, if they are so stretched?

A. The springs referred to are partially stretched according to the description of the operation of this machine in the patent before this release and they are afterwards stretched to effect the carrying.

X-Q. 93. But when, with respect to the "release" of the carrying devices does that stretching occur, if at all, which stores in the spring power whereby said spring effects the carrying of the intended numeral wheel?

A. Afterward.

NEW YORK, January 7, 1908.

Present, witness and counsel as before.

Cross-Examination of Charles N. McFarland Resumed by Mr. Clarke.

Witness, continuing his answer to X-Q. 93, states as follows: I will state that when I answered the last question by saying "afterward" I had in mind the operation of carrying from a wheel of lower order which has been actuated by its actuating mechanism for accumulation, to the wheel of higher order. In machines of this kind, however, there is still another kind of carrying; that is, carrying from a wheel of lower order which has been actuated only by the carrying mechanism of the

Deposition of Defendant's Witness, Charles N. McFarland, stipulated in from Massachusetts case.

wheel to its right. In a case of this kind the wheel which has just been actuated stood previously at its "9" position, so that when it was actuated one space it released the next carrying device so that the actuating spring of this carrying device operated upon such release to carry the "10" to the next wheel to the left of higher order. When such a carrying of the tens takes place in the machine under consideration the stretching of the carrying spring takes place before the release of the carrying lever. In the defendant's factory this last named kind of carrying is called a "snap carry."

X-Q. 94. In the machine of this Wythe patent is there mechanism for retracting the carrying devices against their actuating springs, or is the tension that would effect the carrying actuation "taken away," to quote from line 10 of page 5 of said patent, as the carrying devices are set back into position for carrying?

A. The devices for retracting the carrying devices in the Wythe patent retract the carrying springs along with those devices, therefore the carrying devices are not retracted against the tension of their actuating springs.

X-Q. 95. In the defendant's machine is there mechanism for retracting the carrying devices against their actuating springs, and are said carrying devices retracted against the spring tension that afterwards actuates them in carrying?

A. There is in the defendant's machine mechanism for retracting the carrying devices against their actuating springs and the carrying operation is subsequent to this retraction.

X-Q. 96. And is effected by the spring tension stored by this retraction?

A. It is.

X-Q. 97. In the machine of the Felt patent No. 465,255 here sued upon, is there mechanism for retracting the

Deposition of Defendant's Witness, Charles N. McFarland, stipulated in from Massachusetts case.

carrying devices against their actuating springs, and are said carrying devices retracted against the spring tension that afterwards actuates them in carrying?

A. According to the description of the patent referred to such mechanism is found in the patent and acts as stated in the question.

X-Q. 98. And when, in either the defendant's machine or the machine of said Felt patent, any of the retracted carrying devices has been released for carrying, is the entire tension of the corresponding stretched carrying-spring exerted upon the carrying device at the initial instant when said device is to start its forward movement, so that the numeral wheel receives the full impulse of the spring to start it from rest?

A. The entire tension of the carrying springs under the conditions named is exerted in both the defendant's machine and in the machine of the Felt patent at the initial instant when the carrying device starts in its forward movement. If, however, it is a case of carrying due to the actuation of the numeral wheel during accumulation the impulse which it is to give to the numeral wheel of next higher order is deferred until later and then practically the full impulse of the spring is given to actuating the numeral wheel. In the case of a "snap carry" the spring gives its full impulse immediately to moving the numeral wheel from rest.

X-Q. 99. But in either case, whether or not the carrying movement is slightly deferred after the release of the carrying device, the full impulse of the carrying spring's tension is delivered to the numeral wheel at the initial instant of the carrying movement of said wheel.

A. Practically so.

X-Q. 100. When, in the contrivance of the Wythe patent, the stretching, if any, of the springs pulling the carrying devices does not occur until after the release of

Deposition of Defendant's Witness, Charles N. McFarland, stipulated in from Massachusetts case.

said carrying devices, is the entire tension of such spring exerted upon its carrying device at the initial instant when said device is to start its forward movement, or is the spring simply progressively stretched more and more until its tension overcomes the inertia of the numeral wheel, if it ever does move such wheel from rest?

A. Under the conditions named in the question I would state from an examination of the description of the patent that the movement of the parts is such that the power for carrying is stored in the carrying springs to move the numeral wheel as it is needed.

X-Q. 101. In other words, at the instant when the carrying device engages the numeral wheel to effect the carrying movement, the spring is not under tension to effect the carrying, but thereafter is stretched until the numeral wheel finally moves, if said wheel is moved at all?

A. According to the description of the patent the spring is not under tension at this time to effect the carrying, but I can see no reason why the wheel would not be moved inasmuch as it is only a matter of the relative strength of the spring to the resistance to be overcome in moving the numeral wheel.

X-Q. 102. In the defendant's machine and in the machine of the Felt patent No. 465,255 the spring is under full tension when any carrying device starts from rest to effect the carrying movement, is it not?

A. Yes.

X-Q. 103. The strength of small parts, such as stop-detent teeth, and their speed of movement, and the cumulative resistance of a plurality of springs when all are to be simultaneously stretched, and the elasticity of the springs themselves, and the confined spaces within which they must act, are all among the factors that have to do with limiting the tensile strength of springs that are usable in such mechanism, are they not?

Deposition of Defendant's Witness, Charles N. McFarland, stipulated in from Massachusetts case.

A. This is true, but such difficulties have been overcome in similar cases in actual practice.

X-Q. 104. Did you ever see the machine of this Wythe patent?

A. No, I have never seen it.

X-Q. 105. Do you know that a machine has ever been built like the drawings of said patent?

A. I do not know.

X-Q. 106. What, if any, means are provided, in the machine of this Wythe patent, to overcome the momentum acquired by the registering wheels in response to the direct actuation of their key devices of corresponding order?

A. In the Wythe patent there is no such direct actuation. If you mean the movement of the numeral wheels to accumulate an amount thereon, I will state that upon the depression of a key, as shown in Figure 5 of the Wythe patent, the bars B are lifted by such depression, bringing the part b^2 into the pathway of the graduated segment having the steps h^1, h^2. The segment is subsequently released through the means of the lever F^2 rotating with the shaft F^1 through the action of a mechanism connected with the draw which moves to thus rotate the shaft F^1 when the drawer flies open. When such release is effected the graduated quadrant before mentioned is caused to rotate in a direction opposite to the direction of the hands of a watch owing to the release of the part of this swinging quadrant designated h^9 from the pin k. This rotation of the quadrant carries the numeral wheel with it through the medium of the pawl h^6 and the two swing together until one of the notches in the graduated quadrant which corresponds to the key depressed comes in contact and is stopped by the piece b^2 fastened to the vertical bar B. The presence of the pawl h^6 in the teeth of the numeral wheel, as well as the

Deposition of Defendant's Witness, Charles N. McFarland. stipulated in from Massachusetts case.

resistance exerted by the roller pawl j, which is always in contact with the teeth of the numeral wheel, would seem to furnish all the necessary mechanism to prevent overrotation of the numeral wheel due to accumulation.

X-Q. 107. Is the pawl h^6 pivoted on the quadrant?

A. It is pivoted to the arm h, which is connected to the quadrant at one side. The arm 6 is rigidly connected to the quadrant.

X-Q. 108. How is the pawl h^6 released from the numeral wheel when the quadrant has moved said wheel far enough to add the desired amount?

A. It is moved from engagement with the numeral wheel when the shaft F′ is rotated in the direction of the movement of the hands of a watch carrying the small pin f′ in contact with one end of the pivoted piece h^4, the other end of which engages with the pawl h^6 at the end opposite the one which engages with the teeth of the numeral wheel.

X-Q. 109. With respect to the end of the movement of the part that carries said pawl, just when is the release of said pawl from the numeral wheel begun and completed?

A. The pawl h^6, after rotating the numeral wheel remains engaged with the numeral wheel after such operation just so long as the drawer of the cash register remains open, so that the pawl h^6 does not begin to be disengaged from the numeral wheel until the operator of the machine chooses to close the drawer, and, judging from the location of the pin f′ on the shaft F′, which is quite distant from the end of the beforementioned pivoted piece h^4 with which it must come in contact before the beginning of such movement, I should state that it began to be moved from its contact with the numeral wheel at very nearly the end of the backward stroke of the drawer.

Deposition of Defendant's Witness, Charles N. McFarland, stipulated in from Massachusetts case.

X-Q. 110. At lines 35 to 41 of page 4 of the specifications of this Wythe patent it is stated that a friction brake is provided to prevent the numeral wheels "from being carried too far forward by their momentum"; if this brake were not present at all, how might the numeral wheels be thrown "too far forward by their momentum"?

A. If there was not sufficient resistance elsewhere, there might be trouble due to the momentum of the numeral wheel.

X-Q. 111. Is there anything but frictional "resistance elsewhere" to such overthrow?

A. Yes, there is the resistance due to the tension of the coil spring I, which is connected with the small pivoted part h^4, which moves the pawl h^6 into, or out of, engagement with the numeral wheel.

X-Q. 112. Is there any positive stop, as contradistinguished from this mere spring or frictional existence, to prevent such overthrow of the numeral wheel?

A. I have found no description of such a stop in the specification.

X-Q. 113. It is the spring resistance of the spring I that holds the pawl in engagement with the numeral wheel to move the numeral wheel, is it not?

A. Yes.

X-Q. 114. And it is the spring resistance of the friction brake j that is supposed to stop the numeral wheel if the latter overcomes the resistance of the spring I and tends to escape from the pawl?

A. That is the way I understand the patent.

X-Q. 115. Then the spring brake j and the pawl-holding spring I are pitted against each other to determine whether the pawl properly engages the numeral wheel or the numeral wheel escapes from the pawl?

A. No, the way I would explain it is that the pawls h6 and the spring-held roller pawl j act together to re-

Deposition of Defendant's Witness, Charles N. McFarland, stipulated in from Massachusetts case.

sist overrotation after accumulation. It is true that in actuating the numeral wheel during its engagement with the wheel the pawl h6 has to overcome the resistance due to the action of the friction brake, or spring-held roller pawl, j, but I believe that the construction shown in the drawings of the patent is such that the pawl h6 would thus overcome the beforementioned resistance.

X-Q. 116. If the spring brake j is stiff enough to overcome any momentum that the spring-held pawl h6 may give the numeral wheel, what is to prevent the resistance of said spring brake from overcoming the spring resistance of said pawl and causing the numeral wheel to escape from said pawl before said wheel has been moved far enough to add the desired digit?

A. This fact prevents it: In the first place, I will state that the momentum acquired by the wheel in its movement by the pawl h6 depends largely upon the speed at which it is actuated. At a low speed this momentum would amount to almost nothing—at a very high speed the wheel would gather considerable momentum. Whatever momentum is developed in the wheel helps the pawl h6 in its work of further moving the numeral wheel so that the resistance due to the spring-held pawl j is considerably offset in so far as it has a tendency to force the pawl h6 out of engagement with the numeral wheel. Aside from this, when the pawl h6 is moving the numeral wheel against the resistance of the spring pawl j it has the advantage in overcoming this resistance of having its pivot so located that the surfaces of the pawl and the teeth of the wheel occupy practically a plane at right angles to the line of force exerted. This fact tends to neutralize any tendency of the pawl j to throw the pawl h6 out of engagement with the numeral wheel through the resistance of its spring. Now when the pawl h6 has ceased its movement to actuate the numeral wheel, the

Deposition of Defendant's Witness, Charles N. McFarland, stipulated in from Massachusetts case.

coil spring I still exerting its power to retain the pawl h6 in engagement with the numeral wheel co-acts with the spring-held roller pawl j to prevent further rotation. As to whether there would be further overrotation of the numeral wheels this would depend altogether upon the speed at which the numeral wheels were rotating at the instant just before the pawl h6 ceased its movement.

X-Q. 117. The patent says that the spring brake j is provided because the numeral wheel may acquire such momentum as to escape from the spring-held pawl that gives it said momentum. Now, if the resistance of the spring-brake is small enough not to overcome the spring that holds the pawl into the numeral wheel, what certainty is there that said brake will always overcome any momentum given the wheel by the pawl and so always prevent overthrow of the wheel, or is there no such practical certainty?

A. Under the conditions named there is no such certainty.

X-Q. 118. Do you know of any practical adding machine in which a mere spring brake is used to prevent overthrow of adding wheels actuated by spring-held pawls—that is, pawls held into engagement by springs?

A. My experience with adding machines has brought me more in contact with that class of machines used in banks and accounting rooms, and I do not recall among the machines with which I am acquainted a machine where such mechanism is used for the purpose mentioned. I have not examined all of the class of machines to which this Wythe machine belongs, but I do not recall that I have found this condition present in that class of machines.

X-Q. 119. Do you know of any practical adding machine in which a spring or friction brake, as contradistinguished from a positive mechanical stop, is relied upon to prevent overthrow of the numeral wheels?

Deposition of Defendant's Witness, Charles N. McFarland, stipulated in from Massachusetts case.

A. I do not recall any such machine at the present time. The reason for this is that the speed requirements of adding machines designed for practical use in banks and accounting houses is such that positive means must be employed to prevent overrotation due to this high speed requirement. It would seem to me, however, that in a cash register, such as the one represented by the Wythe patent, where the speed of the accumulating wheels was governed by the speed with which the drawer of the register is actuated that such means for preventing overrotation as is designated in that patent ought to be sufficient.

X-Q. 120. If the drawer is jerked open the wheels will be actuated faster than if it is pulled open more slowly, and if the digit "8" or "9" is being added the wheels will acquire greater momentum than if the digit "1" or "2" is being added—is that not so?

A. That is true.

X-Q. 121. In the defendant's own machine there is a spring-held friction-roller brake constantly bearing on the numeral wheel, as shown fragmentarily at the top of the Cut 3 you put in evidence, is there not?

A. Yes, there is.

Cut 3.

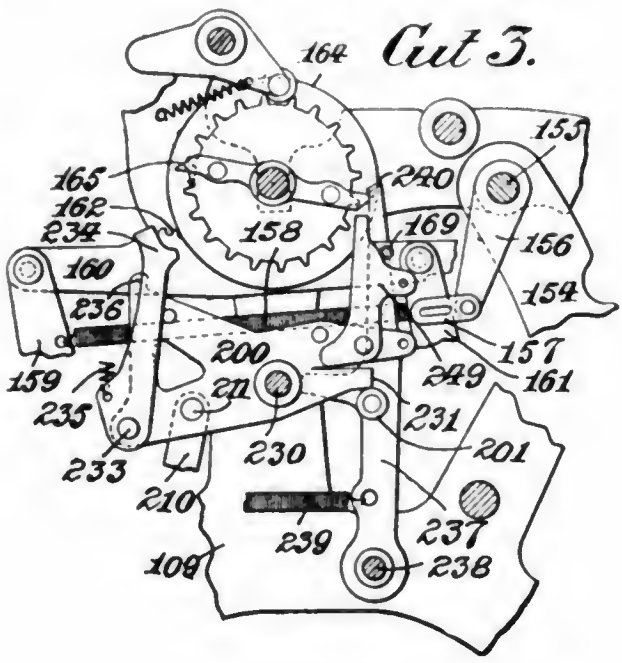

Deposition of Defendant's Witness, Charles N. McFarland, stipulated in from Massachusetts case.

X-Q. 122. But you have testified, have you not, that, notwithstanding the presence of this friction-brake in the defendant's machine, you yourself, with Mr. Wales, devised a positive mechanical stop, the detent-tip 236 of

Cut 4.

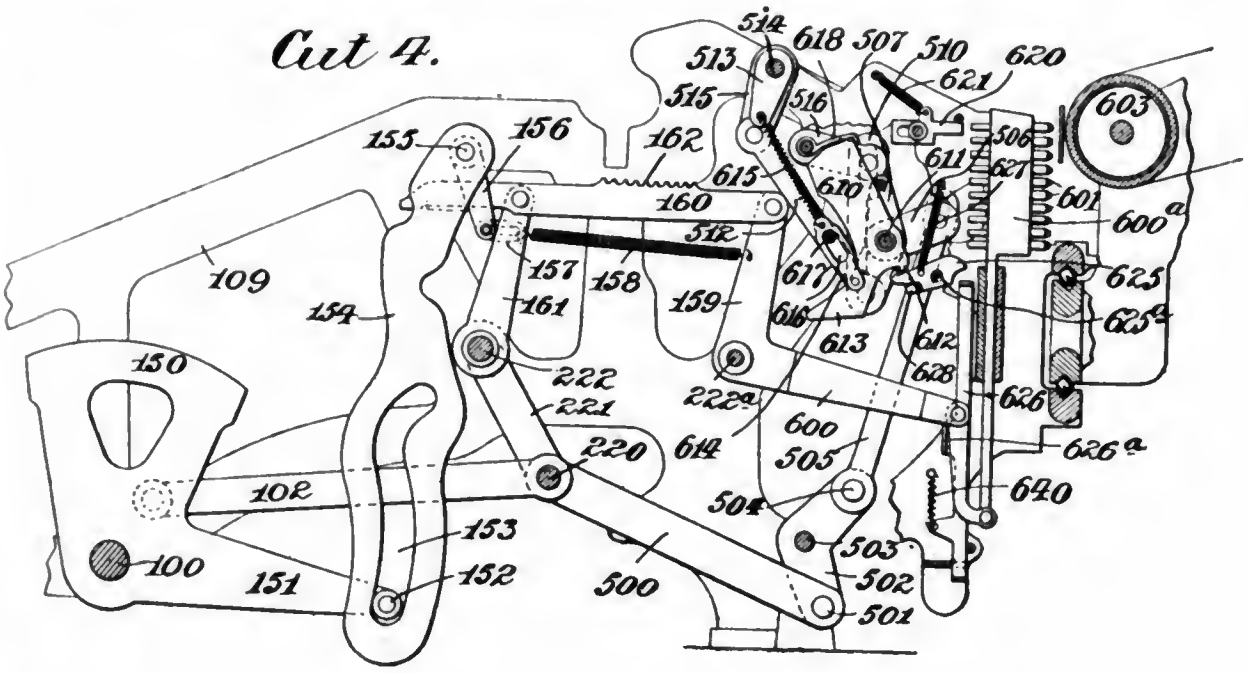

your cut 14, to prevent overthrow of the wheel by a carrying impulse, and also that the defendant inserted in its machines the positively acting stop-piece or detent 249, of your cut 3, to prevent overthrow of the numeral wheel by an impulse from its direct-actuating rack-bar?

A. I did so testify, but I wish to state that the spring-held friction-roller pawl to which you refer was never depended upon and was not designed to prevent overrotation due to either an impulse of the numeral wheel due to carring or to an impulse given to the numeral wheel due to the direct accumulation on the numeral wheel by the rack. Prior to the time when Mr. Wales and myself put this new arrangement into the Wales machine there was mechanism which was supposed to prevent such overrotation besides the roller pawl referred to. The

Deposition of Defendant's Witness, Charles N. McFarland, stipulated in from Massachusetts case.

mechanism, however, was not satisfactory, and, therefore, the new devices were put in.

X-Q. 123. What views in the Wythe patent best show the springs, and by what reference letter are they indicated, that hold the friction brakes j into constant contact with the numeral wheel?

Objected to on the ground that the patent is the best evidence of what is shown in it or the drawings, and that the witness is under no obligation to assist the counsel for the complainant in making such a selection.

A. This spring is shown in Figures 1, 4 and 5—in Figure 1, which is a plan view of the machine, these springs are shown looking at the side of the coil, and in Figures 4 and 5 we have end views of the spring coil. In all the views the spring is designated by j'.

X-Q. 124. What is the comparative size of these springs, as shown in said drawings, and the springs p4 that are said to pull the carrying devices in the carrying actions?

A. I do not believe that it is possible from a drawing of this character, without specifications as to sizes of wire used, diameters to be used, etc., that very much can be ascertained as to the strength of springs of this character. In the drawings, the diameter of the coil of the spring j' appears considerably larger than the diameter of the coil of the spring p^4 referred to. I note also that the wire of the spring j' is represented by two lines, whereas the spring p4 is represented by one line. This would indicate to my mind that the wire of spring j' is intended to be larger than that of p4. It is hard, however, without an actual test of two springs of this kind to determine their relative strength.

X-Q. 125. The resistance offered by the spring-brake j would have to be overcome, would it not, by the carrying spring p4 of the next lower wheel at each carrying

Deposition of Defendant's Witness, Charles N. McFarland, stipulated in from Massachusetts case.

operation, and would have to be small enough to be so overcome?

A. Yes, it would.

X-Q. 126. If the friction brake or arm j were positively held into the numeral wheel, so as to be a positive stop instead of a mere friction stop, such a positive stop would have to be lifted out of the way by some mechanism before the carrying devices could act at all—is not this so?

A. I think that they would have to be so moved.

X-Q. 127. Do you know of any practical adding machine at the present time in which there is not provided mechanism for withdrawing the positive stops that prevent overthrow from direct actuation of the numeral wheel when the carrying impulse is given to said numeral wheel?

A. I have in mind a practical adding machine which has no stops such as have been described which prevent overrotation of the numeral wheels due to an impulse given to them in the operation of carrying. In this machine, of course, there is no mechanism for withdrawing such stops from engagement with the numeral wheel. This is the well-known Burroughs Adding Machine?

X-Q. 128. You misunderstood the question. Do you know of any practical adding machine at the present time in which, to allow the carrying impulse to be given a numeral wheel, there must not be mechanism to positively withdraw the obstruction of the positive stop that prevents the overthrow of said wheel by its direct actuating mechanism?

A. I do not know of any machine which has such stops which does not have to have mechanism for withdrawing them from engagement with the numeral wheel, either positively actuated or actuated by means of springs. There is one machine which, as I stated before, does not

Deposition of Defendant's Witness, Charles N. McFarland, stipulated in from Massachusetts case.

have such stops, and therefore, has no mechanism for moving such stops out of engagement with the numeral wheels. This is the beforementioned Burroughs Adding Machine.

X-Q. 129. But in the Burroughs machine, whatever positively stops a directly actuated numeral wheel is so arranged as not to obstruct the same wheel when a carrying impulse is given said wheel, is it not?

A. Necessarily so.

X-Q. 130. In the machine of the Wythe patent, is there any mechanism or means to positively remove the resistance of the friction brake j when the wheel held by it is given a carrying impulse, or does the carrying spring p4 simply overcome the frictional resistance constantly exerted upon said wheel by the said friction brake?

A. There is no such mechanism shown or described in the Wythe patent, and the carrying springs p4 are, therefore, required to overcome the resistance due to the friction pawl j.

New York, Jan. 8th, 1908.

Met pursuant to adjournment.

Present witness and counsel as before.

Cross-Examination by Mr. Clarke Continued.

X-Q. 131. In the machines of the earlier Felt patents to which you referred, Nos. 371, 496 and 441,232, were the carrying levers all set back against the full tension of their carrying springs and detained so set during the actuation of the respective numeral wheels by the corresponding column actuators of said wheels?

A. The carrying devices of the two patents named belong to the class known as cam and lever devices. The action of the cam and lever in carrying the tens is a well-known principle. The carrying levers are retracted

Deposition of Defendant's Witness, Charles N. McFarland, stipulated in from Massachusetts case.

against the full tension of the carrying springs and for the sake of uniformity in the resistance thus offered to the rotation of the cam and numeral wheel the cam is usually so made that almost the entire revolution of the cam and wheel is taken up in this retraction. This construction is quite necessary in key actuated machines. The levers, therefore, are not wholly retracted while the numeral wheel is rotating the space of one tooth, as in carrying devices of later pattern. Therefore, the cam itself was constructed so as to detain the carrying lever until such time as more than "9" was added on a given numeral. The carrying devices not being wholly retracted as above described, they were not detained until the end of the actuation of the numeral wheel due to its corresponding column actuator.

X-Q. 132. In the machine of the Felt patent No. 465255, and in the defendant's machine, are the carrying levers all set back against the full tension of their carrying springs and detained so set before and during the actuation of the respective numeral wheels by the corresponding column actuators of said wheel?

A. The carrying levers in both machines are all set back against the full tension of their carrying springs. In the defendant's machine the levers may be released during the actuation of the numeral wheels by the corresponding column actuators of said wheel, but the operation of carrying follows after the actuation has ceased. In the Felt patent 465255 the carrying levers perform the operation of carrying immediately upon their release, which must be during the actuation of the wheel by its column actuator. In both machines they are detained before the actuation of the numeral wheel by the column actuator.

X-Q. 133. In the machine of the Wythe patent to which you have referred are the carrying levers all set back against the full tension of their carrying springs and

Deposition of Defendant's Witness, Charles N. McFarland, stipulated in from Massachusetts case.

detained so set before and during the actuation of the respective numeral wheels by the corresponding column actuators of said wheels?

A. As I have explained before, the carrying levers and their springs are retracted together, the movement to give them tension occurring afterwards. After the carrying levers in this machine have been so retracted, the levers are detained from the operation of carrying before and during the actuation of the numeral wheel.

X-Q. 134. But no carrying operation could take place while the springs are not under carrying tension, and so what you have just called a "detaining" before and during the direct actuation of the numeral wheel is not a detaining from the carrying impulse, and said impulse is not given until after the actuation of the numeral wheel by the column actuator is completed and the carrying spring stretched by the subsequent movement of pushing in the cash drawer?

A. It is true that the carrying operation could not take place until the carrying spring had been charged with sufficient energy to perform the operation, which charging takes place upon the closing of the cash drawer. Therefore, the detaining devices do not detain the carrying levers against the impulse of their charged springs, but the carrying levers are nevertheless detained from performing the operation of carring, even though they have been released by the proper mechanism to do so when the time for such operation came. It is explained in the patent that there is sufficient tension in the spring to allow such carrying devices to be released from their latches as have been selected by the rotation of the numeral wheel.

X-Q. 135. But this last named tension is not a carrying tension?

A. No, it is not.

Deposition of Defendant's Witness, Charles N. McFarland, stipulated in from Massachusetts case.

X-Q. 136. In the defendant's machine the series of detents, No. 249, of which one is shown in your Cut 3, prevent overrotation of all the numeral wheels, do they not?

A. They prevent overrotation of all the numeral wheels after actuation due to the movement of the racks in accumulating upon the numeral wheel.

X-Q. 137. And they normally stand in position to prevent overrotation of the numeral wheels from any cause while the said wheels are not under the impulse of their respective proper carrying devices?

A. No, this is not the purpose for which these stops were designed. They do not at any time prevent overrotation except at the end of the actuation of the numeral wheels by the racks. I will further state that, if by the term "normally stand" is meant the position which they occupy when the machine is standing in normal position, these stops have no function whatever and are not in contact with the numeral wheels, their function having been performed before the machine came to its normal position.

X-Q. 138. Are they not normally in such position as to prevent the wheels from being turned to zero, to cancel the reading, until the said detents, as a preliminary incident of the canceling operation, have been moved out of the way.

A. It is true that the position which these stops occupy when the machine is in normal position there would prevent the rotation of the numeral wheel in any kind of an operation, and they would be incidentally moved out of this position in any kind of an operation which necessitated the rotation of the numeral wheels.

X-Q. 139. And rotation of the numeral wheels is necessary to cancel the reading on the machine?

A. Yes.

X-Q. 140. And the movement of the mechanism that

Deposition of Defendant's Witness, Charles N. McFarland, stipulated in from Massachusetts case.

resets the wheels, in the canceling operation, causes these stops, without other act of the operator, to be incidentally moved out of their aforesaid normal position so that the wheels may be rotated?

A. The movement of the mechanism which resets the numeral wheels to zero, as you have described, allows the stops to be moved from engagement with the numeral wheels through the agency of other mechanism.

X-Q. 141. But no additional act of the operator is required to effect this displacement of the said stop?

A. That is true.

X-Q. 142. In the machine of the Felt patent No. 465255 sued upon are the overrotation stops 22 normally in such position as to prevent the wheels from being turned to zero, to cancel the reading, until the said detents, as a preliminary incident of the canceling operation, have been moved out of the way?

A. These stops 22 in the patent mentioned, which are designed for overrotation in the operation of carrying, do stand normally in such position as to prevent the rotation of the numeral wheels in the operation of canceling or returning the wheels to zero. Therefore they must be removed from this position in order to effect such rotation of the numeral wheel.

X-Q. 143. And in the said machine does the movement of the mechanism that resets the wheels, in the canceling operation, cause these stops, without other act of the operator, to be incidentally moved out of their aforesaid normal position, so that the wheels may be rotated?

A. By reference to the patent it will be seen that the cancelation operation is effected by the depression of the key stem 64 by the operator. There are the connections to this key stem 64 which cause the stops 22 to be moved out of engaging position with the numeral wheels previous to the rotation of the wheels.

Deposition of Defendant's Witness, Charles N. McFarland, stipulated in from Massachusetts case.

X-Q. 144. And the said rotation of the wheels is effected by the same plunge of the key 64?

A. Yes.

X-Q. 145. So that no act of the operator other than the key depression that effects the resetting of the wheels is required to move the stops 22 out of the way of such rotation of the wheels?

A. No, but one hand operation is required for effecting the two operations.

X-Q. 146. And in the defendant's machine but one hand operation is required to effect the two functions of resetting the numeral wheels and preliminary moving the overrotation stops 249 out of the way of such rotation of the said wheels?

A. Properly speaking, it requires, in order to effect a canceling operation, two hand operations—that is—the depression of the total button and the pulling of the hand lever. This effects the movements described in the question.

X-Q. 147. But it is to the one pulling of the hand lever that both of the movements described in my last question respond, is it not?

A. No, because the energy stored in the springs, which effects the movement of the stops, was stored in the spring on the return stroke of the previous operation.

X-Q. 148. But such energy is normally in said springs when the machine is at rest and the displacement of the said stops out of the way of the numeral wheels actually takes place upon the same pulling of the hand lever that moves the canceling mechanism to reset the wheels?

A. That is true.

X-Q. 149. Does claim 11, of patent No. 465255 sued upon, anywhere say that the overrotation stops named in it prevent overrotation in response to carrying impulses rather than column actuator impulses, or *vice versa.*

Deposition of Defendant's Witness, Charles N. McFarland, stipulated in from Massachusetts case.

A. The claim does not state this, but Mr. Felt said in his testimony that these stops are the stops 22 of the patent and the patent says that these stops were designed for the purpose stated—that is—to prevent overrotation in carrying.

X-Q. 150. In your direct testimony you quote Mr. Felt, in the third paragraph from the end of your answer to Q. 21, in such manner as to imply that he said the overrotation stops No. 249 in the defendant's machine were stops to prevent overrotation "in *carrying.*" Referring to Mr. Felt's testimony you do not find, do you, that Mr. Felt actually said that these overrotation stops in the defendant's machine were to prevent overrotation in *carrying?*

A. I do not find in Mr. Felt's testimony that he described the function of the stops 249 in the defendant's machine, but had he completely answered Q. 8, which covers that part of his testimony, he would have been obliged to make such description. Referring to this question I note that Mr. Felt was asked, "Please state what you find to be the fact as to this, in reference to each one of these claims taken in order; and in respect to each claim whose subject matter you find in the said defendant's machine, please state what said subject matter is designed to cover, what structures in your patent drawings represent an embodiment of such subject matter, and what structures in the defendant's machine represent such subject matter." Mr. Felt did not fully answer this question or he would have been obliged to state the functions of the stops in the two machines. I was, therefore, obliged to look up the matters myself and testify accordingly.

X-Q. 151. In short, Mr. Felt did testify that there were overrotation stops in both machines, but did not state as to either machine whether the overrotation prevented

Deposition of Defendant's Witness, Charles N. McFarland, stipulated in from Massachusetts case.

would be due to carrying impulses or to column actuator impulses or *vice versa?*

Counsel for defendant instructs the witness that he is not required to answer anything but questions.

A. He did testify to that extent and therefore did not fully answer the question asked of him.

X-Q. 152. In the defendant's machine do the column-actuator rack bars 160 have their own arresting devices for stopping them at the end of their stroke, aside from the detents 249 that prevent overrotation of the numeral wheels?

A. These rack bars have arresting devices but the stops 249 have nothing to do with arresting the racks.

X-Q. 153. Do the column actuators move the detents 249 into position to prevent overrotation of the numeral wheels and hold said detents in said acting position?

A. The rack bars 160 do perform this function.

X-Q. 154. And are the said detents each released by a spring when the said rack bars are withdrawn to actuate the numeral wheel?

A. When the rack bars 160 start on their forward movement carrying the pins 169 along with them the springs on the stops 249 pull the stops away from the numeral wheel as fast as the movement of the pins 169 will allow.

X-Q. 155. And until said detents are so released they normally lock or prevent the numeral wheel from being rotated except in response to its carrying device?

A. When the detents referred to stand normally there is no possible movement which could be imparted to the numeral wheel which the detent could obstruct.

X-Q. 156. But the said detents normally stand in the path of the ratchet teeth of the said numeral wheels so that said wheels cannot be rotated by any extraneous

Deposition of Defendant's Witness, Charles N. McFarland, stipulated in from Massachusetts case.

means until the carrying devices or the rack bars are properly put into operation?

A. The parts which you call detents cannot, strictly speaking, be so called. They are merely stops and at no time perform a detaining function. The stops do stand normally in the pathway of the teeth of the numeral wheel, but this position is only incidental and in this position no function is performed.

X-Q. 157. And they are thrown into this position by the column actuators to arrest or prevent any overrotation of the numeral wheel from the impulse of such column actuators or rack bars?

A. That is true to the extent which I have explained before.

X-Q. 158. When any numeral wheel is to be moved by its carrying device how is the said stop 249 of said wheel withdrawn to permit the wheel to be so moved?

A. It is withdrawn by the action of the same carrying lever which actuates the numeral wheel in carrying.

X-Q. 159. The said carrying lever is at one movement the lifting device for both the said stop and the said carrying pawl, so that the two move together, the stop getting out of the way in the same angular direction as the carrying pawl moves forward to impel the numeral wheel?

A. That is true, except that the movement with reference to the stop is not a lifting movement, but both the stop and the carrying pawl move in the same angular direction and at the same time.

X-Q. 160. And this is because the said carrying pawl and said stop are both mounted on the same lever, the carrying lever?

A. Yes.

X-Q. 161. And this action releases the numeral wheel

Deposition of Defendant's Witness, Charles N. McFarland, stipulated in from Massachusetts case.

from the obstruction of said stop during the carrying operation?

A. It removes the stop out of the pathway of the teeth on the numeral wheel, but it does not release the wheel from anything, because the stop does not touch the numeral wheel, except at the instant when it prevents overrotation after accumulation. It is, however, moved out of the way so that the carrying operation can be performed. The stop was located on the end of the carrying lever because that was the simplest way of getting it out of the way when the numeral wheel had to be actuated in a carrying operation.

X-Q. 162. And during the carrying operation the said stop and the numeral wheel and the carrying pawl all move together in the same angular direction, and after the carrying operation is concluded the stop returns to its normal position, intercepting the path of the ratchet teeth of the wheel, when the carrying pawl is again retracted into position for carrying?

A. This is true with respect to the movement of the carrying pawl, the overrotation stop and the numeral wheel and the stop 249 is brought back into an intercepting position with the numeral wheel but merely as an incident to the resetting of the carrying levers because it cannot in this position perform any further function until after the numeral wheels have again been rotated by the actuation of the racks when adding a subsequent item.

X-Q. 163. The Stud 169, referring to your Cut 3, on each column actuator rack bar is the device that forces the corresponding detent 249 into its arresting position to arrest or prevent overrotation of the numeral wheels by any impulse of the said rack bar?

A. That is true.

X-Q. 164. The support or carrying lever on which the detent or stop 249 is pivoted has a rising and falling

Deposition of Defendant's Witness, Charles N. McFarland, stipulated in from Massachusetts case.

movement as the carrying spring it expanded or retracted in the carrying operations?

A. That is true also.

X-Q. 165. Each of said pivoted stops 249 has a spring that tends constantly to swing said stop out of the position in which it acts to arrest the overrotation of the numeral wheels by the impulse of the rack bar?

A. That is true.

X-Q. 166. Who put this stop 249 into the defendant's machine, and when was it done?

A. It was the invention of Charles Wales and it was put in the machine at the same time that the carrying pawl 234 and the overrotation stop 235 was put into the machine, which was a few weeks after the first machines were made and shipped. To the best of my knowledge at the present time this was early in the spring of 1905.

X-Q. 167. And was that when Mr. Wales, as you say, invented such stop?

A. If my memory serves me well, it was shortly subsequent to his invention of the stop. I do not remember the exact time when Mr. Wales invented the stop, nor the exact time when the stop was put in, but I do know that a number of machines were built without it.

X-Q. 168. In the machine of the Felt patent No. 465255, is the column-actuator over-rotation-stop 19 mounted on or in any manner connected with or moved by, or moved in unison with either the carrying lever or carrying pawl or carrying spring that effects any carrying movement of the corresponding numeral wheel, or is it a stop entirely independent of the carrying devices?

A. It is independent of the carrying devices but it prevents over-rotation after accumulation and therein it is like the stop 249 of the defendant's machine.

X-Q. 169. In the defendant's machine are there recording or printing devices and actuating mechanism

Deposition of Defendant's Witness, Charles N. McFarland, stipulated in from Massachusetts case.

therefor and type hammers and springs for impelling said type hammers?

A. There are.

X-Q. 170. And is there a series of pawls, one for each hammer, adapted to selectively detain, from striking the types, the hammers in those orders where no figures are to be printed?

A. There is in the defendant's machine a series of intercepting hooks which selectively intercept such hammers as are not required to print after such hammers have been released when it is desired to record an item.

X-Q. 171. Are these "intercepting hooks" the same parts that Mr. Felt, in his testimony, chose to call hammer pawls?

A. Judging the best I can from the imperfect description of the location of the hammer pawls which Mr. Felt gave in his testimony and having introduced no drawings in his testimony to show them I should say that these are the hooks which he chooses to call hammer pawls.

X-Q. 172. And is there a series of separate devices for selectively displacing such of these "intercepting hooks" as are not desired to intercept their corresponding hammers, so that in the orders where said hooks are so displaced the hammers are released or relieved from such intercepting action and duly strike their type to print the required figures?

A. I believe that the mechanism in the defendant's machine does answer to the general terms included in the question except that the hammers do not strike the type immeditaely but strike an intermediate part which in turn strikes the type.

X-Q. 173. And are these separate devices for selectively displacing the said hammer hooks the "vertical pieces of sheet metal immediately in front of the upright stems of the type heads" mentioned by Mr. Felt in the

Deposition of Defendant's Witness, Charles N. McFarland, stipulated in from Massachusetts case.

third paragraph of page 25 of the printed record of his deposition?

A. I refer to the parts designated 626 in Cut 4 which I have submitted and I have assumed in my testimony that these are the vertical pieces of sheet metal which Mr. Felt referred to in the part of his testimony mentioned.

X-Q. 174. And do these said parts 626 receive their operative movement from the same mechanism that actuates the recording devices or type heads of the same order?

A. Again referring to Cut 4, the parts 626 receive their movement and are actuated in their movement to lift the hammer hooks through the energy stored in the spring 640 which springs are allowed to actuate their bars 626 when the arm 600 begins its upward movement. The part 626a of the bar 626 previous to such movement impinges upon the lower side of the arm 600 and when the arm 600 is moved upward the bar 626 is thereby forced upward by the spring 640 following the arm 600 until stopped by other means. The arm 600 also actuates the type bar 600a bringing it into position to print.

X-Q. 175. And the said arm 600 and type bar 600a are only so moved when a key has been set, to record a significant digit, in the corresponding order of the machine?

A. No, the arm 600 and the type bars 600a could not possibly move under those conditions provided nothing further was done. What you have stated in your question is true providing the operating lever is moved.

X-Q. 176. In the machine of the Felt patent No. 465255 do the separate devices for releasing each hammer receive their operative movement from the actuating mechanism of the recording-disk or type-segment of the corresponding order?

Deposition of Defendant's Witness, Charles N. McFarland, stipulated in from Massachusetts case.

A. All these parts receive their operative movement through the depression of the numeral key. There is shown in Figure 8 of the patent the lever 11 which is actuated by the numeral key and which gives movement to the type segment or head and there is a lever 16 which is actuated by the numeral key as well whose upper extension 86 gives operating movement to the releasing devices of the hammer.

X-Q. 177. In the defendant's machine, entirely apart from the hammer hook lifters 626, are there devices for displacing, into non-intercepting position, all the hammer-hooks to the right of the one that is lifted to allow a digit to be printed in any of the higher orders of the machine, so that such displacement of said hammer-hooks of the lower order or orders will permit zeros to be recorded automatically in all the proper lower places of the number to be printed?

A. Yes, there are such devices.

X-Q. 178. And do such devices consist in pins or lugs, one for each hammer-hook, projecting toward the left of the machine and each adapted to impinge against a flange or shoulder of the adjacent hammer-hook of next higher order, so as to lift said hammer-hook of lower order when the hammer-hook of higher order is in any manner lifted?

A. These devices consist of an arm or projection of the hammer-hook itself toward the left of the machine and engages with a shoulder on the next hammer-hook of higher order and thereby when any hammer-hook of higher order is swung out of an intercepting position with the hammers, carries all the hammer-hooks to the right of lower order out of intercepting position, with respect to the hammers.

X-Q. 179. Do you find in any patent of the prior art either hammer-pawls or hammer-hooks with such over-

Deposition of Defendant's Witness, Charles N. McFarland, stipulated in from Massachusetts case.

lapping pins or arms adapted to so displace the hammer-pawls or hammer-hooks of lower order as to permit the hammers to effect the printing of the zeros normally presented to the printing line by the typeholders of such lower order?

A. I do not find the specific elements mentioned in any patent or patents in the prior art. As I have stated before, however, I find the same principle upon which this is accomplished in the Wythe patent No. 445,582. In this patent, as I stated before, the zeros are merely indicated instead of being printed. There is no printing mechanism in the Wythe machine.

X-Q. 180. And in the Wythe machine are the zeros normally in position to be read or are they shifted into such position by the actuating mechanism you refer to?

A. They are shifted into position as if they were connected to a lever similar in its action to the swinging hammer-hooks of the defendant's machine or the swinging hammer-pawls of the Felt machine.

X-Q. 181. Are there any hammers or hammer-hooks or hammer-pawls or printing types in the Wythe contrivance?

A. I have stated before that there is no printing mechanism in the Wythe patent and I have also stated that the mechanism referred to in the Wythe machine is simply a zero indicating mechanism; but that the same principle is involved in showing to the eye of the observer just where zeros are required.

X-Q. 182. Was there zero indicating mechanism for the same purpose as Wythe's in all cash registers for many years prior to Wythe's cash register?

A. I am not prepared to say just what mechanism there was in all cash registers prior to this time. I do not recall having seen this particular mechanism in any

Deposition of Defendant's Witness, Charles N. McFarland, stipulated in from Massachusetts case.

other cash register prior to this time. Such mechanism may have existed.

X-Q. 183. You haven't tried to find out? A. No.

X-Q. 184. Referring now to the Burroughs patent No. 504,963, does the said patent show any one lever that is movable to one position to operate the releasing mechanism and is movable to another position for the purpose of locking or preventing the movement of said releasing mechanism, and if so, please indicate said lever by any reference numeral which you may have?

A. There is no such lever in this Burroughs patent.

X-Q. 185. In the defendant's machine, does the part you called a "push bar" and that Mr. Felt called a "hand lever," in discussing the key-releasing mechanism, move to one position to operate key-releasing mechanism and move to another position to lock or prevent said releasing mechanism from being operated, and if so, which of the cuts that you produced show these two respective positions?

A. No, this part is not moved to positions for accomplishing the results named, and I have no cuts showing such operations.

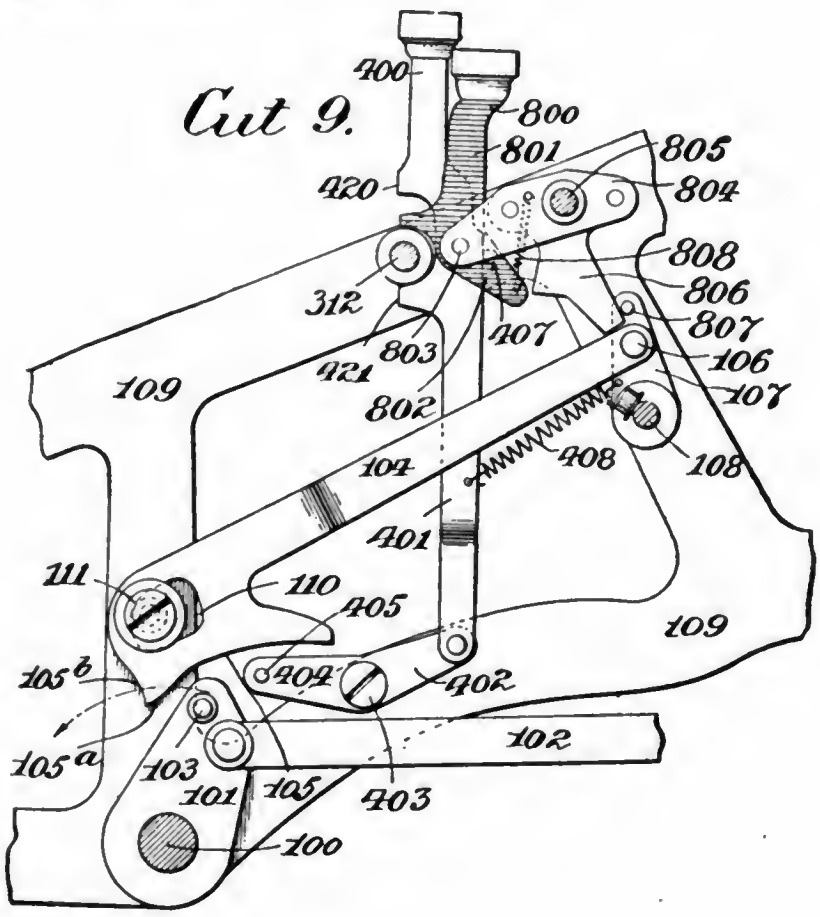

Deposition of Defendant's Witness, Charles N. McFarland, stipulated in from Massachusetts case.

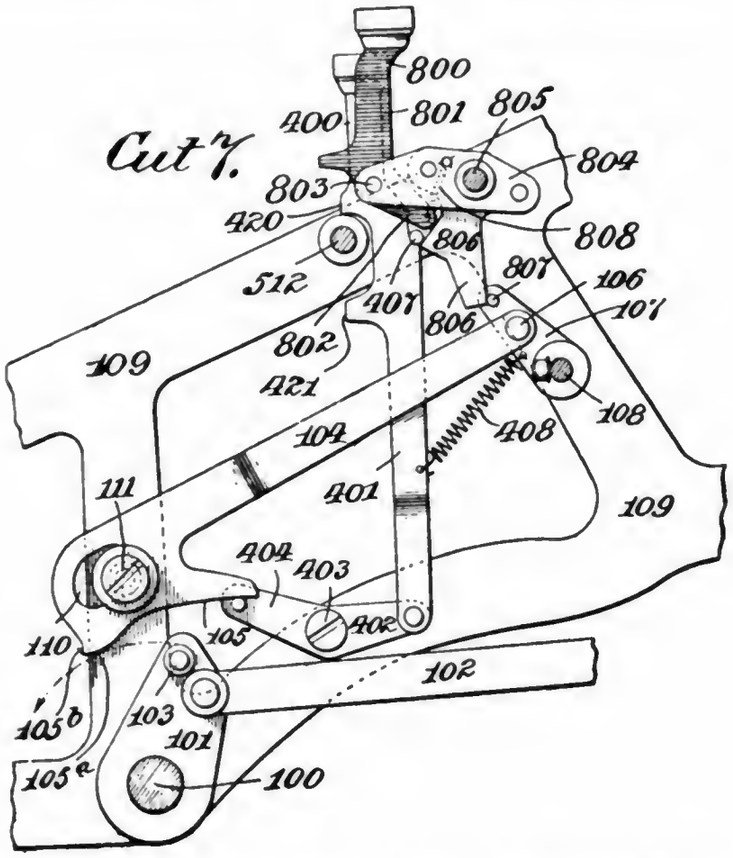

X-Q. 186. When the keys are released, by pressing the correcting key, this said push bar is moved to one position, and when the repeat key is depressed, to interrupt the action of the key releasing mechanism, this said push-bar is moved into another position, is it not?—these two different positions being respectively shown by the position of said part 104 in Cut 9 and in Cut 7.

A. When the keys are released by pressing the correcting key this push bar 104, although it is moved to one position, it performs no function, either while traveling to this position, or after it has reached it. It merely follows up the other parts of the key releasing device and, as I have stated before, is merely a part of the automatic key releasing mechanism. When the repeat key is depressed it does move this part 104 of the automatic key releasing mechanism into such a position that when the machine is actuated by the main handle its position causes the automatic key releasing mechanism to be interrupted. These two positions are respectively shown in the Cuts 9 and 7.

Deposition of Defendant's Witness, Charles N. McFarland, stipulated in from Massachusetts case.

New York, January 9, 1908.

Present, Witness and Counsel as before.

Cross-Examination Continued by Mr. Clarke.

X-Q. 187. In the Defendant's Machine, are there latch devices for individually latching the carrying levers back against the carrying tension of the carrying springs?

A. There are in the defendant's machine arms or levers carrying rolls which serve to latch or hold the carrying levers against the tension of their carrying springs in position for carrying.

X-Q. 188. Are there in the defendant's machine devices for moving the carrying levers back into this position where they are latched under the carrying tension of their springs, ready for carrying?

A. There are.

X-Q. 189. And when these setting devices have so moved the carrying levers back into latched position are said setting devices retracted partially immediately, so as to allow such levers as may be released from the latches to escape re-engagement with said latches?

A. This is true.

Cut 14.

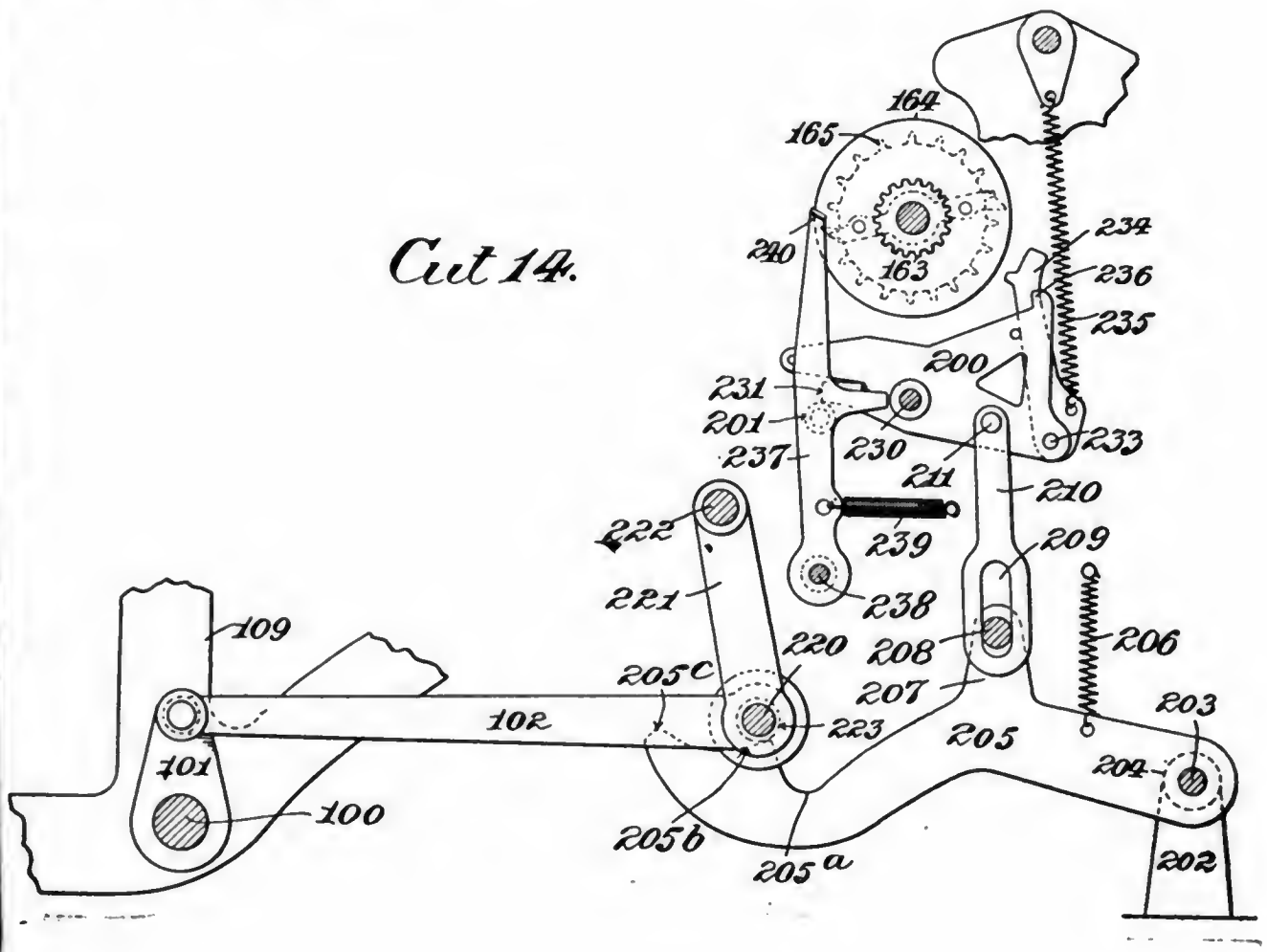

Deposition of Defendant's Witness, Charles N. McFarland, stipulated in from Massachusetts case.

Cut 15.

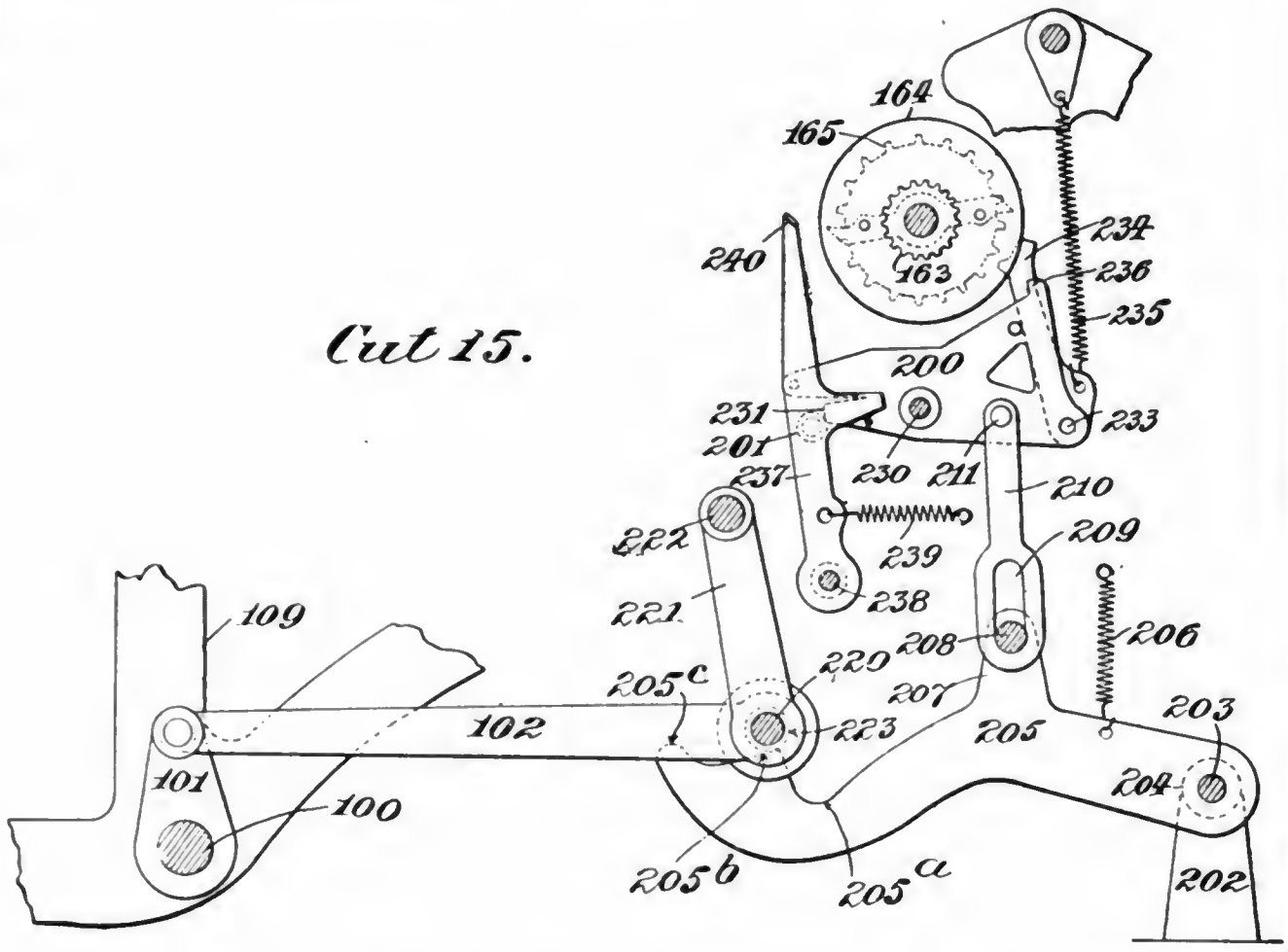

X-Q. 190. And is the actuation of these retracting devices a cam-controlled rocking movement?

A. The movement which actuates the devices for retracting the carrying levers is a swinging movement in a vertical direction and this vertical swinging movement is given to the arms, 205, shown in Cut 14 and Cut 15, by the rollers 223 swinging upon the shaft 222 rolling in contact with the upper cam edges of the arms 205. It might, therefore, be said that speaking of the immediate movement which retracts the carrying levers that it is cam controlled.

X-Q. 191. When did you first see any wide carriage adding machine and where?

A. I do not remember just when I saw the first wide carriage adding machine, but I believe that the first one which I saw was in the factory of the American Arithmometer Company in the building at 21st and Wash streets, St. Louis, Mo.

X-Q. 192. In what year?

Deposition of Defendant's Witness, Charles N. McFarland, stipulated in from Massachusetts case.

A. I do not remember the exact year. I believe that the wide carriage was put on the Burroughs Adding Machine some time after they moved into the 21st street shop. I do not remember the exact date of their removal into this shop, but it was after this that I saw the first one.

X-Q. 193. Did you first see this machine before or after you entered the employ of the American Arithmometer Company?

A. I think it was some time before.

X-Q. 194. But you do not remember when?

A. No, not exactly when.

X-Q. 195. Among the prior patents that you mentioned in discussing the Felt patent 628,176, which, if any, show side-by-side printing types adapted to act side-by-side to print a number having a plurality of places without any shifting of the paper between the printing of the successive figures in such number?

A. The arrangement described in the question exists in the two prior patents of Felt, namely, 465,255 and 568,-021, and also in the patent of Pike No. 595,864, the patent to Hiett No. 580,853. I find also the same arrangement described in the patents of Felt. No. 441,232 and 405,024. It is also present in the Burroughs patent 388,-119 and Garrett 401,780.

X-Q. 196. The Pike patent, the Hiett patent and the Garrett patent are the only ones prior to the Felt patent 628,176, that you know of, that show the side-by-side printing types and also a laterally movable paper carriage?

A. I do not understand what is meant by side-by-side printing types?

X-Q. 197. I mean types arranged side-by-side, so that they may print, either simultaneously or successively, without interference with each other, as contradistin-

Deposition of Defendant's Witness, Charles N. McFarland, stipulated in from Massachusetts case.

guished from type-heads arranged, as, for instance, in an ordinary typewriter, to swing into coincident printing positions, so that one typehead must get out of the way before another can print.

A. I believe that your statement in your previous question is true.

X-Q. 198. Is the contrivance of the Garrett patent one containing any sort of adding or calculating mechanism?

A. I cannot find any description of such mechanism in the patent, and I do not see any drawings of such a mechanism in the patent.

X-Q. 199. Is it the proposition of the Garrett patent that the operator shall depress a plurality of keys simultaneously, to print a word or part of a word, and that as he so depresses said keys the paper carriage shall be automatically forced a corresponding number of letter spaces to the side to present space on the paper for the printing of such plurality of letters as the operator finishes the down stroke of the keys'

A. On page 1 of the specification of the Garrett patent referred to, beginning at line 8, I find the following:

> "My invention relates to a machine of that class known as 'typewriters', and has for its object to provide a simple and efficient machine of this character by which whole words or phrases may be printed at once on the same line across a page and at a reporting speed by depressing keys of a key board conveniently arranged at the front of the instrument."

Again on page 3, of the specification, the following is to be found:

> "The key board keys are made alike in general form, except that they are successively made longer from the key 1 to the key 10 at their back parts behind the axis of the transverse shaft 1a, which supports them and the type sectors. The object of this successive rearward prolongation of the keys is to cause them to act with a varying leverage beneath and over a series of shoulders formed at the front

edge of a tilting plate, I, which I call the 'spacing plate', and by which and connected mechanism the feed of the carriage is regulated automatically, as hereinafter fully explained."

Deposition of Defendant's Witness, Charles N. McFarland, stipulated in from Massachusetts case.

Again on page 4 of the specification I find

"A ratchet wheel, R, on the shaft p' has peripheral teeth of suitable pitch, which are engaged in a pawl, R^2, which is pivoted at r to the spacing plate I and is guided and held upon the ratchet wheel by the engagement with it of the outer forked end r' of the lever R^3, which is pivoted by a long bearing pin, r^2, to the frame H. The ratchet and pawl are relatively arranged with the pinion P to cause the pinion to be turned to shift the carriage N from the right toward the left for variable distances or spaces to allow printing from one to ten characters on the paper, accordingly as the spacing plate I is lifted more or less by the back ends or stems of the depressed keys 1 to 10, and as the carriage is shifted from right to left the spring R' is coiled up or put in tension ready to automatically move the carriage back to its extreme right hand position when the detents are moved from the rachet wheel."

The above quotations from the specifications of the patent is a description of the proposition of the Garrett machine on the particular points recited in the question.

X-Q. 200. Referring to your consideration of Felt's patent 661,121 sued upon, do you know of any instance in the prior art of a two part type hammer in a printing mechanism so arranged that the part to which the spring power is applied is arrested and the other part of the hammer is allowed to continue its movement to strike the blow and then bound back slightly from the point of impact?

Counsel for defendant objects to the question as irrelevant. If the mechanism of the claims of the patent 661,121 sued on, is found in devices of the prior art, the use to which those devices is put is immaterial.

A. I do not know of any such instance.

Deposition of Defendant's Witness, Charles N. McFarland, stipulated in from Massachusetts case.

Re-direct Examination by Mr. Baird.

R-D. Q. Do you find in claims 37, 38, 39 or 40 of patent 661,121 sued upon, any element described as "a two part type hammer in a printing mechanism so arranged that the part to which the spring power is applied is arrested and the other part of the hammer allowed to continue its movement to strike the blow and then bound back slightly from the point of impact?"

A. I do not.

R-D. Q. In the patent 661,121, do you find such element answering to the description quoted above described and not claimed?

A. I find it described in the specification of this patent on page 5 beginning at line 57 and ending at line 72. It is not claimed in said patent.

R-D. Q. Referring to the Felt patent No. 465255, do you find described therein the combination mentioned in X-Q. 170 and which reads as follows:

> "A series of pawls, one for each hammer, adapted to selectively detain, from striking the types, the hammers in those orders where no figures are to be printed."

A. I do.

R-D. Q. Do you find it claimed anywhere among the 25 statements of claim therein contained?

A. do not.

R-D. Q. In the defendant's machine are there any selectively detaining pawls of any kind co-operating with the type hammers?

A. No.

R-D. Q. In answer to X-Q. 170 which called for a series of pawls you stated that there is to be found in the defendant's machine a series of intercepting hooks from which it might be inferred that said hooks have a

Deposition of Defendant's Witness, Charles N. McFarland, stipulated in from Massachusetts case.

function resembling that of pawls, is this the case, and if not, why not?

A. This is not the case, because the function of the intercepting hooks of the defendant's machine is quite different from that of the detaining hammer pawls of the Felt patent. The difference in function is this: In the Felt patent the detaining pawls detain the hammers against the action of the actuating springs of the hammers and immediately upon the release of the hammers by these detaining pawls the hammers are propelled in the direction of the type. The intercepting hooks of the defendant's machine do not detain the hammers against the propelling action of the hammer actuating springs but merely occupy a position which causes them to intercept the movement of the hammers after it has begun, through the release of the hammers by entirely separate and distinct mechanism. The pawls of the Felt patent are in contact with the hammers when they detain the hammers against the action of the springs, whereas in the defendant's machine these hooks are not in contact with the hammers while the hammers are being detained against the action of their actuating springs. This is the reason why these parts are called hooks and not pawls.

R-D. Q. Assuming for the purpose of the argument that the hammer pawls of the Felt patent 465255 are the equivalent in form and construction of the intercepting hooks of the defendant's machine, do you find in this Felt patent the combination of elements set out in X-Q. 172 as follows:

> "A series of separte devices for selectively displacing such of these intercepting hooks as are not desired to intercept their corresponding hammers, so that in the orders where said hooks are so displaced the hammers are released or relieved from such intercepting action and duly strike their type to print the required figures."

and if you do not find such combination, state why not?

Deposition of Defendant's Witness, Charles N. McFarland, stipulated in from Massachusetts case.

By Mr. CLARKE: Objected to as leading and as not proper re-direct examination.

A. I do not find that this combination in the Felt patent for the following reason: If the conditions stated in the question were present in the machine of the Felt patent, it would not be an operative mechanism, because the construction of the hammers and other mechanism connected therewith necessitates the use of a pawl which will detain the hammers against the tension of their actuating spring.

R-D. Q. Do you find in any of the statements of claim of the Felt patent 465255 the combination of elements which I have in my last question quoted from X-Q. 172?

A. I do not find the term "selectively displacing" in any of the claims.

R-D. Q. Do you find in any of these claims the expression "selectively detaining" as applied to the devices which prevent the movement of the hammers in the Felt device?

A. I do not.

R-D. Q. Do you find in the Felt patent 465255 any description of the following combination of elements mentioned in X-Q. 177 as follows:

> "Devices for displacing, into non-intercepting position, all the hammer hooks to the right of the one that is lifted to allow a digit to be printed in any of the higher orders of the machine, so that such displacement of hammer hooks of the lower order or orders will permit zeros to be recorded automatically in all the proper lower places of the number to be printed"

and if not, why not?

A. I do not find such combination described anywhere in the Felt patent, because there is nowhere in the patent described any non-intercepting hooks. There are described detaining devices for the hammers, the difference between the two kinds of devices being that a de-

Deposition of Defendant's Witness, Charles N. McFarland, stipulated in from Massachusetts case.

taining device detains something from movement, whereas an intercepting device intercepts it after movement has already begun.

R-D. Q. Do you find in any of the claims of patent 465255 the combination of elements quoted in my last question from X-Q. 177?

A. I do not.

R-D. Q. Do you find in the Felt patent No. 465255 anywhere a description of the following combination set out in X-Q. 179, namely.

> "Hammer pawls or hammer hooks with such overlapping pins or arms adapted to so displace the hammer pawls or hammer hooks of lower order as to permit the hammers to effect the printing of the zeros normally presented to the printing line by the typeholders of such lower order."

A. I do find substantially this combination described in the Felt patent provided the term "hammer hooks" is omitted.

R-D. Q. Do you find it anywhere set out in any of the claims of this patent 465255 with the words "hammer hooks" omitted? A. I do not.

R-D. Q. Referring to the machine of the Wythe patent do you see any substantial difference between the manner in which the actuating springs of the carrying devices are stored in energy in that machine and in the Felt machine which is the subject-matter of the Felt patent 465255, or 568021?

A. I do not see that there is any substantial difference.

R-D. Q. In the Wythe machine what energizes the actuating springs of the carrying mechanism?

A. The same mechanism which retracts the carrying lever into position for carrying.

R-D. Q. What does it in the Felt machine?

A. In the Felt machine the same condition exists, that is, the mechanism which retracts the carrying levers into

Deposition of Defendant's Witness, Charles N. McFarland, stipulated in from Massachusetts case.

position for carrying also stores the energy in the carrying springs. The only difference in the two machines is that the time during which the energy is stored in the spring is not the same, with reference to the retraction of the levers into position for carrying.

R-D. Q. In what manner would the Wythe machine have to be changed in order that the actuating springs of the carrying mechanism should be energized by retracting the carrying devices against the tension of their actuating springs?

A. Referring to Figure 6 of the Wythe patent, it seems to me that all that would be necessary to do in order to have the energizing of the carrying springs p4 to take place at the same time that the levers are retracted into position would be to disconnect the upper end of this spring upon the moving parts of the retracting mechanism and fasten it to some stationary part of the machine.

R-D. Q. Referring to X-Q. 130 and your answer thereto, is it your opinion that the device of the Wythe patent is inoperative because of the fact that the resistance due to the friction pawl j is required to be overcome by the energy of the carrying springs p4?

A. I do not believe that the conditions named would render the device of the patent inoperative.

R-D. Q. Referring to X-Q. 90, what is the function of the hand lever at the side of the Felt machine by the actuation of which power is stored in the carrying springs?

A. This lever is designated on the drawings of the patent No. 40 and may be clearly seen attached to the side of the machine in Figures 1, 2, 4 and 6. It is referred to in the description of the patent on page 2, line 104, and following. Its function is that of moving the paper and returning the recording hammers into position for printing.

Deposition of Defendant's Witness, Charles N. McFarland, stipulated in from Massachusetts case.

R-D. Q. In addition to this hand lever referred to in the last question, there is another hand lever in the machine of that patent 465255 which is adapted to vibrate the main shaft, is there not?

A. No.

R-D. Q. How are the numeral wheels actuated in the machine of that patent?

A. By the depression of the numeral key.

R-D. Q. Referring to X-Q. 71, do you find described in the Felt patent 465255 the following combination mentioned in that question, namely:

> "A series of separate carrying devices for these numeral wheels, so that each may independently respond to an impulse from either such carrying device or such rack bar actuating mechanism 160 according as either a ten is to be carried from the wheel of next lower order, or a digit, determined by a key in its own order, is to be accumulated by the given numeral wheel"?

A. Yes, I believe that the combination described is to be found in the Felt machine if the designation 160 in the combination is omitted.

R-D. Q. Assuming this designation "160" to be omitted in the combination stated, do you find such combination set out in any of the statements of claim of the Felt patent 465255?

A. I do not find the stated combination set out in any of the claims of the patent.

R-D. Q. In your answer to X-Q. 76 you stated that in the defendant's machine the carrying operation was deferred until after the rotation of the numeral wheel due to accumulation. The remainder of the answer after that statement appears to me to be unintelligible, either by the omission of some statement, or a fault in grammar, or a mistake in transcribing, and I should like to have you state again how this carrying operation is deferred.

A. The carrying operation is deferred after the rota-

Deposition of Defendant's Witness, Charles N. McFarland, stipulated in from Massachusetts case.

tion of the numeral wheel due to accumulation by the contact of the roller 223 in its movement toward the right or back of the machine upon the surface 205b of the arm 205. By the time the rollers 223 have reached the end of the cam surface 205b the racks 160 have completed their actuation of the numeral wheels and further movement of the rollers 223 towards the back of the machine allows the arms 205, under the tension of their springs 206, as well as the carrying springs 235, which have been selected to act in carrying to move upward swinging on their pivots 203 and through the movement upward with the arms 205 of the shaft 208, the links 210 and the levers 200, the numeral wheels are actuated in the carrying operation.

The signature of the witness and the certificate of the officers waived by consent of counsel.

IN THE SUPREME COURT OF THE DISTRICT OF COLUMBIA.

Comptograph Company,
Plaintiff,
vs.
Adder Machine Company,
Defendant.
} In Equity, No. 29,220.

Deposition of Defendant's Witness, Robert Magrane.

Testimony taken on behalf of the defendant in the above entitled cause, pursuant to agreement, at the offices of Messrs. Kerr, Page, Cooper & Hayward, Room 2905, Singer Building, 149 Broadway, New York, N. Y., commencing at 10:30 A. M. on Thursday, May 18, 1911, before M. Lawson Dyer, a notary public duly qualified.

The testimony is taken pursuant to a stipulation of counsel in the prior suit between the same parties in the United States Circuit Court, District of Massachusetts, in Chancery No. 325, to wit:

That the testimony in this cause may be taken orally under the 67th Rule in Equity, as amended, before any notary public, with the same force and effect as though such notary had been appointed by the court a special examiner.

Further, that uncertified copies of the specifications of patents may be used and offered in evidence with the same force and effect as original copies, subject to correction if desired by either party by the production of original or certified copies.

Further, that all exhibits offered in evidence may be retained in the possession of the respective counsel until the final hearing, subject, however, to the examination by respective counsel as may be desired, and the production when requested upon the taking of testimony by either party, and to be filed in court at any time upon the written request of counsel for either party.

Further, that the Comptograph Company, complainant herein, is a corporation duly organized and existing under and by virtue of the laws of the State of Illinois; and that the Adder Machine Company, defendant herein, is a corporation duly or-

Deposition of Defendant's Witness, Robert Magrane.

ganized and existing under and by virtue of the laws of the State of Pennsylvania.

Further, that each of the patents here sued upon and the inventions therein set forth were duly assigned, and the assignments thereof duly recorded, to the Felt & Tarrant Mfg. Co., a corporation of the State of Illinois, by the patentee Dorr E. Felt, of Chicago, Illinois, prior to the assignment of each of all of said patents by the Felt & Tarrant Mfg. Co. to the Comptograph Company; and that the Comptograph Company now holds the full title to each of said patents, under due assignment of record, and has held such title since the date of said assignment, the 12th day of May, A. D. 1902.

Present: Henry Love Clarke, Esq., for complainant; and Drury W. Cooper, Esq., and S. S. Dunham, Esq., for defendant.

ROBERT MAGRANE, a witness produced on behalf of the defendant, being first duly sworn, deposes as follows in answer to interrogatories of counsel:

Q. 1. Please state your name, age, residence and occupation?

A. Robert Magrane; 38 years old; 230 Pierce street, Kingston, County Luzerne, State of Pennsylvania; occupation, attorney.

Q. 2. Please state what education and experience you have had which qualifies you to testify in an action relating to letters patent, particularly letters patent relating to mechanical matters, and especially calculating machines and the like?

A. I have had three years' experience in machine shop work of a general character. I took the four-year technical course at Pratt Institute, Brooklyn, N. Y., spent six years at Harvard University, taking two degrees; one year at George Washington University, Washington, D. C., taking the degree of master of patent law; am a member of the bar of the State of New York and

Deposition of Defendant's Witness, Robert Magrane.

worked in the Patent Office as an assistant examiner for about two years in the division which examined calculating machines. During this time I had under my care all applications for patents relating to recorders, fare registers, and for a part of the time also the class of change makers, the class of voting machines and various classes of cash registers, registers and computing machines. For the past two years I have specialized almost exclusively in calculating machines; in the soliciting and prosecuting of applications for letters patent on machines of this character. During my work in the United States Patent Office I was more or less familiar with some 3,000 patents in this art, and since I left the government service I have gone over as many more.

Q. 3. Have you read the patents in suit, to wit: the patents of Dorr E. Felt, Nos. 568,021, 628,176 and 661,121, and do you understand the same?

A. I have read these patents, and do understand them.

Q. 4. Have you made any investigation of the prior art as exhibited in prior patents and publications relating to calculating machines and the like, with particular reference to claims 21, 47, 48, 49 and 52 of Felt patent 568,021, and claims 37, 38, 39 and 40 of Felt patent 661,-121, and if so, will you please state the results of such investigation and your conclusions as to the relation of the said claims to the prior art and to the defendant's machine?

A. I have made such an investigation.

In the computing machine art there are more than 30 different types of machines, but for the purposes of this case only two of these classes need to be considered.

In order to determine just what the claims here involved mean, it is necessary to consider each of these classes at some length, and I will take up first the char-

Deposition of Defendant's Witness, Robert Magrane.

acteristics which they possess in common, and then the differences in the two classes.

Each of these machines is equipped with rows of keys in the form of vertical banks, so-called, each bank having 9 keys bearing the digits from 1 to 9, respectively. At one end of each of these banks is a numeral wheel bearing corresponding digits and also a zero character. When any key in any row is depressed the mechanism is adapted to cause the related numeral wheel to rotate to a corresponding degree and show the corresponding digit through a sight opening in the machine. By means of this mechanism any desired number can be represented on the numeral wheels by depression of the proper keys on the key board.

These numeral wheels constitute a register, and are adapted to add or accumulate any series of numbers which are put into the machine by the manipulation of the key board.

As in the ordinary process of addition, these registers must be equipped with mechanism for carrying from one wheel to another. Such mechanism is usually known as transfer or carrying devices.

It is obvious that all of the intermediate numeral wheels constituting this register must be adapted to be actuated by two distinct and independent trains of mechanism. The first of these is the movement of the wheel due to the manipulation of the corresponding bank of keys; the second is the movement of the wheel due to the numeral wheel of next lower order passing from the ninth to the zero position. For the purpose of conveniently distinguishing between these two means of actuating any intermediate numeral wheel, I shall call the first means the primary actuating mechanism, and the second means the secondary actuating mechanism.

The two groups of machines mentioned above have all

Deposition of Defendant's Witness, Robert Magrane.

of these characteristics in common. The fundamental distinction between the two resides wholly in the application of power to work the machine. In one case the movement of parts is caused directly by the depression of the keys; in the other case the keys are depressed without doing any work and power is applied to the machine by means of a crank or other attachment which moves the registering devices, the movement being controlled by the particular keys set up on the key board. The first type of machine is known technically as a *key operated machine;* the second type as a *key set machine.*

It might be well to state here that considerable energy is required to manipulate either of these machines. The numeral wheels must be rotated to the proper extent; mechanism must be moved into position to check the momentum acquired by this rotation; the carrying or transfer mechanism must be actuated at frequent intervals, and the various parts restored to their original position. When the machine is adapted to print or list the items as well as to accumulate them, still further power is required. The printing types corresponding with the depressed keys must be moved into position for printing; the printing mechanism must be actuated; the paper must be spaced line by line; and the ink ribbon moved after each impression. I have here enumerated eight essential functions which must be performed in an operative adding and listing machine, each one of which requires a certain amount of power.

Coming now to the consideration of specific patents of the prior art, I will take up first the early work of Mr. Felt. Mr. Felt was one of the early workers in machines of the key operated type. The great problem in the development of machines of this type was to keep the keys from being too heavily loaded in the performance of all of the functions detailed above. It will be noticed in

Deposition of Defendant's Witness, Robert Magrane.

the patents of Mr. Felt now to be taken up for consideration the principal effort of invention was directed to lessening the load on the keys of his machine.

Mr. Felt's first patent in this art, No. 366,945, was granted upon an application filed in 1886. This machine had no printing attachment. All of the movements of the numeral wheels, both by the primary and secondary actuaters, were due to power derived from the operation of the keys.

In 1888 Mr. Felt filed his first application for a machine which included printing mechanism. The power required to manipulate this machine was too great to be derived from the actuation of the keys alone. In this patent consequently we find that the hammer printing mechanism is actuated by means of an auxiliary spring motor, and that the movement of the paper and the movement of the ink ribbon were both caused by power derived from the depression of a special key. In this machine the burden on the keys includes the movement of the numeral wheel, the movement of the overthrow preventers to check their momentum, the movement of the carrying mechanism, the movement of the type into printing position and the movement of an escapement to release the spring motor to cause the printing mechanism to function.

In the year 1889 Felt filed another application which subsequently issued as patent No. 441,232, in which another attempt is made to lighten the load on the machines. Apparently the spring motor proved unsatisfactory, for its use was abandoned and never subsequently revived by Mr. Felt. In this patent, therefore, the actual work of printing had to be thrown back upon the keys, and the result was that the load upon the keys was greater than in the previous machine.

In patent No. 441,233, which was filed the same year, Mr. Felt succeeded in reducing the power required to

Deposition of Defendant's Witness, Robert Magrane.

move the keys by adding a side lever to the machine which was operated by hand. The work of spacing the paper, of moving the ink ribbon and of cocking the printing mechanism was all put upon this lever.

The part of the mechanism now actuated directly by the keys which absorbed the greatest amount of power was the carrying device. The carrying mechanism between each of the adjacent numeral wheels includes a carrying pawl driven by an individual spring. The carrying must be done in a small fraction of a second so that a powerful spring is required. The greater part of the power necessary to depress the keys was utilized in the winding up of this spring, as the carrying device is necessarily actuated upon each complete rotation of the associated numeral wheels.

A logical step at this point was to take this load from the keys and wind these respective individual springs by suitable mechanism connected with the handle. Such mechanism as this is found in Felt's succeeding patent No. 465,255, the application for which was filed in 1890. In this patent the lever at the side of the machine not only furnishes the power to move the paper, the ink ribbon and the printing mechanism, but it also winds up the carrying springs. It will be noticed that the series of patents above cited show a steady progressive development of the key actuating machine, in which the various functions performed directly by the power applied to the keys are subsequently performed by power derived from the handle. The actual work performed by the keys in the last patent cited is very small. If this particular load is taken off from these keys and is carried by the operating handle we have a machine of the second type, a key set machine. This step was taken by Felt in patent No. 568,021, filed in 1895.

It should be noticed that the patents cited above cover

Deposition of Defendant's Witness, Robert Magrane.

a period of about ten years and that this period marks the development of the key actuated machine to its fullest possibilities and ends in 1895 with the abandonment of the key actuated machine and the adoption of the key set principle.

At this point Mr. Felt was more than ten years behind time in the development of machines of the key set type. The first machine embodying the key set principle was disclosed in an application filed in 1885 by William S. Burroughs, which resulted in patent No. 388,116. Mr. Burroughs was the pioneer of this type of machine. At the very beginning of his work he realized the necessity of having an easily movable key, and in the various types of machines which he designed this principle is rigidly adhered to. Typical examples of the early machines of Burroughs are shown in patents No. 388,118, filed in 1886, and No. 504,963, filed in 1892.

I have already spoken of the chief difference between the key actuated and the key set types of machine, that it consists mainly in the application of power to work the machine. There is also a further fundamental difference between the two machines arising out of the difference in the methods of manipulating the respective keys.

In a key set machine the desired keys are depressed and remain automatically in a depressed condition until the handle of the machine is moved. The movement of the handle performs the various functions of adding and printing described above, and after the mechanism has taken the reading from the depressed keys it automatically restores them to their original elevated position. It is obvious that this restoration is necessary in order that subsequent numbers can be set up on the keyboard.

In the key actuated type of machine there is no such mechanism. The key is depressed by the finger and rises to its normal elevated position as soon as the finger is

Deposition of Defendant's Witness, Robert Magrane.

withdrawn, in the same manner as the key of a typewriter, so that the keys are neither locked in a depressed condition nor are they released automatically from such a position.

The key set machine is also distinctive in that it permits the correction of errors before the wrong number is put into the register. In the key operated machine the numeral wheels are actuated in synchronism with the movement of the keys. As explained above, in a key set machine, the number is set up on the keyboard by depressing the keys, which remain locked in a depressed condition. No movement of the numeral wheels takes place, however, until the subsequent movement of the operating handle. If the operator, after setting up the number on the keyboard, sees that he has made an error, by releasing the lock on the depressed keys he can restore the keyboard to its normal position, and then set up the correct amount. The locks that hold the keys in a depressed condition are removed by means of a simple mechanism connected with a so-called *error key*.

There is a third difference between these two machines. In a key operated machine if it be desired to repeat a number the corresponding keys must be depressed as many times as the number is to be repeated. On the other hand, in a key set machine, it is obvious that if the keys be not automatically restored to their elevated position after an operation of the machine, the same number represented by the depressed keys will be repeated upon each subsequent movement of the operating handle. It only remains, therefore, to disable the automatic key restoring means to have an arrangement whereby a number may be repeated as often as desired without any manipulation of the keys. The mechanism adapted to a special key which is called the repeat key.

Summing up these characteristics peculiar to the key

Deposition of Defendant's Witness, Robert Magrane.

set type of machine, there is first the means for automatically releasing the depressed keys; second, the error key controlling mechanism for manually releasing the depressed keys; and a third repeat key controlling mechanism for disabling the automatic release of a depressed key.

When, in 1895, Mr. Felt abandoned the key actuated machine and constructed his first key set machine it may be possible that he thought he had added these functions to the keyboard for the first time, but as a matter of fact the Burroughs structure of ten years earlier in date discloses one or more of these, and the Burrough machine of 1892 as disclosed in patent 504,963, includes all three of these mechanisms.

Referring now to Burroughs patent 388,118, which discloses one of the earlier key set machines ante-dating Mr. Felt's work by about ten years, the keys are shown at D in Figs. 1 and 4. Each key as shown in Fig. 4 has a key stem a^6, which normally rests upon a bell crank a^5, pivoted at a^4. This bell crank may assume either one of two positions corresponding with the elevation or depression of the key D. It is held in either of its positions by a friction spring a^7. Each of the lower arms of the bell crank in any vertical bank projects into a slot in a sliding plate D^4. When any one of these keys is depressed the bell crank is rocked and the plate D^4 is moved to the left, as shown in Fig. 4. Referring now to Fig. 12, a rocking lever f^2, is pivoted at D^5. The upper extremity of the lever f' carries a bail e, which, when moved to the right, as viewed in Fig. 12, contacts with the bent edge e^2 of the sliding plate D^4 and is adapted to restore it to its original position. This movement of D^4 moves the bell crank a^5 to its original position and elevates the key. The pair of arms f^2 which carry the bail e are moved automatically by the following mechanism: To

Deposition of Defendant's Witness, Robert Magrane.

the lower part of one of the arms is pivoted a pawl D^6, the nose e^3 of which is adapted to engage a roller e^6 mounted on the lever E fixed to shaft C. The rocking of the shaft C in the operation of the handle communicates motion to the above described lever at the proper time and causes all of the slides D^4 to restore the keys to their elevated position. This mechanism constitutes the automatic key release.

The error key mechanism is shown in Figs 5 and 12. V is the error key, the stem of which bears upon a bell crank W′ pivoted at c^7. To the depending arm of the bell crank is attached a rod w^2. As shown in Fig. 12, this rod w^2 hooks over the upper part of the release f'. When this key is depressed the bail above described is moved to the right and the keys are released as before. This constitutes the manual releasing mechanism.

All three of the above described mechanisms are shown in Burroughs patent No. 504,963. Owing to the complicated drawings forming the disclosure in this patent, it is more convenient to refer to some prepared drawings, in which the mechanisms in question have been reproduced from the patent drawings and the immaterial parts of the structure omitted for the sake of clearness.

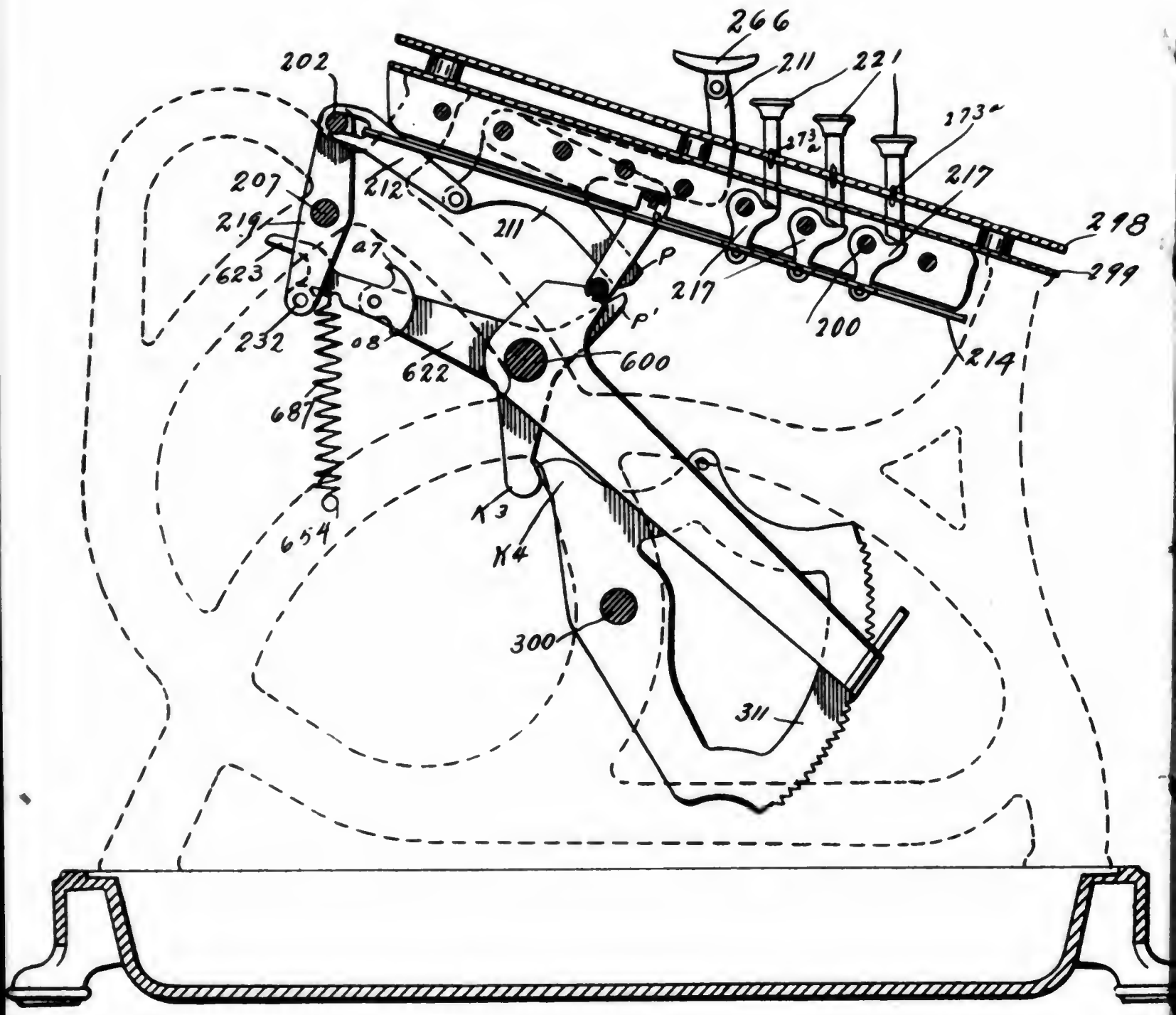
266
211
221
202
273a
273a
217
207
212
211
298
219
a7
P
299
623
217
P'
200
232
08
600
214
622
687
K3
654
K4
300
311

Fig. 1

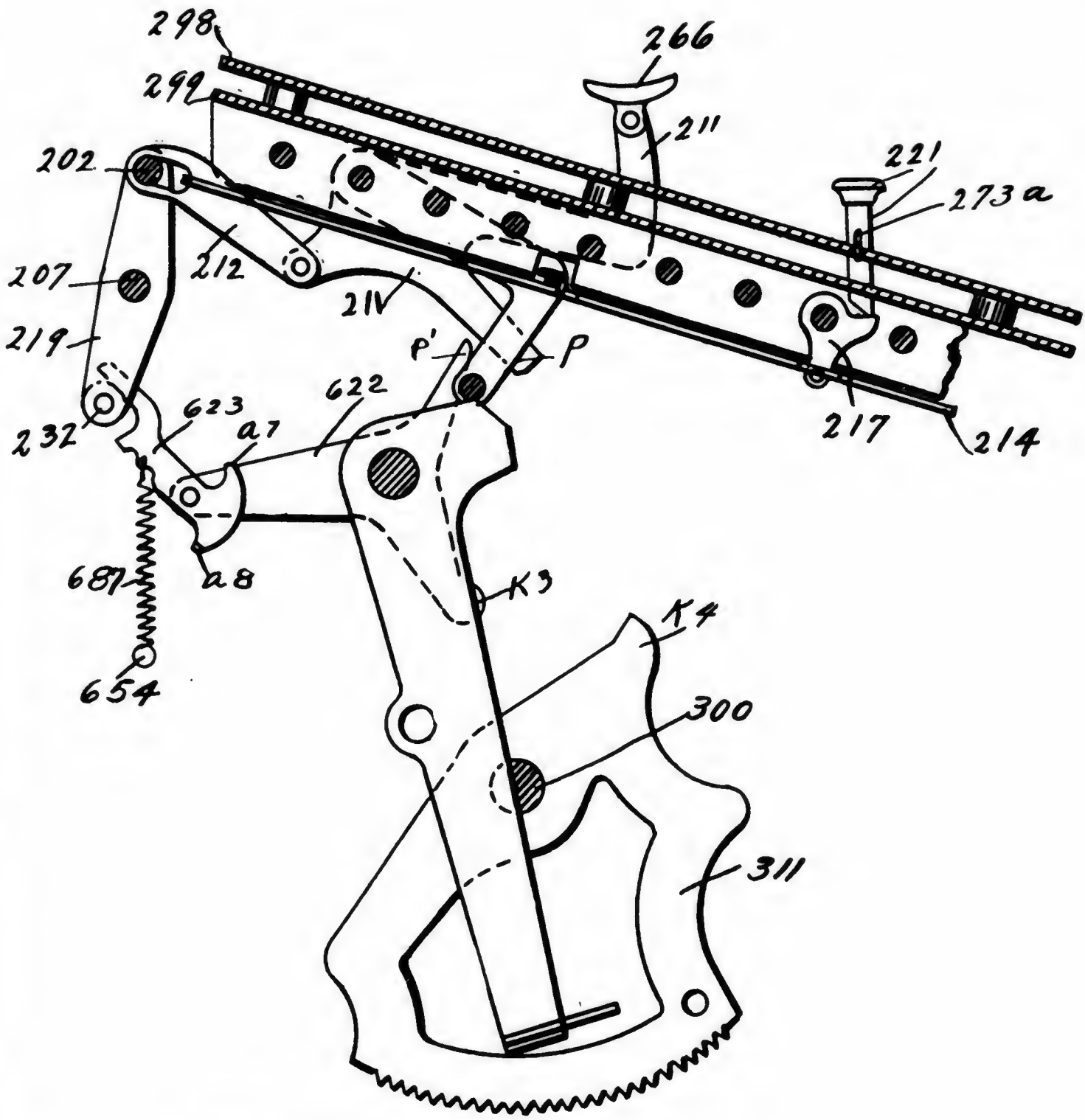
298
299
266
211
202
221
273a
207
212
211
219
P'
P
622
623
232
a7
217
214
687
a8
K3
K4
654
300
311

Fig. 2

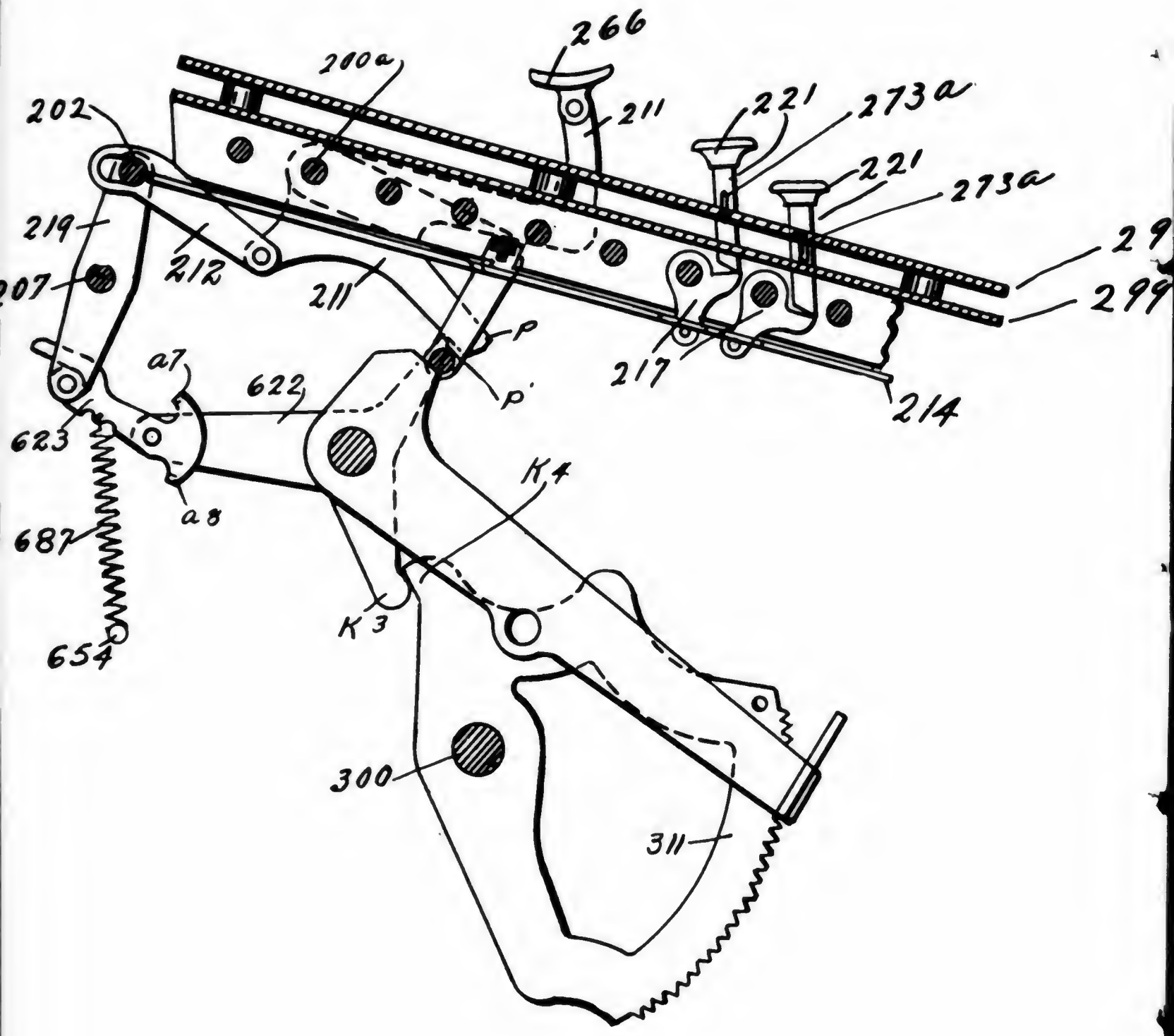
266
200a
202
211
221
273a
221
273a
219
212
211
29
299
207
P
217
214
a7
622
P'
623
K4
a8
687
K3
654
300
311

Fig. 3

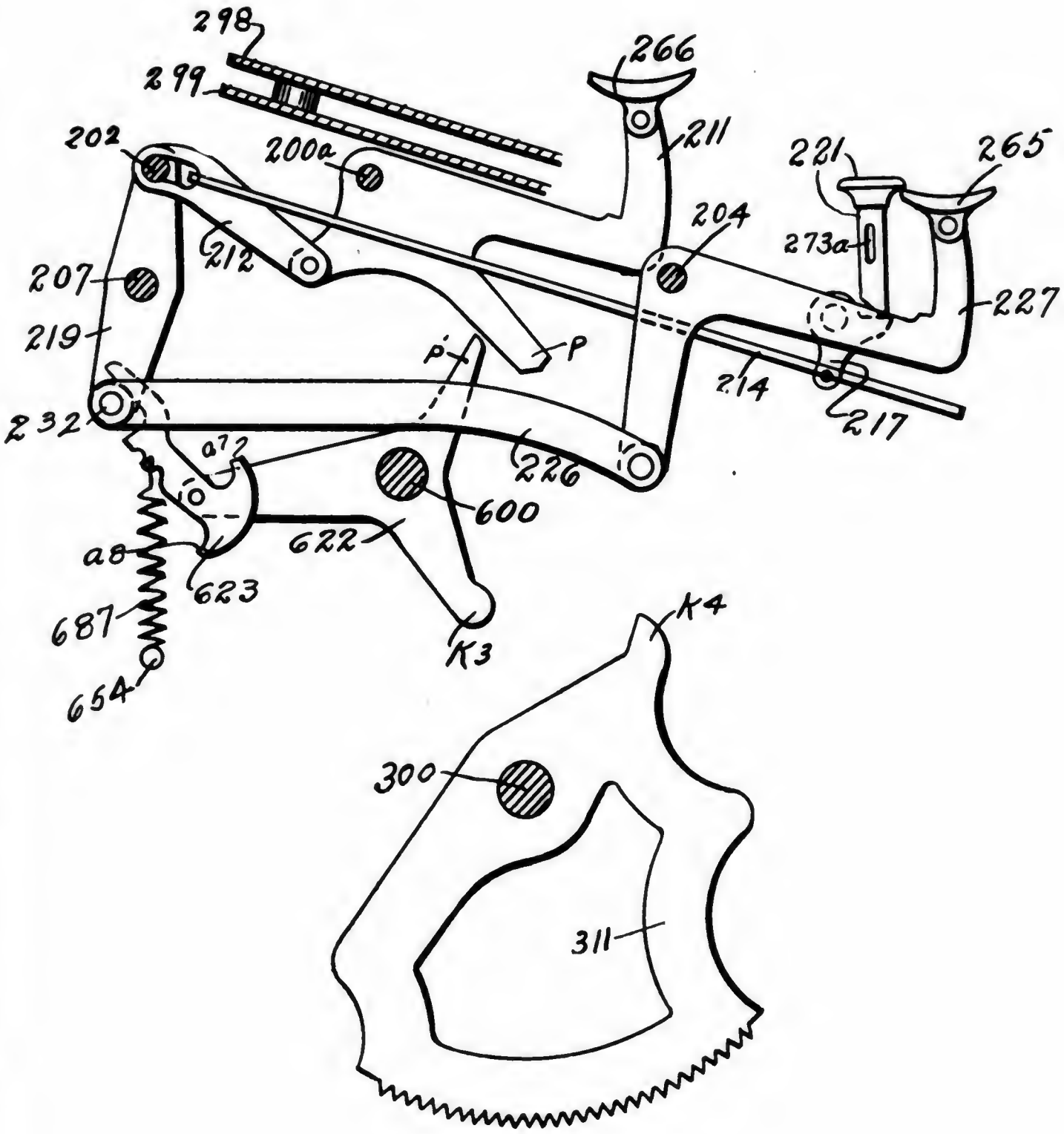
298
299
266
211
202
200a
221
265
204
273a
212
207
227
219
P'
P
214
232
217
a72
226
600
622
a8
623
687
654
K3
K4
300
311

Fig. 4

Deposition of Defendant's Witness, Robert Magrane.

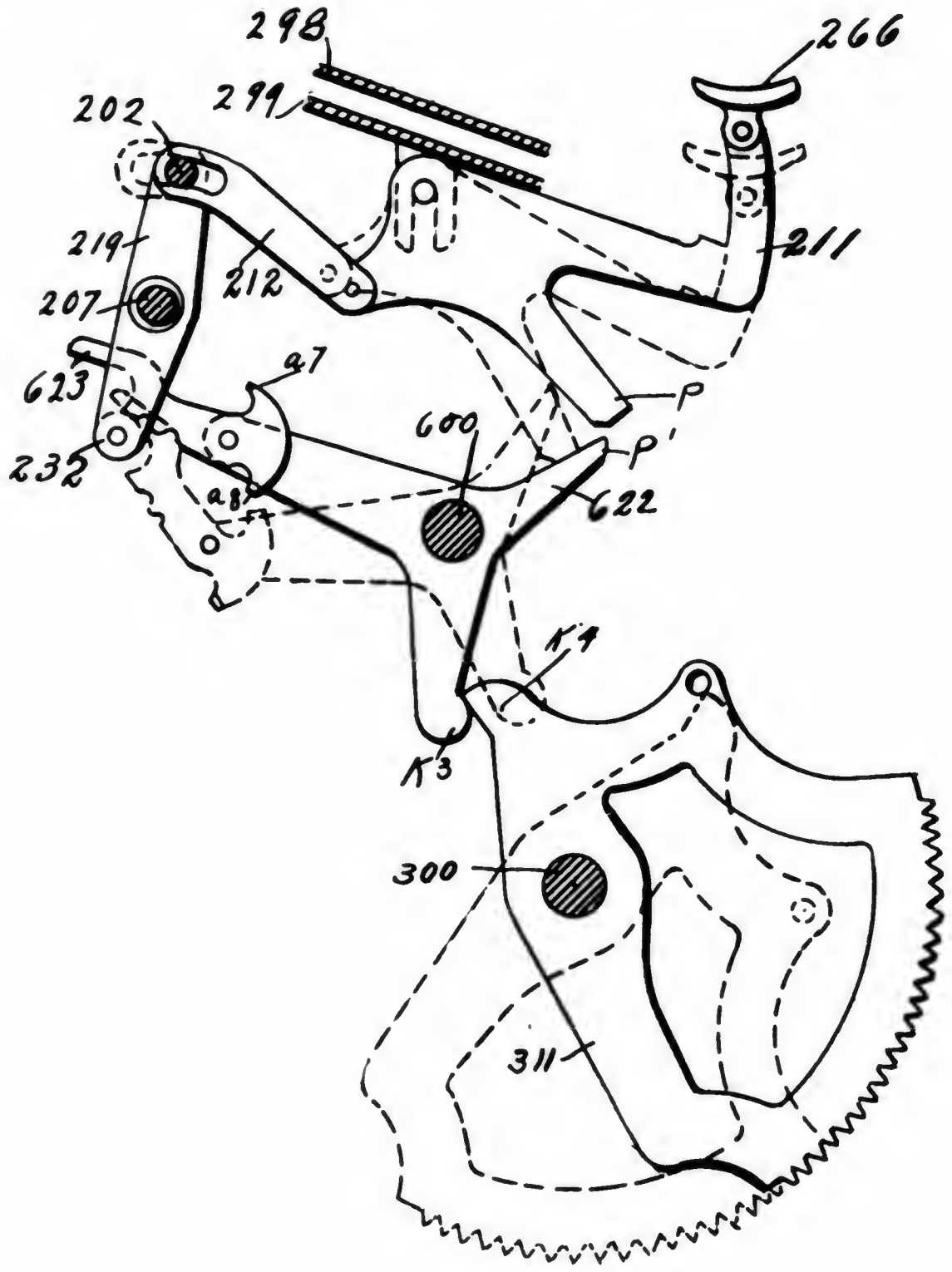

Fig. 5

In these drawings the keys are shown at 221, the bell cranks at 217 pivoted at 200, the slotted rod at 214, the bail at 202 carried by two side arms 219 pivoted at 207. The structure so far described is identical with the mechanism of the earlier patent to Burroughs. The balance of the mechanism for automatically releasing the keys consists of an arm 622 pivoted loosely upon shaft 600 and provided with a depending projection K^3, to which mo-

Deposition of Defendant's Witness, Robert Magrane.

tion is communicated by nose K^4 forming a part of a segment 311, which rocks with shaft 300. The arm 622 a roller 232 located at the lower extremity of one of the side levers 219. The arm 622 is normally drawn downward by a spring 687. Fig. 1 shows the position of these parts when the machine is at rest. Fig. 2 shows the machine when the forward stroke of the operating handle has been completed. Fig. 3 shows the machine with the operating handle part way home on the return stroke, and the parts positioned to effect the release of the keys, the bail 202 about to be forced to the right by the straightening of the toggle link formed by arm 622 and pawl 623.

The mechanism for manually releasing the keys by means of the error key is shown in Fig. 4. The error key is shown at 265 attached to a bell crank 227, pivoted at 204, to the lower arm of which is attached a link 226 connected with the lower extremity of the side lever 219. An inspection of this figure will show that when this key is depressed the bail 202 will be rocked to the right, moving the bars 214 and thereby elevating the depressed key.

The mechanism constituting the repeat key is shown in Fig. 5, which is a copy of Fig. 11 of the Burroughs patent. The repeat key is shown at 266, and is provided at its rear end with a link 212 having a slotted connection with the bail 202. It is also provided with a depending lug *t* which, when the key is depressed, is adapted to intercept the path of an upstanding lug *p'* forming a part of the lever 622. When this key is depressed the lever 622 is held locked in its upward position against the tension of the spring 687. In this position of the parts the rocking of the segment 311 with the shaft 300 cannot communicate any motion to the arm 622. The automatic key releasing means is in this way disabled.

It will be noticed that the lever 622 has two different

Deposition of Defendant's Witness, Robert Magrane.

positions depending upon whether or not the key 266 is depressed. When the key is depressed the lever is inactive and performs no function. When the key is elevated the lever is in its operative position and will automatically effect the release of the depressed keys.

The defendant's machine is a machine of the same general character of the Burroughs, being of the key set type. All of the three functions above described are features of this machine. The mechanism for performing these functions varies only to a slight extent from the Burroughs structure described above. The Wales mechanism is disclosed in six cuts now in evidence, which are here identified as cuts numbered from 6 to 11, inclu-

Cut 8.

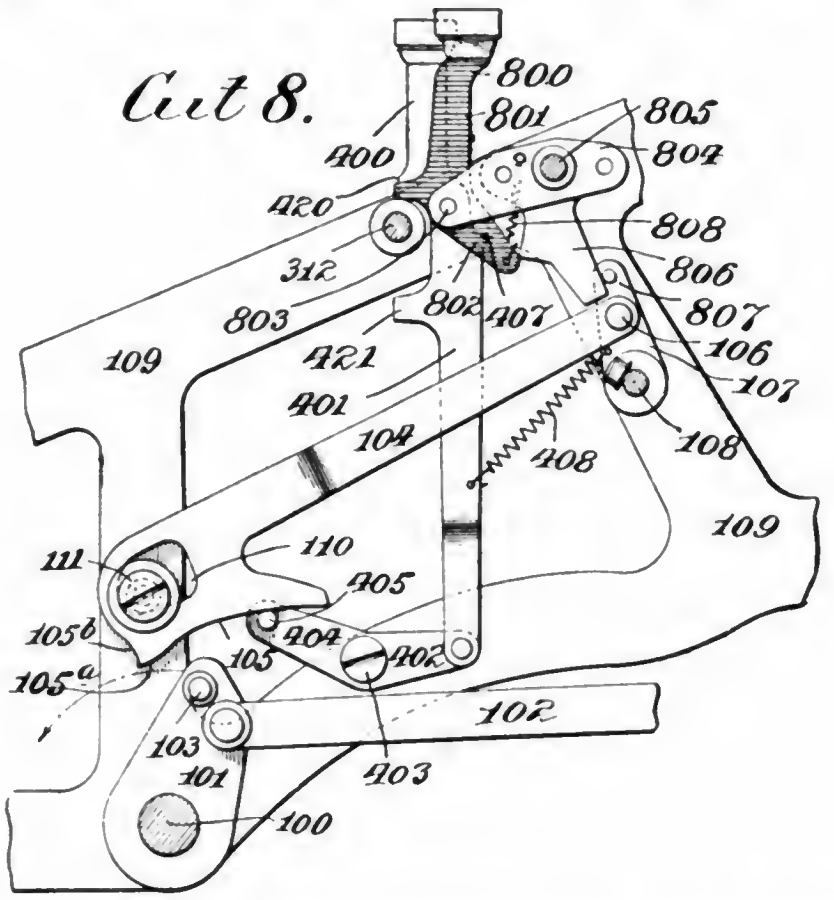

sive. In describing the operation of this mechanism it is not necessary to go into further detail at this time than to state that a slight rocking of the shaft 108 shown in these cuts will effect the release of any depressed key in the machine. The automatic release of the keys by this mechanism is effected by means of a crank 107 attached to the rock shaft 108, normally drawn to the left by a spring 408 and moved toward the right by thrust bar 104

Deposition of Defendant's Witness, Robert Magrane.

pivoted at 106 to the crank. The lower end of this bar 104 is loosely held in position by a stud 111 attached to the side frame. The lower edge of this thrust bar is provided with two cam surfaces 105*a* and 105*b*. One of the main rock shafts of the machine is shown at 100, and is provided with a crank 101 bearing a friction roller 103 adapted to contact with the cam surfaces on the thrust rod 104. As shown in the cuts, the anticlock-wise motion of the crank 101 simply lifts the lower end of the thrust bar without transmitting any movement to the crank 107. On the reverse movement, however, the roller 103 contacts with the shoulder 105^b and moves the thrust bar endwise, thereby rocking the crank 107 and shaft 108, thus effecting the automatic release of the keys through the movement of this shaft.

The error key 801 is shown shaded in these cuts. When this key is depressed, as is obvious from these drawings, the part 806 is moved to the right against pin 807 mounted upon crank 107, thereby rocking the shaft 108 and manually releasing the depressed key.

The repeat key is shown at 400 and includes a stem 401 pivoted to a lever 402 which is swiveled to the frame at 403. The other end of this lever 404 carries a pin 405 which is normally adapted to raise the lower end of the thrust bar 104 out of the path of the roller 103 whenever the repeat key is depressed, as will be obvious from an inspection of the figures.

As in the case of the corresponding lever 622 of the Burroughs structure, this thrust bar 104 has two different positions depending upon whether or not the key 400 is depressed. When the key is depressed the bar is inactive and performs no function. When the key is elevated the lever is in its operative position and will automatically effect the release of the depressed key.

The claim directed to this particular mechanism and

Deposition of Defendant's Witness, Robert Magrane.

here sued upon is claim 21 of patent 568,021. It reads as follows:

> "21. The combination with the key releasing mechanism, of a hand lever E and mechanism connecting it to said releasing mechanism, said lever being movable to one position for operating the releasing mechanism and being also movable to another position for locking said releasing mechanism against action, substantially as specified."

This claim is functional in character and includes only three elements. One of these is "a hand lever E." This lever is shown at E in Fig. 3 of the Felt patent, and is movable into three different positions corresponding with the three respective functions described above. There is no corresponding hand lever in the Wales structure, but as considerable testimony has already been taken on this point I will not consider this particular matter.

As a matter of fact, the Felt structure is different in every respect from either the Wales or the Burroughs. Mr. Felt in his deposition undertakes to apply the terms of his claim to the Wales structure. In so doing he describes with equal accuracy the structure embodied in the Burroughs machine. This will be evident when a comparison is made between his description of the Wales mechanism, and the same description slightly altered to cover the Burroughs mechanism, as shown in the following parallel columns:

MAGRANE-DIRECT.

Felt's Description of the Wales Mechanism.	The same Description applied to the Burroughs Mechanism.
In Exhibit Defendant's machine, the "hand-lever E" of the claim is represented by the long lever on the left hand side of the	In Exhibit Defendant's machine, the "hand-lever E" of the claim is represented by the long lever on the left hand side of the

machine just beneath or a little to the left of directly beneath the highest order of keys. This lever stands obliquely to the base of the machine, and the upper end of it is pivoted to a crank on a rock-shaft, which rotates whenever the key on the top of the machine inscribed "error" is depressed. The other end of this hand-operated key-releasing lever is raised whenever the key on top of the machine inscribed "rep't" is depressed. If this last mentioned key be depressed and then pushed toward the back of the machine, it will remain so depressed and hold the lower end of the hand-operated key-releasing lever in an elevated position, as compared with normal position. When the key which is inscribed "rep't" is not held in its depressed position, in which position it locks the key-releasing mechanism against action, or in other words when the key marked "rep't" is in its highest position, the key-releasing mechanism is in operative condition.

The key-releasing mechanism of the claim is represented in Exhibit Defendant's machine by the rock-shaft referred to in the last paragraph. As before stated, this rock-shaft rotates whenever the key

Deposition of Defendant's Witness, Robert Magrane.

machine just beneath or a little to the left of directly beneath the highest order of keys. This lever stands obliquely to the base of the machine, and the upper end of it *engages* a crank on a rock-shaft, which rotates whenever the key on the top of the machine inscribed "error" is depressed. The other end of this hand-operated key-releasing lever is *depressed* whenever the key on top of the machine inscribed "rep't" is depressed. If this last mentioned key be depressed it will remain so depressed and hold the lower end of the hand-operated key-releasing lever in *a depressed* position, as compared with normal position. When the key which is inscribed "rep't" is not held in its depressed position, in which position it locks the key-releasing mechanism against action, or in other words when the key marked "rep't" is in its highest position, the key-releasing mechanism is in operative condition.

The key-releasing mechanism of the claim is represented in Exhibit Defendant's machine by the rock-shaft referred to in the last paragraph. As before stated, this rock-shaft rotates whenever the key

Deposition of Defendant's Witness, Robert Magrane.

marked "error" is depressed. It also rotates whenever the key marked "rep't" is not depressed and the main operating lever of the machine is vibrated from its normal position, and then allowed to return to its normal position. This rotation of the rock-shaft taking place during the early part of the return stroke of the main-operating lever.

* * *

The mechanism connecting it (the hand-operated lever) to said releasing mechanism of the claim is represented in Exhibit Defendant's machine by the crank just inside the left side frame of the machine, and mounted on the rock-shaft of the key-releasing mechanism. This is the lever above referred to to which the top of the hand-operated lever is connected.

Summing up the foregoing reference to the Defendant's machine:

The "key-releasing mechanism" of the claim is represented in defendant's machine by the rock-shaft above referred to.

The hand-lever E of the claim is represented in defendant's machine by the hand-operated lever above described as being located at the left hand side of the machine and occupying a

marked "error" is depressed. It also rotates whenever the key marked "rep't" is not depressed and the main operating lever of the machine is vibrated from its normal position, and then allowed to return to its normal position. This rotation of the rock-shaft taking place during the early part of the return stroke of the main-operating lever.

* * *

The mechanism connecting it (the hand-operated lever) to said releasing mechanism of the claim is represented in Exhibit Defendant's machine by the crank just inside the left side frame of the machine, and mounted on the rock-shaft of the key-releasing mechanism. This is the lever above referred to to which the top of the hand operated lever is *operatively* connected.

Summing up the foregoing reference to the Defendant's machine:

The "key-releasing mechanism" of the claim is represented in defendant's machine by the rock-shaft above referred to.

The hand-lever E of the claim is represented in defendant's machine by the hand-operated lever above described as being located at the left hand side of the machine and occupying a

position oblique to the base, the upper end being connected to the crank just inside the frame at the left hand side of the machine, mounted on the rock-shaft of the key-releasing mechanism.

The "mechanism connecting it to said releasing mechanism" is this crank on the rock-shaft just mentioned.

"Said lever being movable to one position for operating the releasing mechanism and also being movable to another position for locking said releasing mechanism against action" is represented in defendant's machine by the hand-operated lever when in its normal position; that is, when the key marked "rep't" is in its raised position, which permits the key-releasing mechanism to operate and perform its function of releasing the keys, and by the hand-operated lever when it is in its other position with its lower end raised to a point and position at which the key-releasing mechanism is locked against action, so that any keys depressed will remain depressed throughout repeated operations of the main operating lever of the machine and avoid the necessity of resetting the keys over and over again, and the same

Deposition of Defendant's Witness, Robert Magrane.

position oblique to the base, the upper end being *operatively* connected to the crank just inside the frame at the left hand side of the machine, mounted on the rockshaft of the key-releasing mechanism.

The "mechanism connecting it to said releasing mechanism" is this crank on the rock-shaft just mentioned.

"Said lever being movable to one position for operating the releasing mechanism and also being movable to another position for locking said releasing mechanism against action" is represented in defendant's machine by the hand-operated lever when in its normal position; that is, when the key marked "rep't" is in its raised position, which permits the key-releasing mechanism to operate and perform its function of releasing the keys, and by the hand-operated lever when it is in its other position with its lower end raised to a point and position at which the key-releasing mechanism is locked against action, so that any keys depressed will remain depressed throughout repeated operations of the main operating lever of the machine and avoid the necessity of resetting the keys over and over again, and

Deposition of Defendant's Witness, Robert Magrane.

when one number is to be repeatedly added and printed by the machine. And this hand-operated lever is moved to its raised position and dropped back to its other position by manipulation of the key on top of the machine, marked "rep't."

the same when one number is to be repeatedly added and printed by the machine. And this hand-operated lever is moved to its raised position and dropped back to its other position by manipulation of the key on top of the machine, marked "rep't."

Adjourned to Friday, May 19, 1911, at 10:30 A. M.

New York, May 19, 1911.

Met pursuant to adjournment.

Present, Counsel as before.

(Witness continued his answer to 4 Q.):

To sum up the main points here involved: The Burroughs, Felt and Wales machines all include mechanism for the performance of the three functions described above. In the Burroughs structure the performance of these functions is controlled by two independently actuated keys, those described respectively as error and repeat keys. In the Felt mechanism all three functions are controlled by the manipulation of a single hand-operated lever which may be moved to any one of three positions. It is this difference in structure which makes claim 21 of Felt patentable over the prior mechanism of Burroughs. The Wales mechanism is almost identical with that of Burroughs, and it has the two independently operable keys similar to those utilized in the Burroughs mechanism. The element "hand lever E," included in this claim, is not present in either the Burroughs or the Wales structure.

The other four claims included in the Felt patent No. 568,021 are drawn to details of the carrying mechanism.

As is mentioned above, the numeral wheels are acted

Deposition of Defendant's Witness, Robert Magrane.

upon by two independent trains of mechanism. One of these, which I denoted as the primary actuating mechanism, is controlled by the keys on the keyboard; the other, termed the secondary actuating mechanism, is a train of mechanism making up the carrying system from one numeral wheel to the adjacent wheel of higher order. It is evident that both of these trains of mechanism cannot act simultaneously to move the numeral wheel, and for this reason the carrying mechanism is detained in its action until the primary actuating mechanism has ceased its movement. This is known in the art as a deferred action transfer. This mechanism consists of three essential parts: First, a lever adapted to move the numeral wheel in a carrying operation; second, a detent holding such lever from operation and controlled by the position of the numeral wheel of next lower order; and, third, a means to restrain the carrying lever from performing its function after it has been tripped by the withdrawal of the detent until the primary actuaters have ceased their movements.

A further object of the particular mechanism here under consideration is to cause this work of carrying to be done by power derived from the movement of the handle on the machine instead of by power derived from the keys. The purpose and advantage of this have already been explained.

The four claims in suit are drawn to this mechanism. Claim 47 reads as follows:

> "47. The combination with the carrying levers and their latches, of devices for moving the levers into position for carrying, such devices being also retracted partially immediately after thus moving the levers to allow the levers released from the latches to escape re-engagement therewith, substantially as specified."

This claim also is functional in character and includes

Deposition of Defendant's Witness, Robert Magrane.

but three elements. All of the functions of this mechanism described above and also the specific elements recited in this claim are found in the patent to W. W. Hopkins No. 517,383.

The carrying mechanism of Hopkins is fully shown in Figs. 51 to 55, inclusive. The carrying levers are shown at 354, their latches are shown at 360, the devices for moving these levers into position for carrying are shown in the figures as an arm 391 mounted upon a rock shaft 390. The functional part of the claim is shown clearly in Figs. 51, 52 and 53. In Fig. 53 the carrying lever is shown in its carrying position, and is locked in that position by the latch 360, engaging pin 361 attached to the lever. The lever was moved to this position by the arm 391, which moved to the position shown by the dotted lines in the figure. After the carrying lever has been latched, as illustrated in the figure, the arm 391 has moved to its full line position. This partial retraction "after thus moving the levers to allow the levers released from the latches to escape re-engagement therewith" is thus illustrated. In Fig. 51 the lever 354 is shown thus released from its latch 360, and it is now held from engagement with the numeral wheel 347 by the arm 391.

This is as far as the claim goes, but in carrying out the functions described above the arm 391 moves to a third position, as shown in Fig. 52, which allows the carrying lever 354 to engage with the numeral wheel to effect the carriage.

Claim 48 is identical with claim 47, except for the additional elements:

> "And a cam device for controlling the movement of such devices for moving the levers."

As already described, all of the movements included in this claim are performed by the arm 391 mounted

Deposition of Defendant's Witness, Robert Magrane.

upon the rock shaft 390. This rock shaft 390 is cam controlled, as is shown in Fig. 24 of the Hopkins patent. To one end of the shaft 390 is attached an arm 392, which carries a pin 392*a* positioned within a slot 393, forming a cam surface. The slot is located in a longitudinally slideable plate 378. When the plate 378 is moved it exerts a camming action upon the pin 392*a*, thereby moving the arm 392 and the shaft 390.

Claim 49 reads as follows:

> "49. The combination with the carrying levers and their latches, of the rock shaft N, and its pins, and a cam for rocking said shaft in moving the carrying levers, and also acting to allow it to rock back partially to give opportunity to the levers which may be released from their latches to move far enough to escape re-engagement, substantially as specified."

The rock shaft N and its pin I do not find embodied in the Wales structure at all, even with considerable straining of the term. It is completely disclosed, however, in the Hopkins patent cited. The rock shaft is the shaft already described as 390, the pin is the arm 391 mounted upon that shaft. Its method of operation is identical with that of the Felt rock shaft and pin. It accomplishes identically the same functions.

Claim 52 reads as follows:

> "52. In a calculating machine, the combination of the numeral wheels, the carrying levers, a rock shaft controlling said levers, and a hand device or lever whereby said shaft is rocked, substantially as specified."

This claim is also not in the Hopkins structure. It has already been explained how motion is transmitted to the rock shaft 390 by movement of the slide 378, shown in Fig. 24. As shown in the same figure, to this slide is attached a link 377, the other end of which is pivoted to an arm 376 adapted to rotate upon a shaft 345. The arm 376 is formed with two horizontal projections carrying

Deposition of Defendant's Witness, Robert Magrane.

pins 374 and 375, each of which is adapted to engage and be moved by a rectangular frame 373. To this frame is connected a rod 370, attached to a disk 269 mounted upon shaft 143. The disk is moved by a handle 275, shown in Fig. 4, by means of a link 271, shown in the same figure. Referring again to the Fig. 24, rotary movement of the disk 269 gives a vertical movement to the rectangular frame 373. This vertical movement is transmitted through pin 374 to the lever 376, moving that lever, the link 377, and the slide 378 to the left, as shown in Fig. 24. Through this train of mechanism the rock shaft controlling the carrying levers is rocked by the hand device or lever, shown in Fig. 4.

This claim is also met in one of Felt's earlier patents, No. 465,255. The numeral wheels are shown at 4 in Fig. 11 of this patent; the carrying levers are shown at 28 in the same figure; the rock shaft controlling said levers is shown at 37, which controls said levers by means of an arm 38 and a connecting link 36 attached to the arm and to the carrying lever. The rocking of shaft 37 controls the movement of the carrying lever. The hand device or lever whereby said shaft is rocked is shown in Fig. 2. One end of the rock shaft 37 has attached to it a crank 38, which is connected by rod 39 to a lever 40, pivoted at 41 and provided with an operating knob 42. The depression of this knob, as is obvious, will rock the shaft 37.

I find also that all four of these claims drawn to the carrying mechanism are met in the patent to W. H. and W. W. Wythe, No. 445,582.

The three elements of claim 47 are all disclosed in Fig. 6 of this patent. The carrying levers are shown at p^2, mounted upon shaft P; their latches are shown at *r;* devices for moving the levers into position for carrying are shown as the cam N mounted upon shaft F', which

Deposition of Defendant's Witness, Robert Magrane.

transmits movement to a roller p' mounted upon an arm p, fastened to shaft T.

In this mechanism the arm p and carrying lever p^2 and the lug p^6 forming a part of the carrying lever are all moved by the cam N in a clockwise direction about the shaft P until the latch r snaps over the lug p^6. The cam N so controls the movement of the carrying levers that should the latches r be tripped by the related numeral wheels the lug p^6 will escape from the latch, but this movement of the carrying lever will be slight, and the actual carrying operation, as performed by the carrying levers, will be deferred.

The mechanism thus described performs the identical functions as does either the Felt or the Hopkins mechanism.

As claim 48 differs from claim 47 only in including an additional element, "a cam device," etc., and as the cam N has already been described, it is apparent that this claim is also met in the structure of Wythe.

Claim 49, which is similar to previous claims, except that it includes specifically "the rock shaft N and its pin," is also met in the Wythe patent. The rock shaft is shown in Fig. 6, being the shaft P previously described, and the pins attached thereto are shown at p^5, to which are connected the carrying pins p^4.

All of the elements recited in claim 52 are also found in the Wythe mechanism. The numeral wheels are shown in Fig. 10, the carrying levers are shown at p^2 in Fig. 6, the rock shaft controlling these levers is shown at P. The hand device or lever whereby said shaft is rocked is shown in Fig. 2 as a drawer, the movement of which rocks a bell crank m^2 pivoted to the side frame of the machine. The upper arm of this bell crank carries a connecting rod m^3, which moves a crank m^4 attached to a shaft F', shown in Fig. 6. The shaft F' as already de-

Deposition of Defendant's Witness, Robert Magrane.

scribed through the cam M and auxiliary cam n^2 moves the lever p attached to shaft P and rocks the same.

It will be noticed that both the carrying mechanism of Hopkins and of Wythe have essentially a three point movement exactly similar to the movement of the Felt mechanism and for exactly the same purpose. In the deposition of Mr. Felt he clearly describes this movement when referring to the Wales mechanism. His description is equally applicable to both the Hopkins and the Wythe devices, as will be clear from a comparison of the operation of those mechanisms and his description. Mr. Felt's description follows:

> "This swinging-frame has three positions, one its extreme downward position farthest away from the numeral-wheels, another its position slightly removed from the one just mentioned towards the numeral-wheel, wherein it holds all carrying-levers which have been touched off from re-engagement with their latches until the prime movements of the numeral-wheels have been completed, and the other position, that to which it moves to permit the carrying-levers, under the impulse of their impelling springs, to swing towards the numeral-wheels and rotate them in their secondary or tens carrying operation. Then at the next subsequent manipulation of the machine to add another number the swinging-frame retracts the carrying-levers against their impelling springs to a point where they are engaged and held by their latches, and then the swinging-frame immediately moves back toward the numeral-wheels a small distance, where it remains until, as already explained, it moves still farther toward the numeral-wheel to its position nearest the numeral-wheel."

The four claims of patent 661,121 are directed to a printing mechanism.

The object of the mechanism in this case is to cause a spring impelled hammer to deliver a clean sharp printing impression when released. The first of these claims, No. 37, reads as follows:

Deposition of Defendant's Witness, Robert Magrane.

"37. The calculating machine, having type and hammers for impressing the paper against the type, said hammers having hinged heads made separate from the body, actuating springs attached to the heads, and means for arresting the heads before the hammers can make the impressions, substantially as specified."

The mechanism included in this claim consists of four elements; the first is a loosely pivoted hammer; the second and so-called head is a driver normally in contact with the hammer and from which the hammer derives its motion in the act of printing; the third is a tension spring connected with the driver which furnishes the power to move the driver and the hammer in the printing impression; the fourth is a stop which is adapted to arrest the motion of the driver just before the printing impression is made. The construction is such that after the driver is thus arrested the hammer continues its forward movement under its own momentum and delivers a sharp clean blow at the printing point. This mechanism is best shown in Fig. 7 of the Felt patent. This principle of delivering a sharp blow by mechanism which allows the hammer to rebound slightly after delivering its blow is old, well known and is utilized in many forms of mechanism, examples of which are found in gun locks and in car-gongs. It is also common in many types of recorders.

The corresponding mechanism in the Wales machine is shown in the drawings marked "Cut 4" and "Cut 5" respectively. The printing hammer is shown at 610; the driver is in the form of a slotted link 616, which is loosely attached to the hammer. The spring connected with the driver is shown at 615; the stop is shown at 617 and is located within the slot of the driver, as shown in the figures. In the operation of this mechanism, when the hammer is released the tension of the spring pulls the driver

Deposition of Defendant's Witness, Robert Magrane.

upward, and the driver imparts its motion to the hammer, causing it to swing to the right upon shaft 611, as shown in the figures. Just before the hammer makes the printing impression the driver comes in contact with the stop 617 and its motion is arrested. The loose connection between the driver and the hammer permits the latter to continue its motion, as in the Felt mechanism described above.

This same arrangement of parts as shown in the Wales machine is found in patent to Felt No. 441,233. Referring to Fig. 2 of that patent, the hammer is shown at P, pivoted at 32; the driver consists of a loop 48, loosely connected with the upper part 45 of the hammer. The spring connected with the driver is shown at 44; the stop is shown at 47 in the form of a comb, between the teeth of which passes a wire 46 connecting the spring 44 with the driver 48.

In operation when the hammer is released the spring 44 moves the driver and the upper part of the hammer to the right, as viewed in the figure. Just before the hammer makes its impression the part 48 of the driver is arrested by the teeth of the comb 47, and the hammer continues its motion, as in the two previous instances described. The device is described in the patent specifications on page 3, lines 31 to 44, as follows:

> "Each spring 44 is connected with its appropriate hammer by a piece of straight wire 46, that is passed between the depending teeth of a toothed guide-bar 47, and in each straight piece of wire is provided a knot 48 or other suitable stop to engage the toothed guide-bar 47 and relieve the hammer from the tension of the spring 44 just before the hammer reaches the end of its stroke, thereby allowing the hammer to yield slightly after delivering its blow, and thus prevent it from obstructing the subsequent movements of the type-head and ribbon."

Claims 38, 39 and 40 seem to possess little, if any, pat-

Deposition of Defendant's Witness, Robert Magrane.

entability over claim 38, and it does not appear necessary to consider these claims in detail. All four of the claims seem to be substantially anticipated by the mechanism disclosed in patent No. 441,233 cited.

Adjourned to Saturday, May 20, 1911, at 10:30 A. M.

New York, May 20, 1911.

Met pursuant to adjournment.

Present, Counsel as before.

Q. 5. Please refer to claims 38, 39 and 40 of Felt patent 661,121, and compare the same with the prior art considered by you in connection with claim 37 of this patent, and state whether or not you find in the prior art an embodiment of said claims 38, 39 and 40?

A. I do so find such embodiment in the prior art, namely, in the patent already cited, No. 441,233.

Claim 38 reads as follows:

> "38. In a machine for printing numbers, the combination with the type, of swinging hammers having their heads made separate from their bodies, springs attached to the heads and through them actuating the bodies, and means for arresting the heads before the making of the impressions, substantially as specified."

In Fig. 2 of the reference the type are shown attached to the periphery of the moveable segment H. The swinging hammers are shown at P, pivoted at 32; this part forming the body of the hammer. The heads, made separate from the bodies, are shown at 48. The spring attached to the heads, and through them actuating the bodies, are shown at 44. The means for arresting the heads before the making of the impressions is shown at 47, which is the comb adapted to limit the movement of the knot forming a part of the head just before the hammer body makes its impression.

Deposition of Defendant's Witness, Robert Magrane.

Claim 39 reads as follows:

> "39. In a machine for printing numbers, the combination with the type, of swinging hammers composed of hinged heads and hinged bodies, the actuating spring being attached to the heads and the heads adapted to actuate the bodies, and means for arresting the heads before the completion of the stroke, substantially as specified."

This claim does not read squarely on either the Wales mechanism or the mechanism shown in the reference 441,-233. Neither of these shows a hinged head. The nearest approach to this is the driver which is swiveled to the body of the hammer. As the construction in the Wales machine and in this early Felt machine is substantially identical, so far as this claim may be interpreted to read upon the Wales device its terms can be applied with equal accuracy to the cited reference. Considering this driver as mechanically equivalent to the hinged head called for in this claim, the elements are found in the reference, as follows:

The types are shown upon the segment H, as before described, the swinging hammer is composed of the hinged body P and a mechanical equivalent of the hinged heads at 48; the actuating springs attached to the head are shown at 44; the heads are adapted to actuate the bodies, as is obvious from the arrangement of parts; and the means for arresting the heads before the completion of their stroke is the comb 47.

Claim 40 reads as follows:

> "40. In a machine for printing numbers, a printing hammer made in two parts and hinged together, one part receiving the actuating power and imparting it to the other, and being itself arrested before the making of the impression, substantially as described."

The same qualifications made as to the interpretation of claim 39 are applicable also to this claim.

Deposition of Defendant's Witness, Robert Magrane.

The printing hammer, made in two parts and hinged together, is formed of the part P and the part 48. The part receiving the actuating power and imparting it to the other is the part 48. This part 48 is itself arrested before the making of the impression by the comb 47, which meets the functional limitation included in the claim.

Counsel for defendant offers in evidence the drawings referred to by the witness and asks that they be marked "Defendant's Exhibit Magrane Drawing Fig. 1," "Defendant's Exhibit Magrane Drawing Fig. 2," "Defendant's Exhibit Magrane Drawing Fig. 3," "Defendant's Exhibit Magrane Drawing Fig. 4" and "Defendant's Exhibit Magrane Drawing Fig. 5."

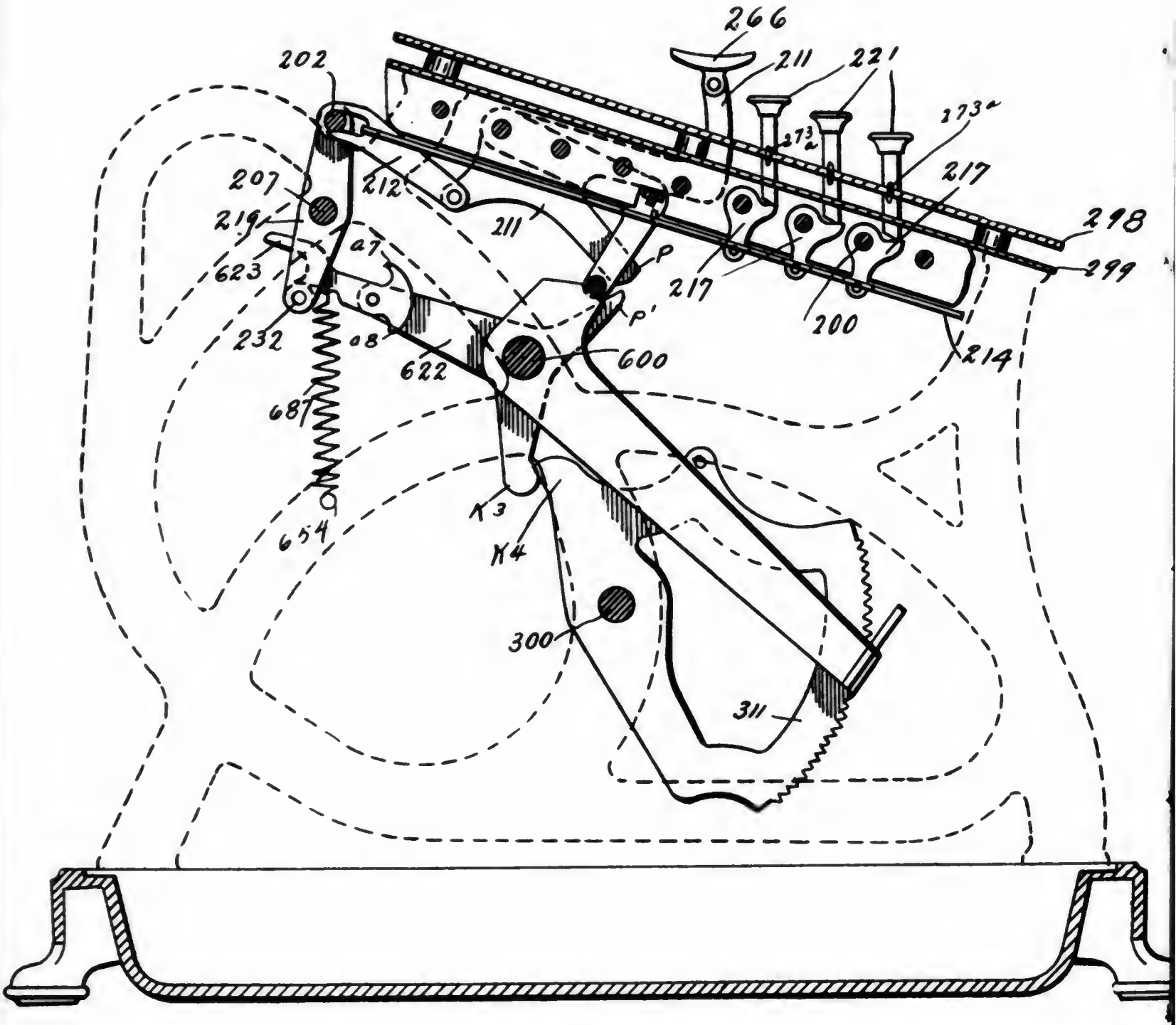
266
211
221
202
273a
273a
217
207
212
211
298
219
a7
P
299
623
217
P'
200
232
a8
600
214
622
687
K3
654
K4
300
311

Fig. 1

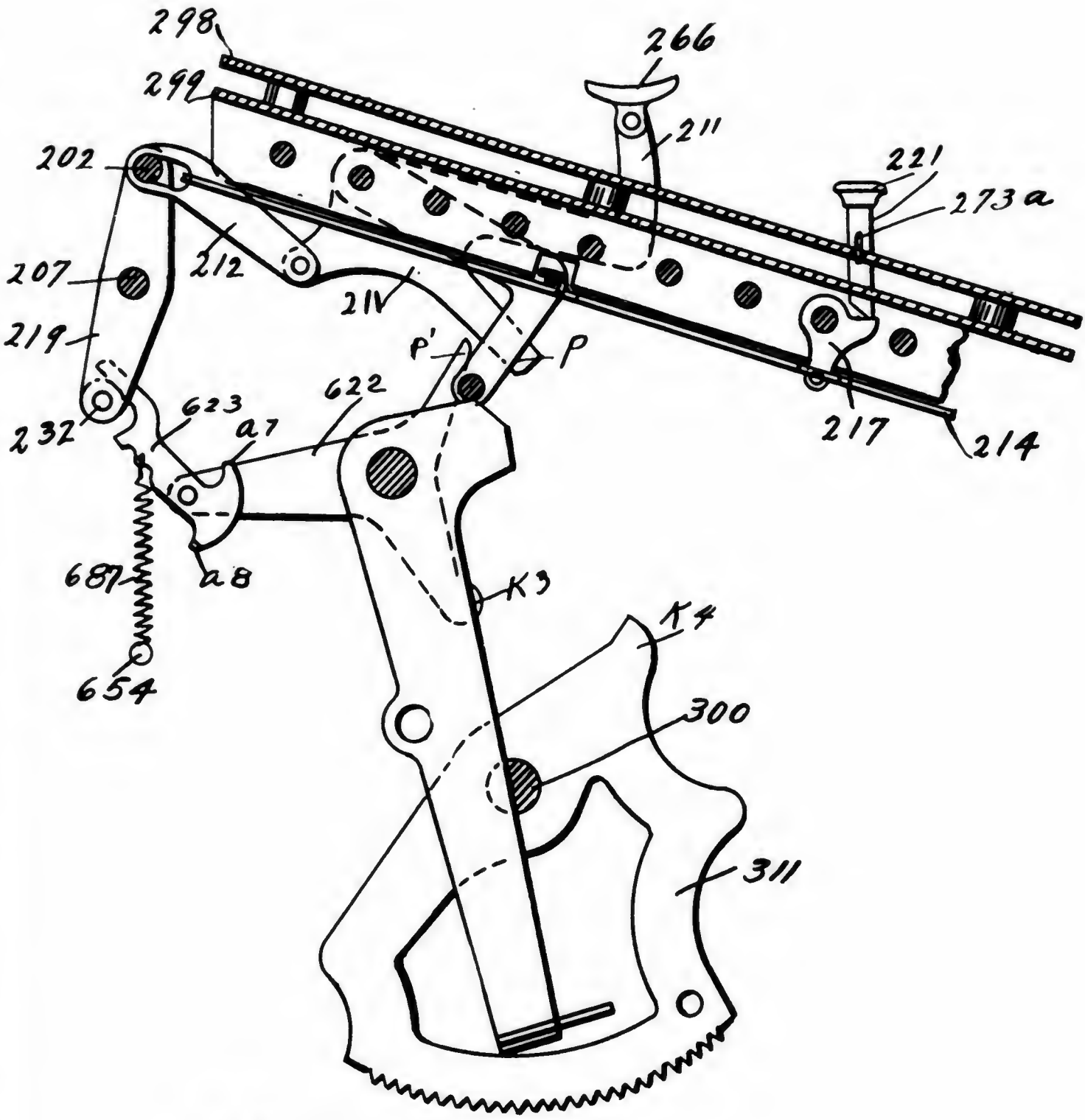
298
299
266
211
202
221
273a
207
212
214
219
P'
P
622
623
232
a7
217
687
a8
K3
K4
654
300
311

Fig. 2

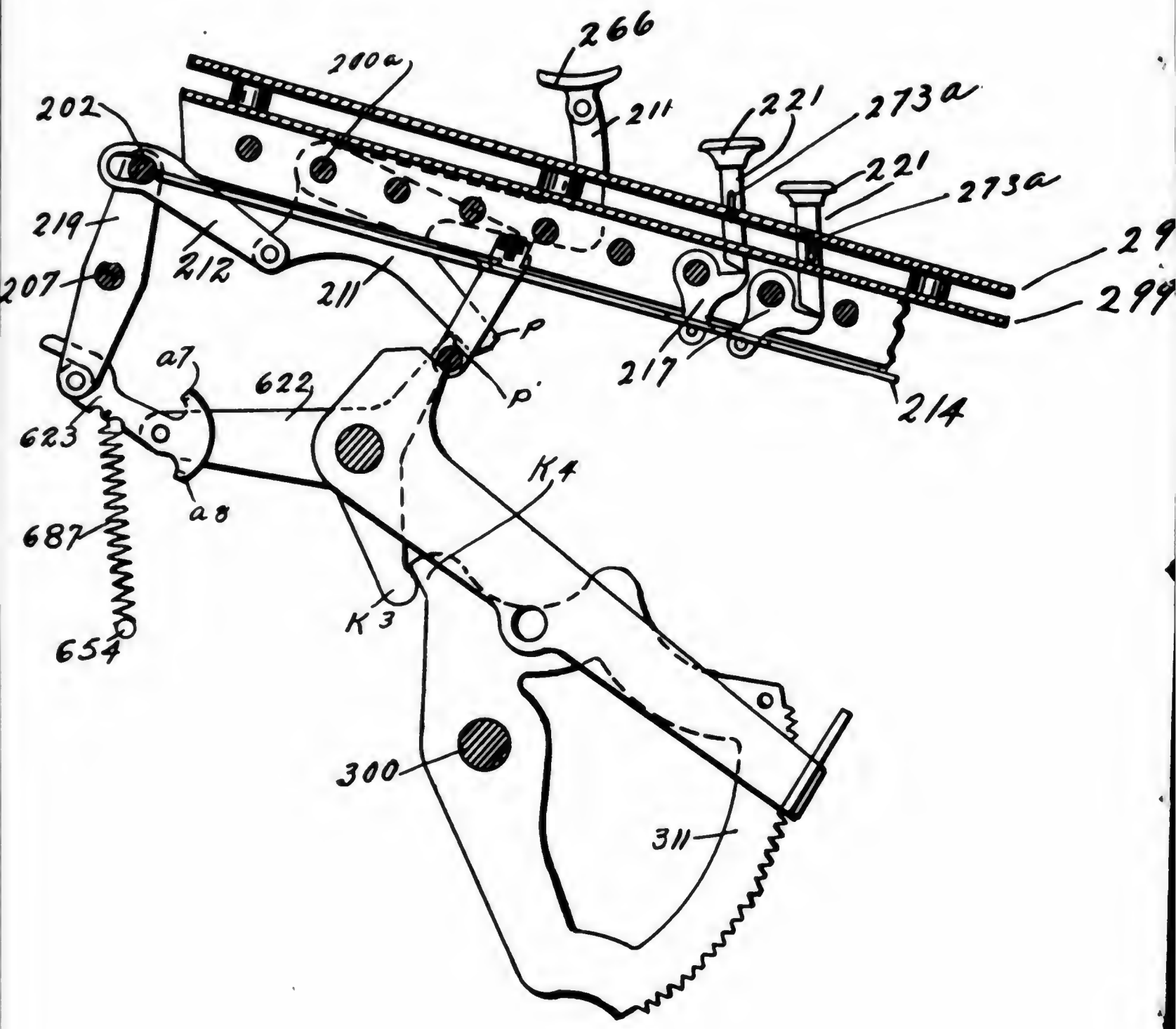
266
200a
202
211
221
273a
221
273a
219
212
211
207
29
299
P
a7
622
P'
217
214
623
K4
a8
687
K3
654
300
311

Fig. 3

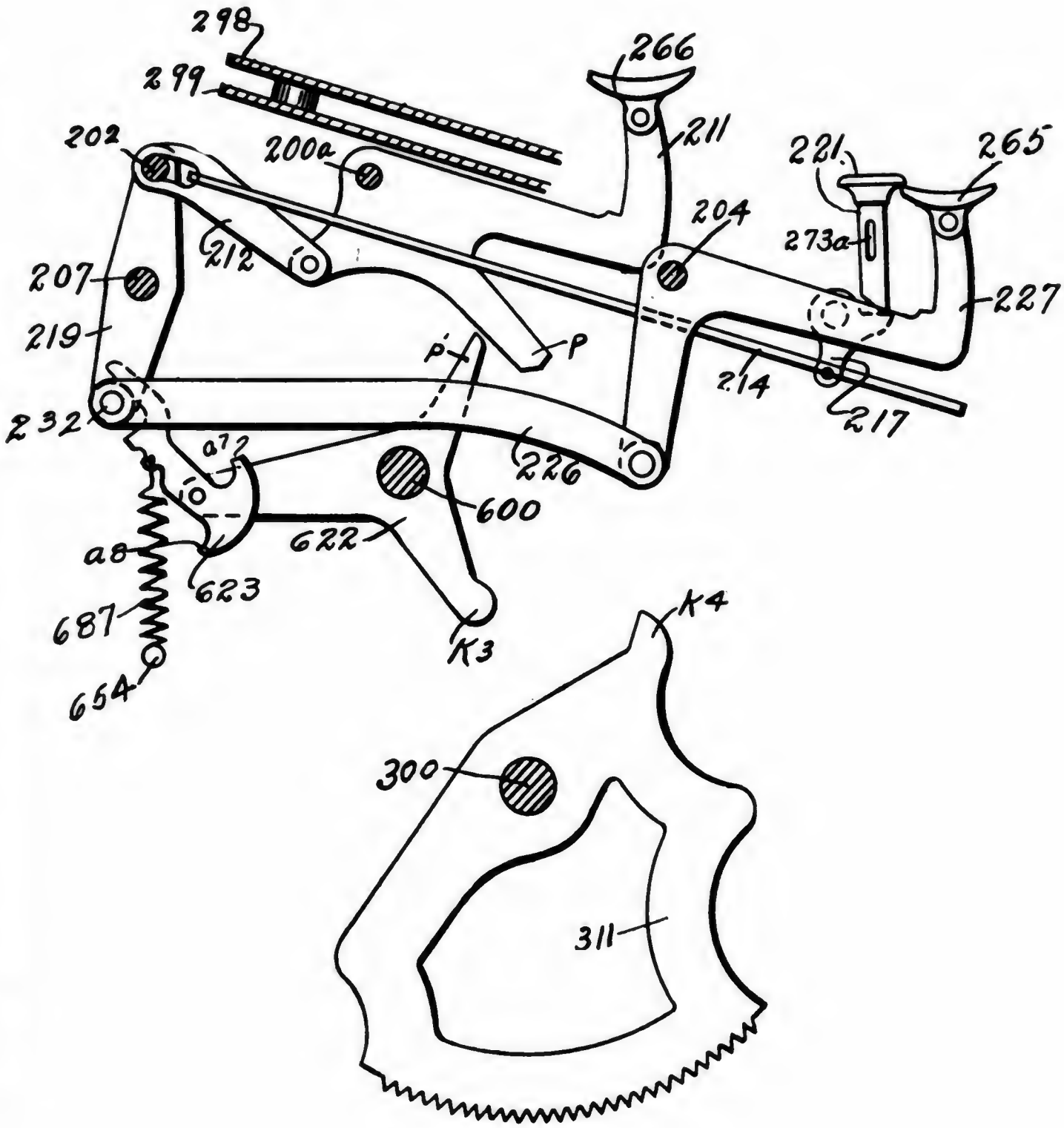
298
299
266
211
202
200a
221
265
204
273a
212
207
227
219
P'
P
214
232
217
226
600
622
623
687
654
K3
K4
300
311

Fig. 4

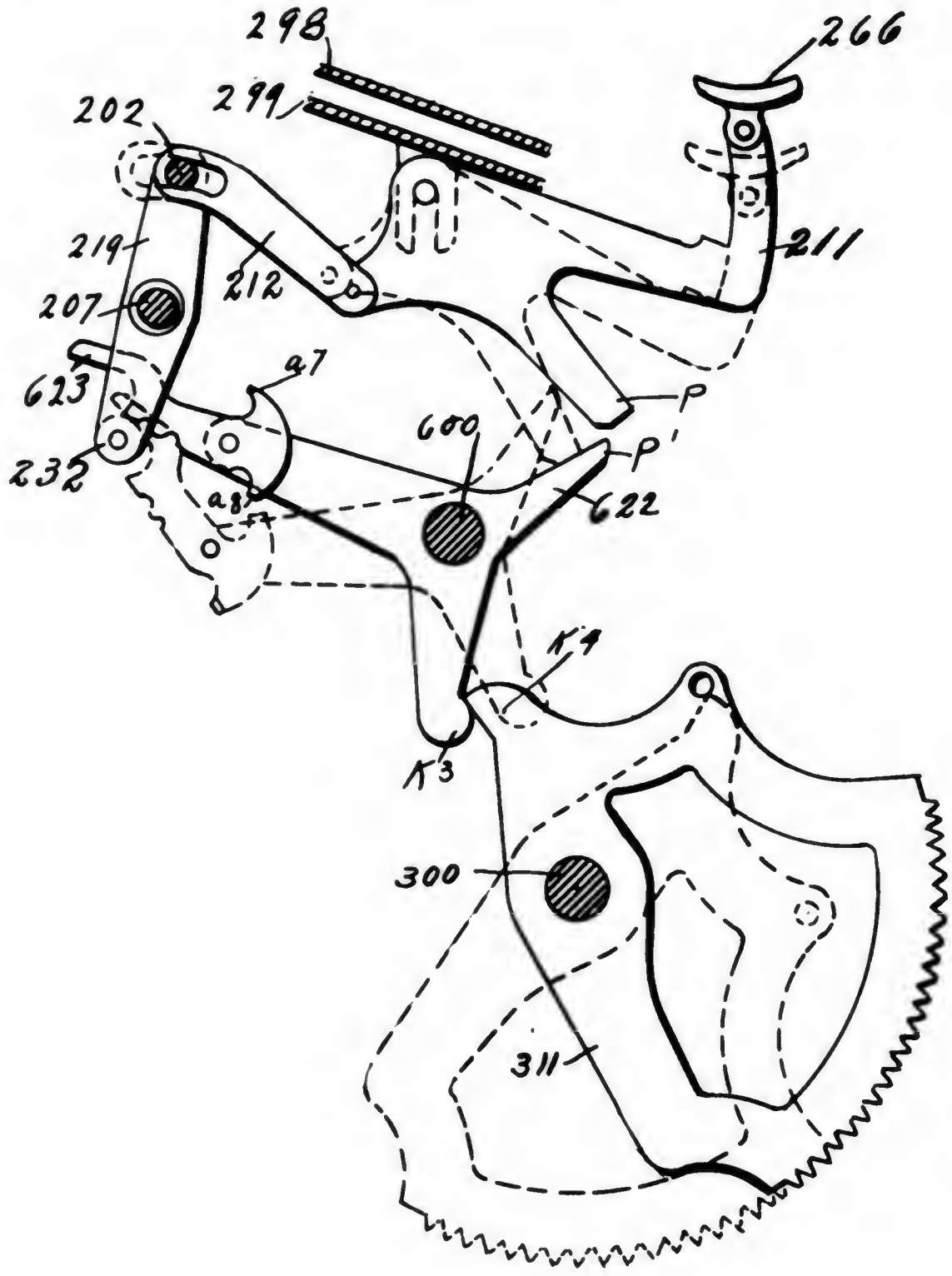

Fig. 5

Counsel for defendant offers in evidence the following patents referred to by the witness: U. S. patent 517,383, Hopkins, and U. S. patent 441,233, Felt, and asks that they be marked respectively, "Defendant's Exhibit Hopkins Patent 517,383," and "Defendant's Exhibit Felt Patent 441,233."

Direct examination closed.

Cross-Examination by Mr. Clarke.

Deposition of Defendant's Witness, Robert Magrane.

X-Q. 6. Mr. Magrane, you say you are an attorney. Do you mean a patent attorney?

A. I mean both an attorney at law and a patent attorney.

X-Q. 7. Where are you practicing as an attorney?

A. I am not practicing as an attorney at law, but am specializing in patent causes. My offices are in Wilkes-Barre, Pa.

X-Q. 8. Is that where the defendant's factory is located?

A. The defendant's factory is located in Kingston, just across the river from Wilkes-Barre.

X-Q. 9. Has it offices in Wilkes-Barre?

A. No, it has the sales agency in Wilkes-Barre, other than that it has no office in that city.

X-Q. 10. Are you practicing before the courts in patent causes?

A. I am.

X-Q. 11. Are you also engaged in soliciting patents in the United States Patent Office, as a registered patent attorney there?

A. I am.

X-Q. 12. How long have you been a member of the Bar?

A. Between three or four years.

X-Q. 13. How long have you been a registered patent attorney in the Patent Office?

A. A little less than two years.

X-Q. 14. Is the defendant company one of your regular clients'

A. I have done more or less work for the company during the past six months. I do not recall doing any work for them prior to that time.

Deposition of Defendant's Witness, Robert Magrane.

X-Q. 15. What has been the nature of your work for them?

A. I have prosecuted pending applications and have conducted a series of interference suits in the Patent Office and have made some validity searches for them.

X-Q. 16. Have you now in hand for them other patent work besides the subject matter of this suit?

A. I am supervising the establishment of a patent law department, which is an association with their department of inventions. They have their own attorney in charge of this department and it is being organized under my supervision to a greater or less extent. Beyond this and some validity search work which I am doing in connection with another suit, I am doing no work for the defendant company.

X-Q. 17. You say that for about two years you were an assistant examiner in a division of the Patent Office. What division was that?

A. Fourth Assistant Examiner in Division 23.

X-Q. 18. What is the title of the class of patent applications assigned to that division for examination?

A. They include the following classes: 233, Change-Makers, 234 Recorders, 235 Registers. This division also handles three other classes, 161 Time Controlled Mechanism, class 58, I think is the number, Horology, and the other class was phonographs, 131, I think.

X-Q. 19. While you were in that division, how many assistant examiners were there under the Primary Examiner of it?

A. Six, including myself.

X-Q. 20. You were the Fourth Assistant?

A. I was one of three fourth assistants included in the six.

X-Q. 21. While you were in that division, which assistant examiner had charge of the sub-classes that in-

Deposition of Defendant's Witness, Robert Magrane.

clude adding machines of the type of the Felt and the Burroughs and the Hopkins patents that you have cited in your direct examination?

A. Those are sub-classes 59, 60 and 62 and were in charge of Mr. Dowe.

X-Q. 22. On your direct examination you have testified that you have read and understand the Felt patent 628,176, sued upon, but you have said nothing further about it. Do you know why you have said nothing further about it?

A. I understood that consideration of this patent by agreement between counsel was to be taken up at a subsequent session of testimony for the defendant.

X-Q. 23. Do you expect then to testify about it?

A. I do not know.

X-Q. 24. What is your best belief on the question as to whether you will testify about it?

A. I could not say, as I have not discussed the matter with defendant's counsel.

X-Q. 25. Have you considered that patent or made any examination of the prior art with respect to it?

A. I have considered the patent and have partly completed an examination of the prior art with respect thereto.

X-Q. 26. How much time have you given to such examination?

A. That is a rather difficult question to answer. I have known for more than a year that this patent has been in litigation. I have been interested in its legal status, and all of the patents in the adding machine and allied arts that I have had occasion to look into during the past year, which I estimate to be about 2,000 in number, I have read with this patent in mind. So far as direct work upon this patent is concerned, I think I have

Deposition of Defendant's Witness, Robert Magrane.

devoted about five or six days to a validity search within the past two months.

X-Q. 27. Does Fig. 9 of Felt patent 441,233 show the elements that you think answer to the terms of claim 37 of patent 661,121, with the exception of the type?

A. It shows three of the four remaining elements of the claim.

X-Q. 28. What three?

A. It shows the hammers, the hinged heads and the actuating spring. In patent 661,121 the two parts of the hammer are pivoted on the same shaft and move together about that shaft during a part of the time the impression is being taken. The word "head" used in this claim is not definite in meaning. The function of this so-called head is to drive the hammer by force transmitted to the head by a spring. The term driver more accurately describes this particular element. Both the hammer and its head may properly be described as in this claim as being hinged to the shaft, upon which they rotate. In the Wales mechanism the parts are differently arranged. There is no part in the Wales mechanism which may be called a head properly or which is pivoted alongside of the hammer on the same shaft. The driving part which performs the function of the swinging head in the Felt patent No. 661,121 is in the form of a shackel, which is loosely attached to the tail of the hammer. The connection of this shackel with the spring and with the hammer in the Wales mechanism is exactly the same mechanically as the connection of the shackel numbered 46 in Fig. 9 of patent 441,233, with the hammer P and the spring 44. So far as is necessary to interpret this claim as reading upon the Wales mechanism to the same extent does it apply to the parts shown in the said Fig. 9.

By Mr. CLARKE: The references to the Wales mechanism in the witness' answer are objected to as non-responsive and volunteered.

Deposition of Defendant's Witness, Robert Magrane.

X-Q. 29. In said Felt patent 441,233, Fig. 9, what reference numeral designates the part that you think corresponds to the clause reading, "said hammers having hinged heads made separate from the bodies" in claim 37 of the Felt patent 661,121 sued upon?

A. The part in this particular figure is marked 46 and 48.

X-Q. 30. What is this part 46-48 made of?

A. It is a combination apparently of a piece of wire here numbered as 46 and "a knot 48 or other suitable stop", as described by Mr. Felt in his specification, page 3, lines 36-37.

X-Q. 31. The part 48 is a knot in the wire 46?

A. I do not know. The specification describes it as a knot or stop, as quoted above. The drawings show it as a substantial enlargement which marks the end of the shackle swiveled to the hammer.

X-Q. 32. The specification says, does it not, that the "knot 48" is "in" the straight piece of wire 46?

A. It describes the knot and also the "other suitable stop" as being "in" the straight piece of wire.

X-Q. 33. And what reference numeral does it give to the straight piece of wire, referring to line 33 of page 3?

A. 46.

X-Q. 34. Is the piece of wire 46 separate from or merely the integral straight end of the spring that actuates the hammer?

A. Apparently it is a separate piece. The Felt specification states at line 31 and following on page 3, that "Each spring 44 is connected with its appropriate hammer by a piece of straight wire 46".

The spring would necessarily have to be constructed of spring steel or brass, and if an attempt were made to form this wire into a so-called knot it is not seen how this could be regularly done without considerable trou-

Deposition of Defendant's Witness, Robert Magrane.

ble in annealing the wire so as to make it at all possible. The practical difficulty in the way of making a spring and a knot in the same integral piece of wire is so great that it is not at all likely any such construction would be followed. Mr. Felt speaks in his specification of the spring 44 and the piece of straight wire 46 as distinct entities.

X-Q. 35. Do they in any manner appear to be distinct in Fig. 9, that is do they appear to be two pieces of wire loosely connected with each other?

A. So far as this figure shows they may be two pieces joined at 48. In Fig. 2 the spring and the shackle might be separate parts and joined together by a third intermediate part, as shown in that figure at 46. The knot or other suitable stop 48, shown in Fig. 2, differs somewhat from that shown in Fig. 9.

X-Q. 36. Is there any where in the specification any statement of any relative movement between the wire 46 and the wire of the spring 44 other than a mere bending of such wire?

A. I do not know of any statement in the specification which speaks of any bending of the wire. There is no mention in the specification of any relative movement between the wire 46 and the spring 44.

X-Q. 37. In the Wales mechanism is the hammer spring loosely hooked to the upper end of the sheet metal part 614, which part you have called a driver?

A. No. The spring 512 is hooked into an eye in the top part of this driver and normally it is as securely hooked into place as such a spring attachment usually is. There should be no relative motion between the spring and the driver when the mechanism is properly assembled and is working accurately. Any loose motion at this point would interfere more or less with the best working of the mechanism.

Deposition of Defendant's Witness, Robert Magrane.

X-Q. 38. The part you call a driver in the Wales mechanism is a sheet metal part separate from the spring 512, is it not?

A. Yes.

X-Q. 39. And it has a swivel movement with respect to the hammer body 610 when the spring contracts?

A. Yes, there is a very slight swivel movement.

X-Q. 40. The hammer head in the Felt patent 661,121 is a sheet metal, part separate from the hammer spring, is it not?

A. I do not know. It might possibly be sheet metal, it might equally as well be a casting or a forging.

X-Q. 41. In both the Wales mechanism and the Felt patent 661,121, is it true that the hammer body, by its momentum, continues its movement, to strike the printing blow, after the flat metal part interposed between the hammer body and the hammer spring has come to a stop?

A. Yes.

X-Q. 42. In either the Wales mechanism or the Felt patent 661,121, is there a piece of wire hooked directly to the hammer body that strikes the impression blow?

A. In the Wales mechanism there is a pin forming part of the shackle which might be called a wire.

X-Q. 43. By pin you refer to the short horizontal pivot fixed in the lower end of the flat metal part 614, as described in the deposition of the defendant's witness McFarland in the words "The hammers 610 . . . are provided with . . . a leg 613. To this leg 613 is pivoted a link 614. . . ."

A. I do. By means of this pin the power of the spring is communicated to the hammer. In both this case and in the case of Felt patent 441,233 the power of the spring is communicated to the hammer through a member which is circular in cross-section.

Deposition of Defendant's Witness, Robert Magrane.

X-Q. 44. The spring is connected only to the other end of this part 614 in the Wales mechanism, is it not?

A. Yes, that is true.

X-Q. 45. Did you ever see a machine built like the Wythe patent?

A. I have seen one of the Wythe machines very similar to the mechanism disclosed in this patent, but no machine corresponding in every respect to the structure of this patent.

Adjourned to Monday, May 22, 1911, at 10 A. M.

NEW YORK, May 22, 1911.

Met pursuant to adjournment.

Present: Counsel as before.

X-Q. 46. And where did you see the machine referred to in your last answer?

A. At the shop of the defendant.

X-Q. 47. When?

A. I think it was about a year and a half ago.

X-Q. 48. Is it there still?

A. I don't know. I happened to be at the shops when this machine arrived there. I inspected it at that time and have never seen it since.

X-Q. 49. For what purpose did it arrive there?

A. I could not say directly. Mr. Hunter, the general manager of the defendant company, called my attention to the machine and asked me what I thought of it. It was a machine very similar to the one disclosed in the Wythe patent cited above. I operated the machine at the time, but it evidently had not been in use for several years, and it was some time before the parts were loosened up enough to work properly. Mr. Hunter showed me at the same time a copy of the Wythe patent here cited, and I compared the two machines. I also at the same time looked over the claims here in suit. I told Mr. Hunt-

Deposition of Defendant's Witness, Robert Magrane.

er that in my opinion there were such substantial differences between the machine then before me and the machine disclosed in the cited patent that it would be of little or no importance in determining the question raised in this suit. My inspection of the machine was rather casual, but thorough enough to base upon it such an opinion. I was not in the employ of the defendant company, and the whole proceeding took place in an off-hand and casual manner. What disposition of the machine such company made I do not know. I was told at the time that Mr. Wythe had manufactured several different models of adding machines, and that this was one of his earlier type.

X-Q. 50. Where did this machine come from?

A. I do not know.

X-Q. 51. When was it made?

A. I do not know.

X-Q. 52. Referring again to Fig. 9 of Felt patent 441,-233, does that drawing show the wire 46, "in" which—according to the specification—is the "knot 48", as separate from the spring 44?

A. The drawing does not show into how many pieces these parts are divided. This drawing differs from the arrangement shown in Fig. 2. So far as the disclosure goes the wire 46, shown in Fig. 9, may be connected to a knot or stop at 48, and the spring 44 also connected to the same knot or stop. In Fig. 2 the part connecting the spring 44 and the stop 48 is numbered 46 in the drawing. On the other hand, this drawing discloses both ends of the piece forming the shackle or "head" as being attached to the knot or stop 48.

X-Q. 53. Is your last answer intended to answer my last question in the affirmative or in the negative?

A. Limiting my answer to Fig. 9 of the patent, I would

Deposition of Defendant's Witness, Robert Magrane.

say that the wire 46 is separate from the spring 44 in the sense that it is separated from that spring by the knot 48.

X-Q. 54. Does the specification say that the wire 46 is to quote from your last answer, "separated from that spring (44) by the knot 48", or does the specification say that the "knot 48" is "in" the wire 46?

A. It says "in" the wire 46.

X-Q. 55. In your direct examination you spoke of Mr. Felt as "abandoning" the key-driven type of adding machine construction, and assigned as a reason that:

> "The carrying must be done in a small fraction of a second so that a powerful spring is required. The greater part of the power necessary to depress the keys was utilized in the winding up of this spring, as the carrying device is necessarily actuated upon each complete rotation of the associated numeral wheels."

Are you not aware of the fact that the well-known "Comptometers" manufactured by Mr. Felt for over twenty years past, and in use to-day in tens of thousands all over the world, always have been, and still are, adding machines of the key-driven type and answering to the description as just quoted from your testimony?

A. I am of course acquainted with the Comptometer machine. It is a different kind of a machine and in a different class from the machines that have been described. The description quoted applies to adding and listing machines, machines adapted to print a record of their operations. The comptometer is not a machine of this class. In the list of patents taken out by Mr. Felt the first patent cited is a machine of the comptometer class. I brought this in as showing the very earliest work of Mr. Felt in the art. In my description I attempted to show that in an adding and listing machine the amount of power required was so great that a key-driven machine is utterly impractical. The patents themselves are the very best evidence of this. For the reason set forth

Deposition of Defendant's Witness, Robert Magrane.

above, adding and listing machines have a side handle through which power is applied to move the various parts of the printing mechanism. The particular description cited refers to a Felt adding and listing machine with such a handle. The greater absorption of power in that particular machine, as I there stated, was consumed in the winding up of the carrying spring of that machine. This led to the next longical step in the development of this mechanism as there described, and throwing this work upon the band lever instead of upon the keys. In the comptometer of course the carrying springs have to be wound by power derived from the keys, for there is no other source in that type of machine from which the power can be taken.

X-Q. 56. Are you aware of the fact that Mr. Felt made and sold and put into regular commercial use a practical listing adding machine years before Burroughs ever had an adding machine that would either add correctly or print legibly or that could be "sold for money"?

A. I am not.

X-Q. 57. Are you aware of the fact that Burroughs never had an adding machine that would print legibly until he had adopted the multiple independently movable side-by-side type hammers disclosed by Mr. Felt in the Felt patent 441,233?

By Mr. DUNHAM: Objected to as incompetent, immaterial and irrelevant.

A. I am not.

X-Q. 58. Are you aware of the fact that the matter of driving from a hand lever, rather than from the keys, the power for the printing and the carrying functions in an adding machine, was an expedient utilized prior to both Felt and Burroughs by Henry Pottin of France?

Same objection.

A. I remember a French patent to an inventor of that

Deposition of Defendant's Witness, Robert Magrane.

name, which I recollect now was the application of electric power to the printing mechanism of a cash register. The power-driven machine is quite old, much older than any of the work of either Mr. Felt or Mr. Burroughs. The subject is a big one, and consideration of its broadest aspect did not seem to me pertinent to the issues here involved. For that reason I have confined my discussion to machines of the adding and listing types, the types which are involved in this suit.

X-Q. 59. Are you aware of the fact that before he adopted from Mr. Felt the multiple independently movable side-by-side type hammers, Burroughs tried and failed to make his adding machines print with the swinging platen form of printing mechanism of Pottin?

Same objection.

A. I am not.

X-Q. 60. Are the machines of the Felt patents sued upon adding machines of the multiple order type, having a separate bank of keys for each denominational order?

A. They are.

X-Q. 61. Is this also true of defendant's machine?

A. It is.

X-Q. 62. Is it true of the Hopkins patent that you cited?

A. It is not.

X-Q. 63. Does the same need for detaining the carrying operation until after the prime actuation of the numeral wheels to which carryings are to be transmitted, arise in a machine having only one bank of keys as against a multiple order machine?

A. There are many types of machines having one bank of keys. The same need does generally exist in these machines.

X-Q. 64. In the Hopkins machine, do the numeral wheels to which carryings are transmitted receive any

Deposition of Defendant's Witness, Robert Magrane.

prime actuations simultaneously with the prime actuation of the numeral wheel order, from which carrying is transmitted?

A. They do not.

X-Q. 65. Did you ever see a machine made like the Hopkins patent?

A. I have not.

X-Q. 66. In the Hopkins patent, from what is the power derived to rotate any numeral wheel in a carrying operation?

A. From the handle.

X-Q. 67. Is this power applied before or after the latching and unlatching of the parts that you have called carrying levers in the Hopkins patent?

A. Part of it is applied before and part after.

X-Q. 68. What do you mean by this?

A. To rotate a numeral wheel power must be applied to bring the actuating mechanism into engagement with that wheel, and then further power is necessary to move the wheel. In the Hopkins mechanism the power causing the first movement is applied before the latching and unlatching of the parts, and the second movement is caused by the power applied after that instant.

X-Q. 69. Is the power "necessary to move the wheel" stored before the part you have called a carrying lever is dropped into engagement with that wheel?

A. It is not according to the mechanism disclosed in the drawing. If the alternative construction set forth on page 16 of the specification, lines 56-64, be used however, in such case the power is so stored.

X-Q. 70. Even in the latter case, would the power be stored prior to that movement of the handle, which is subsequent to the latching up of the carrying lever?

A. It would not.

X-Q. 71. Is this power stored at the time when the carrying levers are latched up?

Deposition of Defendant's Witness, Robert Magrane.

A. I understand this refers as above to the power necessary to move the wheel. This power is not stored at that time.

X-Q. 72. In the defendant's machine and in the Felt patent 568,021, is the "power necessary to move the wheel" stored at the time when the carrying levers are latched?

A. In each case it is stored just prior to the latching.

X-Q. 73. In the machine of the Wythe patent is the power necessary to move the wheel stored at the time when the carrying levers are latched?

A. Some part of the power may be stored at that time.

X-Q. 74. What part of it?

A. That is hard to say, but it isn't sufficient at that time to effect a complete carrying operation.

X-Q. 75. And where does the power subsequently come from to effect a complete carrying operation?

A. It comes from a movement of the drawer of that machine which is pushed in by hand.

Cross-examination closed.

Re-direct Examination by Mr. Dunham.

R-D. Q. 76. Please refer to X-Q. 60, and state whether you find in claims 47, 48, 49 and 52 of Felt patent 568,021 any mention of or reference to the keys, or to a separate bank of keys for each denominational order?

A. There is no such mention or reference in any one of these claims.

R-D. Q. 77. What bearing, if any, has the use of a separate bank of keys for each denominational order, on the subject-matter of claims 47, 48, 49 and 52 of Felt patent 568,021?

A. A separate bank of keys as thus described has no

Deposition of Defendant's Witness, Robert Magrane.

bearing whatever upon the structure or the operation of the carrying mechanism.

R-D. Q. 78. How would you classify the machine of the Hopkins patent with respect to defendant's machine and the machine of Felt patent 568,021?

A. This particular Hopkins patent No. 517,383, which was granted March 24, 1894, on an application filed October 4, 1892, is of the same general class as each of the other machines. It is an adding and listing machine. All three of these machines will print the items as they are registered in the machine, and will, upon subsequent manipulation, print the total of said items. All machines of this type and which do this listing are particularly distinguished in the Patent Office as "Recorders".

R-D. Q. 79. Please state whether or not in the machine of the Hopkins patent there is "need for detaining the carrying operation until after the prime actuation of the numeral wheels to which carryings are to be transmitted"?

A. Yes, there is such need. The Hopkins' mechanism would be inoperative unless the carrying were so deferred.

R-D. Q. 80. Please refer to X-Q. 67 and state whether or not you find, in the claims in suit in Felt patent 568,021, any reference to the application of power before or after the latching and unlatching of the carrying levers?

A. In claims 47 and 48 is included as an element in each claim "devices for moving the levers into position for carrying". This power is applied to move the levers to their latched position. This is the only movement provided for in these claims which require power, neglecting the movement of the latch itself. I have already quoted Mr. Felt's description of the movement of the carrying levers into three different positions. This was of help at the time in describing the objects secured by

Deposition of Defendant's Witness, Robert Magrane.

the carrying mechanism. To go into the question still further, there are four different positions which this carrying lever assumes, and this is equally true of the Wythe, the Hopkins and the Felt machines. The first position is where the carrying lever is retracted to its farthest position; the second is where it has been allowed to rest upon its detaining lach; the third is where it has been permitted to move a short distance beyond the latch so as to escape reengagement therewith; the fourth is where it has moved into engagement with the numeral wheel to effect the carriage.

The claims here in suit cover or call for only the second and third positions, that is, a carrying lever which is adapted to be held in the second and in the third positions. The question of whether the power to move the numeral wheels in a carrying operation is stored in the mechanism before or after it has assumed the second and third positions is wholly immaterial. It is only necessary that the power be there when it is needed. That power is needed only after the lever has left the third position. It is old to store the power to effect a carrying operation before the lever is latched in its carrying position. Such a mechanism has already been described in patent to Felt No. 465,255. In the Wythe patent cited the power to effect the carrying, or the greater part of it, is stored after the latching of the carrying levers. In either case there is absolutely no difference in the functioning of the particular parts of the mechanism included in the claims. I am referring now to the Felt patent No. 568,021, in which the power is stored before the latching takes place and the Wythe patent.

R-D. Q. 81. Please refer to X-Q. 73 and state in what part or parts of the machine of the Wythe patent is stored "the power necessary to move the wheel * * *"?

A. This question cannot be fairly answered without

Deposition of Defendant's Witness, Robert Magrane.

consideration of the entire carrying mechanism of the Wythe patent, which I have not yet taken up in detail.

The transfer mechanism is best disclosed in Figs. 4, 5 and 6 of the Wythe patent. The numeral heels F, to which are attached the pinion *f*, rotate loosely upon the shaft F′. Alongside of each numeral wheel is a member having three radial arms marked *h*, h^3 and h^9 respectively. This member is also mounted loosely upon the shaft. Attached to the shaft and rotating with it are arms F^2 and a series of pins *f′*, best shown in Figs. 10 and 11. The radial arms *h* and h^3 are joined by stepped quadrant, generally helical in form, and also by a sleeve surrounding the shaft F′, as shown in Fig. 12. Upon the arm H is pivoted a small lever h^4 which engages the tail of a pawl h^6, pivoted on the same arm. The oscillation of the lever h^4 is adapted to throw the pawl into and out of engagement with its respective pinion *f*. Swiveled to the inner end of the lever h^4 is a shackle *h*, *h*, by means of which a spring I, coiled about the sleeve *H* and attached to the shackle, the lever h^4 may be moved. As shown in Fig. 5, the other end of this spring is anchored to the lever J. The carrying system consists of a frame P′, carrying lever p^2 with spring pressed carrying pawls p^3, one for each wheel, except the unit wheel, and the lug p^6, all pivoted upon the shaft P. The carrying latches are shown at *r*, having tails at *r′* and pivoted upon shaft E. These latches are actuated against the tension of their springs e^2 by means of the pins f^2 attached to the numeral wheels. The shaft P, as shown in Fig. 6, is moved by means of a cam N fastened to shaft F′, and transmitting motion to an arm *p* fastened to shaft P. The arm *p* moves upward when permitted under the tension of a spring p^9. The shaft P carries a series of pins p^5 which are adapted to move the carrying frame levers mounted loosely upon the shaft P. To the ex-

Deposition of Defendant's Witness, Robert Magrane.

tremity of each of these pins is attached a carrying spring p^4 attached to the carrying lever p^2.

Fig. 4 shows the machine at rest. In this position, as is shown in Fig. 10, the pins f' upon the shaft F′ take the entire tension of the spring I and hold the pawl h^6 free from engagement with the pinion, as shown in that figure. Upon the depression of any one of the keys of the machine by mechanism, that need not here be described, the shaft F′ is caused to rotate in an anti-clockwise direction about 100 degrees. At the first instant of motion the pins f' move away from the shackle h', and the full power of the spring I is thrown directly upon lever h^4 and operates to lock the pawl and pinion together. The full power of the spring I is thrown upon this lock because the fulcrums of the lever h^4 and the pawl p^6 are located in the radial arm h, and that arm being joined with the arm h^9 is held from movement as the arm h^9 is locked by a pin k in the lever J. As the shaft F′ continues its movement the arm F^2, attached to the shaft, moves from the position shown in Fig. 4 to the position shown in Fig. 5, thereby unlocking the arm h^9 by camming upward the pin k. The effect of this is to allow the spring I to move the radial arm and quadrant h^2 in an anti-clockwise direction until one of the steps upon the quadrant comes into contact with a stop b^2, which has been thrown into its path by the motion of the key lever previously referred to. As soon as this step is arrested by the key stop b^2, the quadrant and the attached radial arms are locked from further movement. In consequence of this the two fulcrums above referred to are once more held stationary, and the entire power remaining in the spring I is again applied to the locking pawl h^6. During the above movement the numeral wheel pinion has been advanced to the degree corresponding with the key depressed. It will be noticed that the operation of these parts as just

Deposition of Defendant's Witness, Robert Magrane.

described prevents any substantial overthrow of the numeral wheel pinion; for whenever the arm h is held from movement the full power of the spring I is applied to the locking pawl h^6. The greater the power of the spring I the more certain any overthrow is prevented, for as soon as the spring ceases its work of rotating the arm h the whole force of the spring is instantly diverted to lock the pawl h^6 firmly in place, and as this pawl is directly pivoted to the same arm, and that arm is rigidly locked, the wheel can not move farther. The small friction brake j is pivoted to shaft J′ and is normally in contact with the pinion, owing to the pressure of spring j'. This particular brake is used in many forms of adding machines for the purpose of exactly aligning the numeral wheels. Owing to lost motion of parts and wear in operation, the adding wheels of a register will sometimes be retarded to a position slightly less than normal or advanced to a position slightly more than normal, in which cases the settling of the rollers constituting the spring brake brings the wheels into exact alignment. This, or equivalent, devices are in universal use on all adding machines.

Upon the return movement of the shaft F′ the pins f' contact with the shackles described, relieving the locking pawls h^6 from the pressure of the spring and moving them from engagement with their respective pinions. The angular movement of these pins is then communicated to the arms h, and this part of the mechanism is restored to its original position.

Referring now to Fig. 6, the first described movement of the shaft F′ in an anti-clockwise direction by means of cam N moves the arm p downwardly, thereby rotating shaft P. By means of the pins p^5 the levers p^2 are moved in a clockwise direction until their respective lugs p^6 move within the latches r. This is the first position assumed by the carrying levers. By means of the

Deposition of Defendant's Witness, Robert Magrane.

auxiliary cam n^2, pivoted upon the main cam N, the arm p and shaft P are given a slight movement in an anti-clockwise direction. By this means the pins p^5 attached to the shaft put the springs p^4 under a slight tension, which causes the lugs p^6 to settle upon their respective latches r. Subsequently to this the motion of the numeral wheels already described takes place, and should one of the pins f^2 trip the latch r, the lug p^6 will escape from the latch and move a few degrees, owing to the same tension given to spring p^4.

When the shaft F′ is then rotated in a clockwise direction to its original position the arm p is raised from the position shown in Fig. 6, and the springs p^4 are put under a greater tension. At about this time, as before described, the locking pawls h^6 have been withdrawn from the numeral wheel pinions on the return movement, thus leaving these pinions free to be turned by the carrying pawl p^8. An overthrow prevented p^8 is formed on carrying lever p^2, which prevents the carrying mechanism from moving the pinion more than one unit.

The carrying lever assumed its second position when it was brought into contact with the latch r. It assumed its third position when it escaped from the latch, but remained in juxtaposition thereto. It assumed its fourth position when it moved forward to engage the numeral wheel pinion to effect the carrying.

As will now be clear, the power necessary to move the wheel in this patent is stored in the spring p^4, and it is done by means of the cam N and the auxiliary came n^2, both of which cams are like those in the Felt patent No. 568,021, where the same functions are performed. I have spoken of the power "stored" in the spring p^4. In the case of what is technically known as snap carrying the spring p^4 is stretched to its utmost extent before the carrying takes place. It is also the case when the

Deposition of Defendant's Witness, Robert Magrane.

numeral wheels are not advanced by the keys more than one or two digits at a time that these same springs are stretched almost to their limit before the carrying can take place. This is obvious from the fact that the numeral wheels remain locked by the locking pawls h^6 until the pins f' have withdrawn the locking pawls from the pinions. Where, for example, a numeral wheel is moved one unit, due to the depression of the numeral key "1," the part h has an angular movement of only about nine degrees, whereas the shaft F' and its pins f' go through the full rocking movement each way of about 100 degrees. Under these conditions the shaft F' passes through about ninety degrees of its reverse movement before the pin f' contacts with the shackle and releases the locking pawl from the numeral wheel. During all of this movement the springs p^4 are being put under tension, and this storing of power is practically completed before the carrying can take place.

It is stipulated and agreed between counsel that amendment may be made to defendant's answer hereafter, with the same force and effect as if amended of this date by order of the court.

Deposition closed.

Adjourned to meet pursuant to further notice.

ROBERT MAGRANE.

IN THE SUPREME COURT OF THE DISTRICT OF COLUMBIA.

Comtograph Company,
Plaintiff,
vs.
Adder Machine Company,
Defendant.
} In Equity, No. 29,220.

Testimony taken on behalf of the defendant in the above entitled cause, pursuant to agreement, at the offices of Messrs. Kerr, Pake, Cooper & Hayward, Room 2905 Singer Building, 149 Broadway, New York, N. Y., commencing at 11 A. M. on Monday, September 11, 1911, before M. Lawson Dyer, a notary public duly qualified.

Present: Henry Love Clarke, Esq., for complainant; Jonathan B. Hayward, Esq., and Drury W. Cooper, Esq., for defendant.

Deposition of Defendant's Witness, Arthur S. Browne.

ARTHUR S. BROWNE, a witness produced on behalf of the defendant, being first duly sworn, deposes as follows in answer to interrogatories of counsel:

Q. 1. Please state your name, age, residence and occupation.

A. Arthur S. Browne; 50 years; Washington, D. C., patent solicitor and expert.

Q. 2. Please state your qualification as an expert to testify in patent causes?

A. I was graduated from Dartmouth College in 1881, and in the following year I entered my present profession in which I have since been actively and continuously engaged. I have prepared and prosecuted many hundreds of applications for patents, and have made numerous investigations for the purpose of giving opinions concerning the novelty of inventions and the scope, valid-

Deposition of Defendant's Witness, Arthur S. Browne.

ity and infringement of patents. I have testified in more than three hundred patent suits in the United States courts as a patent expert. I have frequently visited workshops and factories for practical experience.

Q. 3. Have you read and do you understand the Felt patent in suit No. 628,176, dated July 4, 1899, which is here in suit?

A. Yes.

Q. 4. Have you examined the "Complainant's Exhibit Defendant's Machine," and do you understand the general operation of it and the construction of the printing mechanism thereof?

A. Yes.

Q. 5. I show you a machine which the notary is requested to mark "Defendant's Exhibit, Defendant's Narrow Roll Machine," and ask you if you are familiar with the construction and operation of the printing mechanism thereof?

By Mr. CLARKE: Objected to as irrelevant and immaterial.

A. Yes.

Defendant's counsel introduce in evidence the machine just above referred to to be marked "Defendant's Exhibit, Defendant's Narrow Roll Machine." Objected to as irrelevant and immaterial.

It is stipulated by and between counsel that the exhibit machine just introduced in evidence is a machine which was manufactured by the defendant; but complainant's counsel does not waive his above objection to the offer of the exhibit.

Q. 6. Please state whether or not you find in Complainant's Exhibit, Defendant's Machine, the subject matter of claims 1, 2 and 4 of the Felt patent 628,176 here in suit, or any novelty in that subject matter in view of what is shown in the patents to Hiett No. 580,863, April 20, 1897, and Pike, No. 595,864, December 21, 1897?

A. The defendant's machine does not have the subject

Deposition of Defendant's Witness, Arthur S. Browne.

matter of claim 2 of the Felt patent in suit, No. 628,176, because it does not have any "devices for impressing the paper upon the type" as called for by that claim.

Defendant's machine does not have the subject matter of claim 4 of the Felt patent in suit, because it does not have "mechanism for shifting the carriage laterally the width of a column-space," as called for by that claim.

Defendant's machine has the subject matter of claim 1 of the Felt patent in suit, but that subject matter is lacking in novelty, since it is also present in the machine of the Hiett patent No. 580,863, and in the machine of the Pike patent No. 595,864.

The subject matter of claim 2 of the Felt patent No. 628,176, is likewise lacking in novelty, since it is present in the prior patent of Hiett No. 580,863.

The subject matter of claim 4 of the Felt patent in suit is not present in either the machine of the Hiett patent or the machine of the Pike patent for the same reason that it is not present in the defendant's machine, namely, because in neither the Hiett machine nor the Pike machine is there any "mechanism for shifting the carriage laterally the width of a column-space" and, accordingly, there is a novelty in the subject matter of claim 4 so far as the Hiett and Pike patents are concerned which, however, is not present in the defendant's machine.

The Pike patent does not have the subject matter of the claim 2 of the Felt patent in suit for the same reason that defendant's machine lacks that subject matter, namely, because the machine of the Pike patent does not have "devices for impressing the paper upon the type" as called for by that claim.

I will give my reasons in detail for the conclusions which I have just stated:

Deposition of Defendant's Witness, Arthur S. Browne.

Defendant's Machine.

The defendant's machine in its entirety is an exceedingly complicated machine, but most of the complication requires no discussion in connection with the subject matter of the pertinent claims of the Felt patent in suit. Indeed, the only portions of the mechanism of the defendant's machine which require to be considered in a comparison with the subject matter of the pertinent Felt claims are quite simple and readily understood.

In order to simplify consideration of the comparison between defendant's machine and the Felt patent, and to eliminate as far as possible a consideration of irrelevant matters, I will first call attention to the differences between Complainant's Exhibit, Defendant's Machine, and one of the narrow roll machines of defendant's manufacture such as is exemplified by Defendant's Exhibit, Defendant's Narrow Roll Machine.

To facilitate the identification of these two exhibits I will call "Complainant's Exhibit, Defendant's Machine," *defendant's wide carriage machine;* and I will refer to the other exhibit as *defendant's narrow roll machine.*

Defendant's narrow roll machine is capable of printing a single column of numerals only, and it does not have the subject matter of any one of claims 1, 2 and 4 of the Felt patent in suit, because it does not have "a laterally movable paper carriage" as called for by each of said claims, and hence has none of the other characteristics of the Felt patent which are due to the presence of the laterally movable paper carriage.

Accordingly, if defendant's wide carriage machine possesses the subject matter of any one of the pertinent claims of the Felt patent in suit it is because of the differences which it has over the narrow roll machine.

So far as the two machines act to set the types in posi-

Deposition of Defendant's Witness, Arthur S. Browne.

tion to do the printing; to move the types to print; and to make the computations within their capacity they are like each other in construction, organization and mode of operation, except that the wide carriage machine is capable of printing a larger number of numbers side by side, since it has nine rows of keys instead of only seven rows of keys as in the case of the narrow roll machine.

In both machines the depression of keys on the keyboard determines the positioning of the desired number types side by side at the rear of the machine. In both machines the printing is done by then pulling on a lever at the right, which causes the desired type to be brought to the printing line side by side and to be thrust backwardly against an inking ribbon, thus forcing the inking ribbon against the paper, thereby doing the printing. In both machines the paper is supported in printing position and against the impact of the types by means of a rotatable platen. When the printing lever is restored to its normal position the platen is rotated one step so as to feed the paper a sufficient distance to enable the next row of numbers to be printed immediately beneath the row of numbers just impressed. This feeding movement is lengthwise of the paper, and as it corresponds with the feed which takes place in an ordinary typewriter to enable lines to be printed one beneath another it will be convenient to refer to this as the "line spacing" movement, adopting that term from the typewriter art.

In both of defendant's machines under consideration this line spacing movement is effected in the same way. Each machine has a reciprocating actuating bar which extends rearwardly beyond the casing at the back of the machine below the paper-controlling mechanism, and this actuating bar is reciprocated back and forth as the result of the movements of the printing lever. In each machine this actuating bar engages a horizontally extending

Deposition of Defendant's Witness, Arthur S. Browne.

bar or bail which is pivotally mounted and is pressed toward the actuating bar by a spring. This swinging bail is operatively connected with the paper supporting roll or platen, so that as the bail is swung rearwardly out of movement of the actuating bar the platen is rotated so as to give the line-spacing movement to the paper. The operative connections between the swinging bail and the platen are the same in both machines.

In order to convert the narrow roll machine into a wide carriage machine no alteration is required at all in any of the mechanism which sets the type or causes it to print, or which reciprocates the line spacing actuating bar. Nor is any alteration required in any of the computing mechanisms of the machine. All that is necessary to do is to make the platen and the swinging bail long enough to provide for the width of paper upon which columns of numbers are to be printed, to mount them and their immediately associated devices in a carriage capable of moving laterally, and to provide the casing of the machine with appropriate guideways to enable the carriage to be moved laterally. In other words, if one of defendant's narrow roll machines is provided with the necessary guide-ways for a carriage, the laterally sliding paper carriage, such as employed in defendant's wide carriage machine, could be directly applied thereto without further change. It will be noted that the swinging bail employed on the carriage of defendant's wide carriage machine is long enough so that it is in register wtih the line-spacing actuating bar in whatever position the carriage may occupy.

The important differences therefore which exist between these two machines of defendant are as follows:

(1) The casing of the machine is provided at the rear with guideways for the laterally moving paper carriage.

Deposition of Defendant's Witness, Arthur S. Browne.

(2) A sliding carriage is mounted to slide on these guideways.

(3) The platen is made long enough to receive the desired width of the paper.

(4) The swinging bail with which the actuating bar co-operates is mounted in the carriage and is made as long as the platen.

(5) The intermediate connections between the bail and the platen are mounted on the carriage.

(6) The paper passes between the platen and a co-operating spring-pressed feed roller in both machines, and this co-operating roller is made as long as the platen.

These are all of the differences which are essential to enable the numbers to be printed in parallel column.

The defendant's wide paper carriage has, in addition, a special feature in connection with its function of printing parallel columns, which, however, is not important in comparing defendant's wide carriage machine with the Felt patent in suit; namely, defendant's wide carriage machine has a spring-held hand-rocked gauge bar having notches along its upper edge spaced apart at proper distances to determine the spacing of the columns on the paper. These notches on the gauge bar co-operate with a single projecting fixed stud on the casing of the machine so as to securely retain the carriage in any one of its laterally adjusted positions. The gauge bar is carried on a rock shaft and is normally held by its spring in position to maintain one of its notches in engagement with the fixed locking stud. In order to shift the carriage laterally the user rocks the gauge bar backwardly by means of an external knob provided for the purpose so as to disengage the gauge bar from the rocking stud and then the carriage can be slid laterally back and forth by hand. By relieving the knob of pressure the spring holds the gauge bar against the locking stud until the carriage is slid by

Deposition of Defendant's Witness, Arthur S. Browne.

hand far enough to bring one of the notches in the gauge bar in register with the locking stud, whereupon the gauge bar is swung into place to lock the carriage in a definite position. The machine of the Felt patent in suit has no devices for locking the carriage in definite positions, and, consequently this characteristic of defendant's wide carriage machine is relevant only in differentiating defendant's wide carriage machine from the Felt patent.

Likewise, defendant's wide carriage machine is equipped with a holder for a narrow roll of paper so that it may be used either as a narrow roll or as a sheet machine, but this is simply another feature of difference as compared with the Felt patent in suit.

There are some minor structural differences between defendant's two machines which do not require comment because they have no bearing upon the subject matter of the pertinent claims of the Felt patent in suit. For example, the actuating bars of defendant's two machines are differently shaped at their projecting ends, and the co-operating feed rolls which press the paper against the platen are differently mounted.

This comparison between defendant's two machines shows the simple character of the changes which are necessary to convert the narrow roll machine printing a single column into a wide carriage machine capable of printing several columns of figures.

Defendant's Machine Compared With Claim 2 of the Felt Patent.

As already stated defendant's wide carriage machine does not have the subject matter of claim 2, because it does not have "devices for impressing the paper upon the type." In the defendant's machine the paper is maintained in a fixed position by the platen during the act of printing. The printing is done by moving the type to-

Deposition of Defendant's Witness, Arthur S. Browne.

ward the paper. The types are thus moved against the inking ribbon and force the ribbon against the paper thus doing the printing. The claim, on the other hand, requires "devices for impressing the paper upon the type," whereas defendant's wide carriage machine has "devices for impressing the type upon the paper.

In this respect (as will hereinafter appear) defendant's wide carriage machine is like the prior patent of Pike No. 595,864, December 21, 1897.

Both Pike and defendant have a roller platen which constitutes "a support for a sheet of paper to be print-adapted to be set in different positions opposite the printing type" as recited, for example, in claim 1 of the Pike patent, and this support holds the paper immovable while the type are moved toward the paper to impress the same. On the contrary, the Felt patent has no platen to support the paper against the impact of the type, but, on the other hand, Felt's paper is entirely free at the printing line and is forced against the paper by movable hammers which come in contact with the rear of the paper and force the paper towards the type in order to do the printing. The Felt patent in suit states that the parts briefly described in column 2 of page 1 of the specification (including the devices which immediately do the printing) are like the corresponding devices of his prior patent No. 568,021, September 22, 1896, to which I will refer because it more clearly illustrates the printing action. As shown in Fig. 4 of the drawing of patent 568,021, the paper W passes downwardly between feed rolls I^4 and I^6a and thence upwardly between rolls I^4 and I^5. The paper thus occupies a folded position with two layers between the types carried by segments F and hammers G. When printing is to be done the hammers G force both layers of the paper toward the type and the front face of the front layer of paper is printed by the types. Fig. 17 shows

Deposition of Defendant's Witness, Arthur S. Browne.

one of the hammers in position for bringing the two layers of paper against each other during the printing operation. A similar construction is shown in Fig. 2 of the drawings of the Felt patent in suit, in which the hammers are shown at 22 and the feed rolls at B, B′, B².

As shown in Fig. 4 of the drawings of the Felt patent No. 569,021, an inking ribbon lies between the front layer of the paper and the types, and a thin rubber sheet to soften the blow of the hammer lies between the hammers G and the rear layer of paper so that specifically the printing is done by the hammers forcing the rubber sheet against the rear layer of paper, and both layers of paper toward the inking ribbon and the inking ribbon against the type.

Accordingly, Felt prints by impressing the paper upon the type and his hammers G (as designated in the patent 628,176) and their actuating instrumentalities constitute "devices for impressing the paper upon the type" as called for by claim 2.

Defendant's wide carriage machine has no such devices and no such mode of operation, but like the Pike patent, defendant supports his paper immovably during the printing operation by the platen and the type are impressed upon the paper.

This difference between Pike and Felt (and hence between the defendant and Felt) is pointed out by Mr. Felt in one of his depositions stipulated into this case. Mr. Felt was questioned concerning claim 1 of the Pike patent No. 595,864, and was asked this question concerning it:

> "R-D-Q. 405. If you can do so, please point out any requirement or element or feature or features of construction mentioned in the foregoing claim not found in the 1890 Felt machine or the tabulator comptographs subsequently manufactured."

In answer Mr. Felt said:

Deposition of Defendant's Witness, Arthur S. Browne.

"A. The claim specifies 'a support for a sheet of paper to be printed adapted to be set in different positions opposite the printing type.' In the patent the support here referred to can be nothing else than the roller F, which is referred to in the specification, page 3, lines 23 to 26, as follows:

> 'a platen or support for a sheet of paper, means for supporting the said platen so that it can be set in different positions opposite the type.'

In the 1890 model, or any of the subsequently made comptographs, there is no 'platen or support' of this kind, which is one that provides a support to the paper against the impressing impulse of the hammers. The comptograph has no platen nor does, in the comptograph, either one of the opposing impressing devices have any movement into different positions with relation to one another, the type being one and the hammers the other of these opposing impressing devices."

And Mr. Felt further testified as follows:

> "R-D-Q. 407. In your machine—the 1890 machine—and the subsequent comptograph tabulators, the opposing devices between which the paper is pressed in the act of printing are the type on the one side of the paper and the hammers on the other side, and these hammers are not 'adapted to be set in different positions opposite the printing type'; is that right?
>
> A. That is correct."

Exactly these same considerations which distinguish Felt from Pike also distinguish Felt from defendant's machine.

In his application for the patent in suit Felt originally presented a claim No. 2 directed to the same subject matter as claim 2 of his patent, but which did not contain the recitation "devices for impressing the paper upon the type," and which read as follows:

> "2. The combination with the printing mechanism and its actuating devices, of a laterally movable carriage, paper rolls mounted in said carriage, and

Deposition of Defendant's Witness, Arthur S. Browne.

> mechanism connected to said actuating devices and serving to operate the paper rolls in feeding the paper in the line spacing movements, substantially as specified."

This claim and original claim 1 were rejected by the patent office on July 27, 1898, on the Pike patent No. 595,864.

On February 13, 1899, an amendment was presented including a substitution of patented claim 2 with its limitation to "devices for impressing the paper upon the type" for original claim 2 which did not contain that limitation. This amendment was accompanied by an affidavit of Felt asserting priority of invention over Pike, and by remarks asserting a distinction over Pike for the purpose of avoiding an interference contest which would have been instituted by the patent office in case Falt had made claims commensurate with any claims in the Pike patent. In these remarks the following considerations were urged:

> "While the new claims 1 and 2 are intentionally made broad, and probably broad enough to cover Pike's construction, and also the construction set forth in Hiett's patent No. 580,863, April 20, 1897 (which by the way is also too late in date to serve as a reference as the examiner will see by the affidavit), yet we do not think they are laid to the same matter as any claim in either of those patents. The first claim of Pike is nearest in this respect, and yet it specifies as an element 'a support for a sheet of paper to be printed adapted to be set opposite the printing type,' a feature which neither applicant or Hiett shows, but which Pike was obliged to insert in his claim to avoid a rejection upon Hiett. That the support referred to in the language quoted is the platen is obvious from the matter beginning on line 24, page 3, of Pike's specification."

Claim 2 of the Felt patent in suit is thus directed to a specific difference compared with Pike, namely, Felt's "devices for impressing the paper upon the type" and

Deposition of Defendant's Witness, Arthur S. Browne.

defendant's wide carriage machine contains no such devices, but on the contrary has a supporting platen for his paper, and impresses the type upon the paper just as Pike did.

In every printing operation the paper must have some support to oppose the pressure involved in printing. If the type prints on one face of the paper, the opposite face of the paper must be backed up by something. In Felt patent the two opposing members on the opposite sides of the paper are the type and the hammers; whereas in defendant's machine the opposing members are the type and the platen. Now, as Mr. Felt has already pointed out in his answers which I have quoted, neither his type nor his hammers have any lateral movement, but both maintain their positions during the lateral shift of the paper and its carriage. On the other hand, in the defendant's machine, as in the Pike patent, the platen moves laterally with the carriage mounted thereupon.

One difference may be pointed out between the two arrangements. In the defendant's machine carbon copies can be made as in any ordinary typewriter. Carbon copies cannot be efficiently made in a machine like that of the Felt patent because the sheet is folded and during a portion at least of the printing two layers of paper are presented between the hammers and the type so that if two sheets should be inserted with carbon sheets between them there would be double printing done when two layers of each sheet were between the hammers and the type.

According, for the reasons stated, defendant's wide carriage machine does not have the subject matter of claim 2 of the Felt patent in suit, because it has no "devices for impressing the paper upon the type" as demanded by that claim.

Deposition of Defendant's Witness, Arthur S. Browne

Defendant's Machine Compared With Claim 4 of the Felt Patent.

Defendant's wide carriage machine does not have the subject matter of claim 4 of the Felt patent, because it does not have "mechanism for shifting the carriage laterally the width of a column space." On the other hand, the shifting of the carriage laterally is done solely by hand, and whether it is shifted the width of a column space or more or less depends entirely upon the wish and care of the user. In order to shift defendant's carriage laterally the user takes hold of the knob of the gauge bar and turns the gauge bar back so as to unlock it from the locking stud and then the carriage can be freely moved in either direction as far as desired within its range of movement. It may be moved the width of a column space or more or less, as the user desires. If the user desires to get column spaces of the exact width determined by the notches in the gauge bar, and if he is satisfied with the consequent distribution of the columns on the paper he can by appropriate manipulation leave the carriage in any one of its locked positions so that the carriage cannot be accidentally shifted during the printing. He is not, however, limited to this particular column spacing, but can use a column as wide or as narrow as he may desire. And in every case the extent of the lateral shift is dependent upon the extent to which the user moves the carriage by hand. There is no "mechanism" for moving the carriage; and much less is there any mechanism which is organized so as to shift the carriage laterally "the width of a column space."

On the other hand, the Felt patent describes a train of mechanical devices by means of which the carriage is shifted laterally the exact width of the column space for which the mechanism is designed.

Deposition of Defendant's Witness, Arthur S. Browne.

In addition to the mechanism provided for this specific purpose, and which is recited in claim 4, Felt also contemplates shifting his carriage by hand. When the machine of the Felt patent is at rest the carriage is not locked at all but is free to be moved by hand in either direction. The specification says:

> "In the intervals between these shifting operations the carriage may be moved freely in either direction by hand, as the pawl E^6 is normally out of engagement." (P. 2, line 130.)

When the Felt carriage is thus moved by hand it can be moved to any distance the user desires, and whether or not the columns are spaced to any definite width depends entirely upon the manipulation of the user.

In addition, Felt discloses a specific mechanism which not only shifts the carriage laterally but also for a definite column space width, and it is this mechanism that is recited in claim 4.

For this purpose Felt has a handle E shown in Fig. 1 of his drawings which is on a rock shaft E′, and by means of which said shaft may be rocked. As shown in Fig. 3 this rock shaft has a crank arm E^2 connected by a rod E^3 with an elbow lever E^4. As shown in Fig. 5 this elbow lever E^4 carries a pawl E^6 which is adapted to cooperated with notches E^9 in one edge of one of the longitudinal members of the paper carriage frame. When the handle lever E is moved in the proper direction the pawl E^6 engages the neighboring notch E^9 and during the completion of the movement of the hand lever the carriage is moved a definite space, which is the width of the column space for which the machine is particularly designed. This mechanism is described on page 2 at lines 95 to 129.

This mechanism it will be noted is a train of mechanical devices which serves to shift the carriage laterally

Deposition of Defendant's Witness, Arthur S. Browne.

without requiring any direct hand manipulation of the carriage; and its action is to move the carriage the width of a column space. Assume, for example, that the machine is capable of printing seven columns on a sheet, and that it is desired to print only two columns of figures at the two margins of the sheet, then it would be necessary to manipulate the handle of this mechanism six times in order to shift the paper from the first to the eleventh column, because the mechanism is organized to shift the carriage for the width of one column space only. On the other hand, where the carriage is moved directly by hand, as in defendant's machine, the carriage can be moved at a single stroke throughout its entire range of movement.

Claim 4 of the Felt patent is thus directed to an organization which is not present in the defendant's machine, which does not contain the subject matter of the claim because it does not have the required "mechanism for shifting the carriage laterally the width of a column space."

Claim 1 of Felt Compared With Hiett's Patent No. 580,863.

As I stated at the outset of this answer defendant's machine does have the subject matter of claim 1 of the Felt patent in suit, but that subject matter is present in the machine of the Hiett patent No. 580,863.

The calculating machine of the Hiett patent is organized to do the same work as the machine of the Felt patent in suit, namely, to print parallel columns of figures and with calculated results.

The presence of the subject matter of claim 1 of the Felt patent in the machine of the Hiett patent will be evident upon an analysis of the claim.

Deposition of Defendant's Witness, Arthur S. Browne.

The claim calls for a combination of the following characteristics:

(1) "The printing mechanism adapted to print two or more characters side by side." Hiett has a plurality of printing segments 65, shown in Figs. 5, 6, 7 and 16, each of which carries a plurality of type for printing numbers, as well as shown in Fig. 16. There are nine of these segments as shown in Fig. 16, so that a single number having nine digits can be printed. An inking ribbon 72 extends over the type at the printing line, as shown in Figs. 7, 16 and 17. As indicated in Fig. 7 the paper 77 extends above the inking ribbon. The printing is effected by means of a hammer 78 located above the horizontal run of the paper, as shown in Figs. 6 and 7. The printing is done by forcing the hammer down against the paper and upon the inking ribbon, and the inking ribbon upon the type so that the paper is impressed upon the type as in the machine of the Felt patent in suit. This mechanism is "printing mechanism adapted to print two or more characters side by side" as called for by the first recitation of claim 1 of the Felt patent.

(2) "A laterally movable paper carriage." Hiett has such a carriage at 95 as well shown in Fig. 16 and as described at the top of page 6. The specification says that:

> "By this construction when a column of figures has been printed and it is desired to print another column on the same sheet or leaf, it is only necessary to move the spring out of its notch and to slide the feed roll 90 and frame 95 longitudinally the shaft until the spring 94 engages with the other recess 93." (P. 6, line 10.)

(3) Devices for feeding the paper longitudinally mounted in said carriage. This has reference to instrumentalities for effecting line spacing. Hiett has such line spacing feeding means mounted in his carriage consisting of feed roller 90 and its co-operating idle roller

Deposition of Defendant's Witness, Arthur S. Browne.

91 (shown in Fig. 6) between which the paper passes. The specification says:

> "91 indicates an idle-roller, between which and the roller 90 the feed of the paper is effected." (P. 5, line 125.)

(4) Automatic mechanism acting in any position of the carriage to actuate said feeding devices in the line spacing movement.

The shaft on which the feed roller 90 is mounted is grooved longitudinally and the feed roller is keyed thereon thereby permitting the feed roller to slide longitudinally on the shaft during the lateral movement of the carriage frame 95. This shaft has a ratchet wheel 89, shown in Fig. 16 and Fig. 7 with which co-operates a feed pawl 88 on an arm 87. This arm 87 is operatively connected with the operating lever 22 of the machine (see Fig. 7) so that after a line of numbers has been printed the feed roller 90 is rotated through its line spacing distance. This line spacing mechanism is adapted to actuate the feeding devices in any position which the carriage may occupy because of the splined connection between the feed roll 90 and the shaft on which the ratchet 89 is mounted.

These are all of the features recited in claim 1 of the Felt patent in suit, and are all present in the Hiett patent combined together in the same way and produce the same result.

Accordingly, the Hiett patent has the subject matter of claim 1 and that subject matter presents no novelty over Hiett which is present in defendant's wide carriage machine.

Adjourned to Tuesday, September 12, 1911, at 10 A. M.

Deposition of Defendant's Witness, Arthur S. Browne.

NEW YORK, Sept. 12, 1911.

Met pursuant to adjournment.

Present: Counsel as before.

Witness Browne continues his answer to Q. 6.

A. Claim 1 of Felt compared with Pike patent No. 595,864.

The subject matter of claim 1 of Felt is present in the Pike patent which says:

> "It is the object of my present invention to provide a device adapted to receive comparatively wide sheets of paper of any desired length upon which the items to be listed may be printed in successive parallel longitudinal columns side by side and any desired length, the length of the columns being regulated as desired within the limits of the length of the sheet of paper employed." (P. 1, lines 55-60.)

The presence of the subject of claim 1 of Felt in the machine of the Pike patent is shown by the following analysis of the claim which calls for a combination of the following characteristics:

(1) "The printing mechanism adapted to print two or more characters side by side." The Pike specification says "there are nine of such series or rows of types arranged side by side and close together, one row corresponding to and co-operating with each of the rows of keys B." (P. 2, line 55.) Certain of the type bars are shown at D in Fig. 1, which are carried by one of the sector plates E. The paper to be printed is supported at the printing line by a platen F. The printing action is described at page 2, lines 80-100. It is sufficient to say that the proper keys B (Figs. 1 and 2) are depressed and the printing lever C (Fig. 1) is drawn forward, and as the result the proper types corresponding with the keys which have been depressed are brought to the printing line and are thrust rearwardly toward the paper on

Deposition of Defendant's Witness, Arthur S. Browne.

the platen and the print on the paper through an interposed inking ribbon. In this respect the printing mechanism similar to that of prior patents referred to in the specification. This printing mechanism is substantially like that of defendant's in organization and mode of operation. Accordingly, Pike has "printing mechanism adapted to print two or more characters side by side" as called for by the first recitation of claim 1 of the Felt patent.

(2) "A laterally movable paper carriage." Pike has such a carriage as is well shown in the several figures of the drawings. The platen F which supports the paper during the printing and its co-operating spring-pressed idle feed roller H^4 (Figs. 10, 11 and 12) are sufficiently long to receive a wide sheet of paper capable of having printed on it several columns of figures, as shown in Figs. 4 and 5. This platen and feed roll are mounted in a rocking frame or paper carriage comprising the cross bar B′ and arms C′ (see Fig. 5) and having supporting arms which fit upon the horizontal fixed rod A′ so as to freely turn and slide longitudinally thereupon. In order to shift the carriage laterally it is turned by hand to the position shown in Fig. 7 and it may then be slid laterally to any desired extent within the capacity of the machine to enable different columns of numbers to be printed.

(3) "Devices for feeding the paper longitudinally mounted in said carriage." This has reference to instrumentalities for effecting line spacing. Pike has such line spacing feeding means mounted in his laterally shiftable carriage consisting of a platen F and its co-operating spring-pressed idle roller F^4. The platen is rotatable step by step, and when thus rotated the paper is fed longitudinally so that successive numbers may be printed one underneath another.

Deposition of Defendant's Witness, Arthur S. Browne.

(4) "Automatic mechanism acting in any position of the carriage to actuate said feeding devices in the line spacing movement." The platen F is rotated by means of rotary rollers M shown in Figs. 4, 5 and 12. The platen rests upon these rollers, the paper being between. Consequently when these rollers M are rotated the paper is fed longitudinally. The rollers M are mounted on a shaft L which has a ratchet N best shown in Fig. 11. This ratchet N is fed step by step by a pawl O (Fig. 11) which is operatively connected with the main operating lever C so that after the lever has effected the printing and when it is returning to the position of rest the ratchet pawl is moved in the proper direction to feed the paper longitudinally to the extent of the desired line space. These operative connections are described at lines 50-90 on page 3 of the specification. This automatic mechanism to actuate the paper feeding devices acts in any position of the carriage because in whatever position the carriage may be the platen F rests upon one or more of the drive rollers M.

These are all of the characteristics mentioned in claim 1 of the Felt patent in suit, and they are all present in the machine of the Pike patent combined in the same way to produce the same result, and consequently there is no novelty in the subject matter of that claim over the Pike patent which is present in the defendant's wide carriage machine.

Claim 2 of Felt Compared With Hiett Patent No. 580,863.

Claim 2 of the Felt patent recites the combination of devices, all of which have been considered in the foregoing comparison between the Hiett patent and claim 1 of Felt, with the exception of the "devices for impressing the paper upon the type" called for by claim 2. Omit-

Deposition of Defendant's Witness, Arthur S. Browne.

ting these devices the claim recites "a series of type arranged to print side by side, a laterally movable paper carriage adapted to position the paper for the different columns, feed rolls for moving the paper longitudinally past the type, and means for actuating said rolls." The presence of these characteristics in the Hiett patent have already been fully discussed. In brief resumé, Hiett has the series of type on the segments 65 (Fig. 16) arranged to print side by side, the laterally movable paper carriage 95 (Fig. 16) adapted to position the paper for the different columns, feed rolls 90 and 91 (Fig. 6) for moving the paper longitudinally past the type, and means for actuating said rolls consisting of the splined shaft carrying the ratchet 89 (Fig. 7) the feed pawl 88, the main operating lever 22 and the intermediate connecting devices between said lever and pawl. The additional element of claim 2 consists of "devices for impressing the paper upon the type." I have heretofore described the printing mechanism of the Hiett patent, and it suffices now to call attention to the fact that the hammer 78, shown in Figs. 6 and 7 of the Hiett patent descend upon the paper 77 and force it towards the type so that the paper is impressed upon the type; and that this hammer with its actuating mechanism constitutes "devices for impressing the paper upon the type" as called for by claim 2 of the Felt patent. Strictly speaking in both Hiett and Felt the paper is not impressed directly upon the type, but upon the inking ribbon interposed between the paper and the type, and, accordingly, the statement of the claim that the paper is impressed upon the type must be taken to include the presence of the interposed inking ribbon. In this respect Hiett and Felt are both alike.

Accordingly, the machine of the Hiett patent has the entire subject matter of claim 2 of the Felt patent in suit.

Deposition of Defendant's Witness, Arthur S. Browne.

CLAIM 2 OF FELT COMPARED WITH THE PIKE PATENT NO. 595,864, DECEMBER 21, 1897.

The Pike patent does not have the subject matter of claim 2 of Felt for the same reason that the defendant's wide carriage machine does not have that subject matter, namely, because Pike does not have "devices for impressing the paper upon the type" as called for by the claim, but, on the contrary, has devices for impressing the type upon the paper through an interposed inking ribbon just like defendant's wide carriage machine.

Except for this difference, Pike has the other characteristics specified in the claim as already shown in comparing Pike with claim 1 of Felt. In brief summary, Pike has "a series of type arranged to print side by side" indicated at D in Fig. 1; he has "a laterally movable paper carriage" B′, D′, C′, shown in Figs. 4 and 5, "adapted to position the paper for the different columns"; "feed rolls" F and H^4 "for moving the paper longitudinally past the type"; and "means for actuating said rolls" comprising drive rolls M, the main operating lever C and the intervening train of mechanism there between.

But Pike lacks the subject matter of claim 2 because he fails to have the required "devices for impressing the paper upon the type" instead of which he impresses the type upon the paper through an intervening inking ribbon, just as is done in the defendant's wide carriage machine.

CLAIM 4 OF FELT COMPARED WITH HIETT NO. 580,863, AND WITH PIKE NO. 595,864.

Neither Hiett nor Pike has the subject matter of claim 4 for the same reason that defendant's wide carriage machine lacks that subject matter, namely, because failing

Deposition of Defendant's Witness, Arthur S. Browne.

to have "mechanism for shifting the carriage laterally the width of a column space."

The other characteristics specified in claim 4, namely, "a laterally movable paper carriage" and "means for feeding the paper vertically in any position of the carriage" are present in the machines of both Hiett and Pike, as already shown.

In both the Hiett and Pike the carriage is shifted laterally by hand manipulation, and whether or not the shift is to the extent of a column space, or more or less, depends upon the extent of movement which the hand of the user gives. Both Pike and Hiett have means for latching or locking the carriage in different lateral positions in which respect they resemble defendant's wide carriage machine, but the machine of the Felt patent has no such latching or locking mechanism.

As already stated, Felt provides for moving his carriage by hand, but the extent of that movement is solely within the will of the user and may or may not be the width of a column space. This is not what the claim calls for, because the Felt patent illustrates and describes in detail a special train of mechanism which not only shifts the carriage laterally, but in addition just the width of the prescribed column space for which the machine is designed and no more. This I have already described in detail in comparing defendant's wide carriage machine with this claim of Felt.

This prescribed mechanism of the claim is lacking in the patents of Pike and Hiett in just the same way as it is lacking in defendant's wide carriage machine; and, accordingly, claim 4 of Felt has a feature which is novel as compared with the Pike and Hiett patents, but that novel feature is not present in the defendant's wide carriage machine.

Deposition of Defendant's Witness, Arthur S. Browne.

These are my reasons for the conclusions stated at the outset of this answer.

By Mr. CLARKE: All reference made by the witness to the defendant's exhibit, "Narrow Roll Machine" is objected to as immaterial and irrelevant in view of the time at which said exhibit machine was evidently manufactured.

All reference made by the witness to the Hiett patent and to the Pike patent is objected to as immaterial and irrelevant, in view of the fact that the Felt patent "file wrapper and contents," referred to by the witness, discloses on its face the fact that the Felt invention antedated the applications for both the Hiett and Pike patents.

Q. 7. Please state whether or not you find any novelty in the subject matter of these Felt claims 1, 2 and 4, in view of the prior art? In answering, please disregard the Hiett and the Pike patents, which you have already discussed, and any other patents whose filing dates are later than January 1, 1890. You may assume that the date of filing of any U. S. application is that which is printed upon the face of the patent.

A. In limiting consideration to the art prior to January 1, 1890, it will expedite expressing my views to consider claim 4 of the Felt patent first, and independently of claims 1 and 2, because of the difference in subject matter between these two sets of claims. Each of claims 1 and 2 is rectricted to side by side printing, while claim 4 is not. I understand the patent to mean by "side by side" printing the assembling of a plurality of type side by side, and printing therewith on the paper without any intervening movement of the paper; thus distinguishing from the printing done by an ordinary typewriting machine wherein the characters are printed one by one and there is a shift of the carriage laterally following the printing of each character. Each of claims 1 and 2 of the Felt patent requires this side by side printing, while

Deposition of Defendant's Witness, Arthur S. Browne.

claim 4 does not, being directed to a tabulating machine generally without reference to the character of the printing. So far as the subject matter of claim 4 is concerned the printing may be done as in an ordinary typewriter, provided the recited combination of mechanism is pres ent.

Therefore, by reason of the more generic character of the machine with regard to the kind of printing which is defined in claim 4 I will take it up first for consideration. In doing so it will suffice to refer to the patent of Gathright, No. 436,916, granted September 23, 1890, on an application filed January 15, 1889.

Claim 4 of Felt Compared With Patent to Gathright No. 436,916.

The Gathright patent is for a typewriting machine constructed so as to facilitate the doing of tabular work, and it is one of the earliest successful tabulating machines.

At the outset of the specification Gathright points out the inconveniences of doing tabulated work on an ordinary typewriting machine, saying:

> "Heretofore in producing writings in which some of the lines are not filled, or in which open spaces occur, in order to bring certain words or figures into accurate vertical columns—such writings, for example, as bills of goods, invoices, statements of accounts, etc.—it has been necessary for the operator to pass the carriage over blank spaces either by repeatedly striking a spacing-key which feeds the carriage the space of only one letter at a time, or by unlatching the carriage and sliding it to the desired point by means of a hand-lever. Both of these methods are tedious, and they keep the mind of the operator under constant tension to remember the point where the carriage is to be stopped to register with the column, as desired, and the practice is common among operators of striking the first figure lightly and then turning the carriage up to see whether that

Deposition of Defendant's Witness, Arthur S. Browne.

figure registers properly before printing it in full. This method evidently requires many experiments at the expense of time and tends greatly to perplex the operator." (P. 1, lines 20-40.)

Having thus pointed out the objections to the existing machines, Gathright states the object of his own invention as follows:

> "The object of my invention is to obviate these objections by providing means for automatically rotating with the typewriter one or more columns of words or figures and of mechanically skipping any intervening space desired to be left blank." (P. 1, line 45.)

It is this column spacing characteristic of the Gathright patent which is of special interest in connection with claim 4 of the Felt patent in suit.

The Gathright patent states that he shows his invention attached to a Remington typewriting machine, which in 1889 was a most widely used typewriting machine.

The usual laterally moving wide carriage on which the paper is mounted is shown at 9 and, as is usual in carriages of the Remington typewriter it is wide enough to receive a sheet of paper upon which several parallel columns of matter may be printed.

The Gathright specification states that the "carriage is constantly impelled to slide in the direction of the arrow 7 by a weight or spring, and its movement is governed by an escapement or detent 6, engaging the ratchet teeth on the under side of the feed or rack bar" (line 1, page 70), this being the usual arrangement of the Remington carriage. As the patent says, "The escapement is operated, as usual, by a spacing key and by each key on the board, whereby the carriage is permitted to advance one notch or two at every stroke of a key. 8 represents a hand lever by which the rack may be disengaged from the detent of the escapement and the carriage be moved either way along the machine. (p. 1, line 75.)

Deposition of Defendant's Witness, Arthur S. Browne.

This describes the usual Remington typewriter organization and action.

In the ordinary work of the typewriter when a key is struck a letter is printed and the escapement is governed so that the carriage is moved by its spring one space laterally so that the successive letters will be properly spaced side by side. When the line has been completed the hand lever 8 is moved, thus releasing the escapement and the carriage can then be moved by hand to its starting position, or back and forth to any desired position.

Gathright does not describe how the paper is moved longitudinally for line spacing, since that constituted no part of his invention and was then well known. His drawings indicate, however, the mechanism for this purpose. They show a roller platen around which the paper passes with a co-operating feed roll at the rear, and the platen is shown with a ratchet at its end in the foreground of Fig. 1, and a feed roll is indicated in contact with the ratchet. It was a common arrangement in the Remington typewriter then as now to operatively connect this feed ratchet feed pawl with the hand lever 8 so that the platen could be rotated for line spacing concurrently with the lateral movement of the carriage.

It is to such a well known typewriting machine that Gathright applies his improvement to facilitate the doing of tabulating work.

As shown in the drawings the usual feed bar 5, which co-operates with the escapement 6, is provided with a forwardly extending arm 16, which lies over a "lift slide and stop rod" 14, which extends parallel with the feed bar 5, and with the line of lateral movement of the carriage. This rod 14 is pivotally connected at one end with the frame of the machine so as to rise and fall, and it carries lengthwise adjustable stop lugs which locate the column spaces. The drawings show two of these stop lugs

Deposition of Defendant's Witness, Arthur S. Browne.

at 21 and 22, but the specification states that "there may be any desired number of these lugs." (p. 2, line 6.) These lugs are spaced apart a distance depending upon the desired width of the column spacing.

During the normal operation of the machine the rod 14 occupies its lower position so that the stop lugs are below the path of the arm 16 of the feed bar, and then the typewriting machine acts like an ordinary typewriter. The rod 14 can, however, be lifted against the under side of the arm 16 sufficiently to tilt the feed bar 5 far enough to disengage it from the escapement 6. As soon as this is done the carriage is automatically moved by its spring until the arm 16 strikes the first stop lug 21. The rod 14 is then lowered so as to permit the feed bar 5 to again engage the detent or escapement 6 (thus holding the carriage in place), and also the stop lugs are lowered below the path of the arm 16 so that the normal action of the typewriter can be resumed.

The stop rod 14 is controlled in its movements by means of a key 18 pivoted at its middle at 20, and connected at its rear end to a vertical rod 19, which extends up to beneath the stop rod 14. When the front end of the key 18 is depressed the rod 19 is lifted, thereby lifting the rod 14, and hence freeing the carriage from the detent; and when the finger is removed from the key the rods 14 and 19 resume their normal lower and idle position by gravity.

This mechanism facilitates the doing of tabular work. The specification says:

> "The operation is described as follows: First decide where the columns of figures shall be located and fix the lugs 21 22 on the rod 14 accordingly—one lug for each column. The word 'column' as here used does not mean a vertical line of single figures, but a vertical line of sums, each sum including a number of figures on one horizontal line, and the

Deposition of Defendant's Witness, Arthur S. Browne.

> lugs should be set with reference to the position of the largest decimal to be placed on any line."

Gathright gives an illustration showing numbers printed in two parallel columns.

Gathright discloses mechanism for shifting the carriage laterally so as to print columns of numbers at definite spaces on the paper, and for shifting the carriage the requisite distance. The mechanism permits the carriage to be shifted the exact width of the column space. For example, if the carriage is in the position where it has been stopped by the lug 21 and it is desired to then move the carriage into the position determined by lug 22, the key 18 will be depressed, and as a result the carriage will be automatically moved until stopped by lug 22, with the result that the carriage is moved the exact width of one column space.

It will be noted that claim 4 of the Felt patent in suit calls simply for a tabulating machine and makes no reference to printing side by side as do other claims (such as 1 and 2), nor does it refer to any calculating characteristics, as done for example in claim 19. Computations and calculations do not enter into the subject matter of claim 4, which is directed simply to enough of the mechanism to make a tabulating machine.

As a tabulating machine the Gathright patent will do whatever printing in parallel columns that the machine of the Felt patent in suit will do, and there is nothing in claim 4 which requires printing to be done in any manner different from that employed by Gathright, and nothing which distinguishes the side by side printing which is usual with computing and tabulating machines from the letter by letter and space by space printing which is done with the ordinary Remington typewriter to which Gathright has applied his invention. Indeed, there is nothing in the *terms* of claim 4 of the Felt patent which

Deposition of Defendant's Witness, Arthur S. Browne.

is not applicable to the machine of the Gathright patent. That claim 4 is as follows:

> "4. The tabulating machine having in combination a laterally movable paper carriage, means for feeding the paper vertically in any position of the carriage, and mechanism for shifting the carriage laterally the width of a column space, substantially as specified."

The Gathright machine is a tabulating machine, and it has the combination of elements, so far as terms are concerned, recited in the claim, namely:

(1) "A laterally movable paper carriage." Gathright's paper carriage 9 is laterally movable.

(2) "Means for feeding the paper vertically in any position of the carriage." This has reference to the line spacing. While Gathright does not describe the line spacing devices, he states that his invention is applied to a Remington typewriter, and he indicates in his drawings the line spacing devices of that machine which are governed by the same hand-lever 8 which is used to disconnect the feed bar from the escapement when the carriage is to be moved back and forth by hand. These devices constitute "means for feeding the paper vertically," and they can be controlled "in any position of the carriage," and necessarily so, because they are all mounted on the carriage.

(3) "Mechanism for shifting the carriage laterally the width of a column space." Gathright has such mechanism comprising the spring or weight which does the actual work of moving the carriage laterally, and which is permitted to do this work when the key 18 is depressed and the stop rod 14 is lifted so as to disconnect the feed bar 5 from the escapement 6, and the extent of this movement be determined by the position of the stop lug which is just ahead of the arm 16. As I have

Deposition of Defendant's Witness, Arthur S. Browne.

heretofore explained, the extent of this movement may be the exact width of a column space.

These are all of the elements recited in the claim, and if the language of the claims is controlling the machine of the Gathright patent has the entire subject matter of the claims, since it is a tabulating machine having the recited instrumentalities and for the purpose specified in the patent of Felt.

As I view the subject matter of this claim, however, I think that when the claim specifies "means for feeding the paper vertically in any position of the carriage" it intends to define a mechanism for doing the line spacing, the controlling member of which is not on the carriage itself, but is outside of the carriage and is so operatively connected with the feeding devices on the carriage itself that while the controlling member maintains its position on the machine it may nevertheless govern the feeding devices on the carriage which move with the carriage in whatever position the carriage may occupy. That is to say, in the machine of the Felt patent the controlling member or line spacing is the main operating lever which always occupies the same position in the machine, and which nevertheless govern the feed rollers B, B′ and B^2 on the shifting paper carriage irrespective of the position which the carriage may occupy.

It seems clear to me that the terms "means" and "mechanism" as used in the claim can not be intended to refer simply to instrumentalities located exclusively on the carriage itself, and which can be manipulated by hand so as to do the line spacing and to shift the carriage laterally, since if such is the meaning of these terms then the claim would apply to any ordinary typewriting machine. An ordinary typewriting machine can be employed to do tabular work, as the Gathright patent itself explains in the passage already quoted. For example, the ordinary line spacing devices on the carriage can be

Deposition of Defendant's Witness, Arthur S. Browne.

used to feed the paper longitudinally in all positions of the carriage, and likewise by means of the usual feed rack release lever shown at 8 in the Gathright the carriage can be released and simply moved by hand to any desired point, and to the width of a column space. Any such interpretation appears to be unreasonable. It seems to me, therefore, that both the "means for feeding the paper vertically in any position of the carriage" and the "mechanism for shifting the carriage laterally the width of a column space," specified in claim 4, necessarily involve trains of mechanical devices which shall include an actuating member not on the carriage itself. If this is the correct understanding, then the "means for feeding the paper vertically in any position of the carriage" must involve some controlling member such as the main operating lever of the Felt machine which is not on the carriage itself, and if this is correct then Gathright does not have the subject matter of the claim, because his line spacing is done exclusively by mechanism entirely carried by the carriage itself.

It will be noted that it requires the same sort of ignoring of the essential structure of the Felt patent in suit to apply claim 4 to the defendant's wide carriage machine as it does to apply it to the Gathright patent. Defendant's wide carriage is shifted laterally solely by hand manipulation of devices carried by the carriage itself. There is no instrumentality outside of the carriage which is moved for the purpose of moving the carriage. Accordingly, defendant's wide carriage machine does not have the subject matter of claim 4 of the Felt patent which calls for "mechanism for shifting the carriage laterally the width of a column space," because that necessarily requires the presence of a mechanism some portion of which is external to the carriage itself.

Deposition of Defendant's Witness, Arthur S. Browne.

For exactly the same kind of reason Gathright does not have the subject matter of claim 4 of the Felt patent, because he does not have "means for feeding the paper vertically in any position of the carriage" which includes some instrumentality outside of the carriage which takes part in the line spacing.

On the other hand, if claim 4 is to be construed by the court so that hand-manipulated devices carried solely by the carriage itself are to constitute the "means" and the "mechanism" of claim 4, which must be done in order to apply that claim to defendant's wide carriage machine, then the same interpretation makes the claim applicable to the machine of the Gathright patent.

In accordance with my own understanding of the claim, its subject matter is present neither in the Gathright patent nor in the defendant's wide carriage machine. Accordingly, in my opinion the subject matter of claim 4 is novel so far as the Gathright patent is concerned, but at the same time that novel subject matter is not present in the defendant's wide carriage machine.

Adjourned to Wednesday, September 13, 1911, at 10 A. M.

NEW YORK, September 13, 1911.

Met pursuant to adjournment.

Present: Counsel as before.

Witness Browne continues his answer to Q. 7.

A. Side by side printing.

Each of claims 1 and 2 of the Felt patent in suit specifies side by side printing, such as is exemplified by the calculating or computing machines which print numbers in a column together with a computation, either adding or other arithmetical calculation.

Such machines were old prior to 1890.

Every one is familiar with the printed strips which a bank returns to a depositor containing the amounts of

Deposition of Defendant's Witness, Arthur S. Browne.

his checks and the sum total thereof. This printing is done on an adding machine of the general type of machines illustrated by defendant's narrow roll machine, and such single column strips can be printed on a wide carriage machine.

Adding machines for doing this single column work are shown in patents of earlier filing date than 1890.

Such a machine is shown, for example, in the two patents of Burroughs, No. 388,119, granted August 21, 1888, and No. 420,619, granted February 4, 1890, on an application filed July 13, 1888. These two patents illustrate the same machine, as is apparent by comparing the four figures of the second patent with Figs. 1, 9, 10 and 11 of the first patent. I refer to the second patent simply because the first patent makes reference to its disclosure (p. 6, line 57) to explain the manner in which the printing impression is accomplished. Referring to the second Burroughs patent, No. 420,619, there are nine printing wheels 21 arranged side by side (Figs. 2 and 4), and each has ten types for the ten digits. The machine is provided with keys, as shown in Fig. 1^a of patent 388,-119, and on depressing the appropriate keys the proper numbers on the different type wheels are brought into printing line to print the desired number. An inking ribbon P^6 extends behind the type wheels, as shown in Fig. 1 of patent 420,619. The strip of paper to be printed is shown at V^2 in the same figure, and it is supported by feed rollers S, S′, the roller S constituting the platen to support the paper during the printing. These feed rollers are carried by a swinging frame and the printing is done by first swinging the frame on the platen S away from the type (to the left in Fig. 1) and a spring then swings the frame in the opposite direction, moving the platen S toward the line of types, thus forcing the paper against the inking ribbon and the inking ribbon against the types, thereby doing the printing. The swinging of

Deposition of Defendant's Witness, Arthur S. Browne.

the frame R also effects the partial rotation of the platen S and the co-operating feed roll S′, thereby effecting the line spacing. This mechanism is capable of printing only one column of figures and computations. It discloses "printing mechanism adapted to print two or more characters side by side" and "a series of type arranged to print side by side," as recited in claims 1 and 2 of the Felt patent in suit; and it has "devices for feeding the paper longitudinally" as specified in claim 1, and these devices comprise "feed rolls for moving the paper longitudinally past the type, and means for actuating said rolls" as specified in claim 2. The distinction between claims 1 and 2 of the Felt patent in suit as compared with these Burroughs patents grows out of the fact that Felt prints in parallel columns and Burroughs in one column only.

Burroughs prints paper between a platen which supports the paper and a line of types; whereas, in the machine of the Felt patent in suit the printing is done between movable hammers and the line of type. Again, Burroughs has a single platen to make an impression upon all of the type at once, whereas Felt has individual hammers, one for each of the types in the printing line. These differences, therefore, were not contributed to the art by the patent in suit, because they were all disclosed by the now expired patent to Felt, No. 441,233, granted November 25, 1890, on an application filed September 28, 1889. This patent is for an adding and recording machine which does side by side printing of just the same character as that of the patent in suit, except that only a single column of numbers is printed instead of several columns side by side. The printing is done just the same in the two Felt patents, as is apparent by comparing Fig. 2 of the early patent No. 441,233 with Fig. 2 of the patent in suit, No. 628,176. In the early Felt patent, No. 441,233, the paper is fed by feed rollers 8, 9

Deposition of Defendant's Witness, Arthur S. Browne.

and 10, the types are carried on segments H, of which there are as many as the digits to be printed in a single line, and for each type segment H there is a hammer P, the specification stating that one of these hammers is "provided for each order of numbers to be recorded" (p. 2, line 106), and eight of the hammers are shown in Fig. 7. The early Felt patent, No. 441,233, has appropriate mechanism for feeding the paper longitudinally for line spacing, and it is shown in Fig. 5, and is described at lines 62-73 of page 3. This patent has all of the side by side printing devices of the patent in suit, and whatever merit may be ascribed to the particular method of printing by individual hammers as contrasted with the single platen hammer of the prior Burroughs patent is due to the early Felt patent which has expired and is now public property and open to the use of the defendant.

The defendant uses separate hammers for the several types at the printing line, but they are differently located from those of the two Felt patents, No. 441,233 and No. 828,176, in that they act upon the type carriers and drive the type toward the paper, as I have already explained. In this respect the defendant's construction is similar to that shown in the now expired patent of Burroughs, No. 505,078, September 12, 1893. As shown in Figs. 1 and 2 of this Burroughs patent each type carrying segment K carries several movable blocks 618 carrying types, and with each segment there is a co-operating hammer 715. The paper to be printed is supported by a roller platen 599, and, as shown in Fig. 2, the printing is done by the hammer 715 driving the type block 618 at the printing line toward the platen. This organization is defined in claim 1 of the Burroughs patent No. 505,078, which reads:

> "1. The combination of a platen, a series of type carriers movable opposite said platen and a series

Deposition of Defendant's Witness, Arthur S. Browne.

of separate drivers each arranged to operate upon the type between it and the platen to bring the two together, substantially as set forth.''

Therefore, the specific means for printing numbers side by side in adding and computing machines shown in the Felt patent in suit and employed by the defendant are respectively shown in now expired patents.

Accordingly, the novelty, if any, of the subject matter of claims 1 and 2 of the Felt patent in suit can not reside in the printing mechanism for side by side printing, nor in the line spacing so as to print numbers one above the other in a column, but is dependent upon the proposition that there was substantial novelty in 1890 in applying a laterally movable wide carriage to such an old printing mechanism, and in effecting the line spacing in every position of the carriage.

Claim 1 of the Felt Patent in Suit.

The subject matter of this claim of the Felt patent in suit simply involves the addition of a laterally movable paper carriage with paper feeding rolls to a side by side printing mechanism, and preserving the relation between the feed rolls and their actuating mechanism so that the line spacing can be effected at any position of the carriage. The subject matter of this claim can not rest for its novelty on any of the specific devices of the Felt patent in suit if it is to be found in the defendant's wide carriage machine, because the specific devices of Felt differ from those of the defendant with respect to every characteristic broadly recited in the claim.

Accordingly, the substantial novelty of the subject matter of claim 1 of the Felt patent can be judged by a consideration of what must be accomplished in order to print in several columns in the defendant's wide carriage machine.

Deposition of Defendant's Witness, Arthur S. Browne.

I have heretofore, in describing defendant's machine, in answer to Q. 6, compared it with defendant's narrow roll machine, and have enumerated the differences between them, which are essential in converting the narrow roll machine into the wide carriage machine. In scheduling those differences I called attention to the circumstance in the defendant's narrow roll machine that a swinging bail was employed to transmit the movement of the reciprocating actuating bar to the paper feed rolls to effect line spacing, and that in the wide carriage machine this bail is simply lengthened so as to be as long as the platen. Structurally this is true, but may not do entire justice to the achievement of Felt, because in defendant's narrow roll machine the swinging bail has no function *as a bail*. Every operative requirement of the narrow roll machine would be fulfilled if the bail were omitted and if the rock shaft thereof carried a simple crank arm in the path of the reciprocating actuating bar. Hence, functionally the difference between the defendant's narrow roll machine and the wide carriage machine is that the wide carriage machine has a bail acting functionally in connection with the reciprocating actuating bar in all positions of the laterally movable paper carriage.

Accordingly, the art prior to 1890 is to be examined with a view of determining whether or not it contains sufficient information to enable the skilled mechanic to make the necessary changes to convert the defendant's narrow roll machine into a wide carriage machine, assuming that the narrow roll machine does not have a bail at all but simply a crank arm in the path of the reciprocating actuating bar. To determine this it suffices to take into consideration the patent of Silkman, No. 436,319, granted September 9, 1890, on an application filed August 25, 1887.

Deposition of Defendant's Witness, Arthur S. Browne.

This Silkman patent No. 436,319 is for a typewriting machine, the general mode of operation of which is similar to the usual typewriters in that the type print one by one at the same printing point (and not side by side as in the adding and calculating machines), and at the printing of each character the paper carriage is shifted laterally to the extent of a letter space so that fresh paper is successively brought step by step to the printing point. The characteristic of this Silkman patent, to which I direct attention, is its mechanism for line spacing. In the ordinary typewriting machine the line spacing is done by mechanism carried exclusively by the carriage itself and not by mechanism comprising an operating member which is not on the carraige, as in the Felt patent in suit, and in the defendant's wide carriage machine; but in the Silkman patent the line spacing mechanism is quite similar to that employed by the defendant in its wide carriage machine. Silkman has a laterally movable paper carriage M, the opposite ends of which are shown in Figs. 3 and 10, while it is shown in plan view in Fig. 2. This carriage is wide enough to receive an ordinary sheet of paper and hence to handle paper capable of having several parallel columns of numbers printed thereon. The carriage has longitudinal rods m (Fig. 3), which slide laterally in rolls m'. This laterally moving paper carriage is equipped with feed rolls n^2 and n^3, shown in Figs. 3 and 10, and the upper roller is a platen to support the paper against the printing pressure. The upper platen roller is rotated step by step to effect the line spacing. As shown in Fig. 10, the platen at one end has a ratchet wheel R which is engaged by a spring-pressed pawl S carried by a pivoted lever r' which is connected by a link s' with a bell crank or elbow lever s^2. The lower end of this lever s^2 is connected with one end of a bar s^3 which extends length-

Deposition of Defendant's Witness, Arthur S. Browne.

wise of the carriage and at the further end of the carriage is connected to the lower end of a swinging line s^4 shown in Fig. 3. This bar s^3 extends the whole length of the carriage, as shown in Fig. 2, and it is parallel with the travel of the carriage. This bar s^3 with its supporting link s^4 and lever s^2 constitutes a swinging bail having just the same offices and functions as the swinging bail of the defendant's wide carriage machine. Silkman's bail bar s^3 co-operates with a hook on the inner end of a sliding pull rod n^{10}, as shown in Figs. 3 and 10. As shown in Fig. 3 this pull rod n^{10} extends to the front of the machine and has a knob which can be grasped for pulling the rod. By reason of the swinging bail the portion of the feeding mechanism on the sliding carriage is always within the control of the pull rod so that whatever the position of the carriage may be the pull rod may be pulled for the purpose of effecting the line spacing. The similarity in structure and mode of operation between the line spacing of Silkman and that of defendant's wide carriage machine is apparent.

In most typewriting machines there is a spring which pulls the carriage to the left so that the carriage is advanced step by step by this spring to the left during the printing. There are other typewriters, however, in which the step by step advance of the carriage is positively effected, and the Silkman machine belongs to that type, an electro-magnet being employed which through intervening instrumentalities effects the forward step by step feed of the carriage. The Silkman carriage is restored to its initial position after a line has been printed by means of a spring, shown in Fig. 7, and as described on page 4, lines 44-50. After the desired length of line is printed the carriage feeding devices are disconnected and the spring restores the carriage to its right-hand position. This is effected by the same pull rod n^{10} which effects the line spacing, as illustrated in

Deposition of Defendant's Witness, Arthur S. Browne.

Fig. 9. Accordingly, Silkman's line spacing mechanism is "automatic" in just the same sense as that of the Felt patent in suit. In both instances the mechanism derives its movement from the hand of the user and it is automatic only in that the hand-controlled member does not exclusively effect the line spacing, and it is enough for the user to know that he is to manipulate the controlling member and he need not even know how it produces its results.

Except for the recitation in claim 1, "adapted to print two or more characters side by side," the subject matter of that claim is present in the Silkman patent. I will quote this claim with the differentiating language italicized, as follows:

> "1. The combination with the printing mechanism *adapted to print two or more characters side by side, of* a laterally movable paper carriage, devices for feeding the paper longitudinally mounted in said carriage, and automatic mechanism acting in any position of the carriage to actuate said feeding devices in the line-spacing movements, substantially as specified."

Omitting the italicized language the subject matter of the claim is in the Silkman patent. Silkman's feed rollers, m^2, m^3, are "devices for feeding the paper longitudinally mounted in said carriage," and Silkman's pull rod n^{10}, swinging bail s^2, s^3, s^4, connecting rod s′, pawl lever and pawl s and ratchet R constitute "automatic mechanism acting in any position of the carriage to actuate said feeding devices in the line spacing movements."

Silkman does not have the subject matter of this claim of Felt, because his printing mechanism is not "adapted to print two or more characters side by side" as the claim requires. But such side by side printing mechanism was old, as sufficiently shown by the early Felt patent No. 441,233, or by Burroughs, 388,199. Hence,

Deposition of Defendant's Witness, Arthur S. Browne.

the art prior to 1890 contained all the materials necessary to make the combination of claim 1, and the proposition presented for discussion is whether or not that combination would be within the expected skill of those familiar with the art.

I have heretofore scheduled what is necessary to be done to convert defendant's narrow roll machine into the wide carriage machine, and all of the necessary changes are disclosed in the Silkman patent.

(1) The first change is to provide the narrow roll machine with carriage guides, and Silkman has guides for the carriage.

(2) There must be a sliding carriage for the paper adapted to slide on the guideways, and Silkman has such a carriage.

(3) The platen must be made long enough to receive paper wide enough to have imprinted upon it several columns of figures, and Silkman has such a platen.

(4) The carriage must be equipped with a feed roller co-operating with the roller platen to feed the paper in its line spacing movements, and this co-operating roller should be as long as the platen, and Silkman has such a roller at m^3.

(5) There must be a swinging bail substantially as long as the platen mounted upon the carriage to co-operate with the actuating bar, and Silkman has such a bail at s^2, s^3, s^4.

(6) There must be intervening operative connections between the bail and platen mounted on the carriage and Silkman has such a connection at R, s, r' and s.

In other words, the Silkman patent supplies everything which is necessary to apply to the side by side printing mechanism of the defendant's narrow roll machine in order to produce the defendant's wide carriage machine.

In other words, given the appreciation of the desira-

Deposition of Defendant's Witness, Arthur S. Browne.

bility of doing the printing work of an adding machine having side by side printing in a plurality of columns, the typewriting art supplied all the information that was necessary.

It seems to me inevitable that this intent being formed the typewriting art has inevitably suggested itself to the adding machine mechanic. So far as claim 1 goes, it simply calls for a printing mechanism. It is the way of doing printing which is important, and nothing is said about adding or any other arithmetical computation. Regarding the printing mechanism, adding machines and typewriting machines belong to the same art. So closely are they allied that the Felt patent in suit says, "This carriage may be made much like the paper carriage of the typewriters." (P. 2, line 16.)

The ordinary typewriter carriage is laterally movable and it is capable of handling paper wide enough to print in different columns, and in fact may be used for that purpose. The idea of using such a movable wide carriage on a machine which prints side by side would be entirely obvious, and the application could be made by the mechanic. The only problem involved would be how to preserve the operative relation between the feed rolls on the carriage and the actuating member therefor outside the carriage, and this had been solved by Silkman.

Accordingly, in my judgment, the production of the combination of claim 1 was within the expected skill of the mechanic and therefore possesses no substantial novelty.

This opinion is open to two criticisms, neither of which in my judgment is sound.

A typewriting carriage feeds step by step laterally on the printing of each character, and this is true of the carriage of the Silkman patent. Such feeding is not em-

Deposition of Defendant's Witness, Arthur S. Browne.

ployed in adding machines, because the successive numbers are printed in a single column. The step by step letter spacing feed of ordinary typewriters is not needed in an adding machine, and that was well known prior to 1890, because there was no such feed in the adding machines of the Burroughs patent No. 388,119, or of the early Felt patent No. 441,233. Accordingly, the mechanic would necessarily know that in applying a wide laterally moving paper carriage to an adding machine the letter spacing devices would be useless and should be left off. Both the letter spacing devices and their function would be omitted; and to thus omit both the mechanism and its function would not require the exercise of invention, but simply the common sense of the ordinary mechanic.

The second criticism which may be urged is that I have taken as my starting point such an adding machine as is exemplified by defendant's narrow roll machine as illustrating the side by side printing mechanism to which the Silkman carriage may be applied; and that that printing mechanism was not in existence prior to 1890 because it employed the internal hammer construction first disclosed in the Burroughs patent 505,708, granted September 12, 1893, on an application filed May 14, 1892. This Burroughs patent, however, discloses an internal hammer construction which was not the invention of Felt, and defendant has availed itself of this internal construction (now public property) and has not copied the particular hammer construction of the prior Felt patent No. 441,233, although within its rights, since that early Felt patent expired in 1907. To fit the defendant's structure claim 1 of Felt must be applicable to such a printing structure as is shown in this Burroughs patent No. 505,078, and to apply a wide carriage with the instrumentalities of claim 1 of Felt to that Burroughs structure merely involved adoption of the Silkman paper

Deposition of Defendant's Witness, Arthur S. Browne.

carriage and its accessories, which was within the skill of the mechanic.

Leaving, however, the internal hammer construction out of consideration altogether, the early Felt patent 441,233, November 25, 1890 (application filed September 28, 1889), shows the exact printing mechanism of the Felt patent in suit, so far as side by side printing and the location and action of independent hammers are concerned. To alter that machine so as to incorporate a wide sliding carriage and maintain its line spacing mechanism in co-operating relation during all positions of the carriage would, in view of the Silkman patent, be merely the work of the mechanic. It will be noted that claim 1 does not call for the column spacing mechanism, or any alarm mechanism, or any mechanism for feeding the paper backward, such as Felt has incorporated in the machine of the patent in suit, and consequently none of the alterations involved in these devices have to be taken into consideration. It will only be necessary to make the necessary mechanical changes to provide room for the sliding carriage and its guides so as to avoid interference with the existing instrumentalities.

Accordingly, I am of the opinion that while no one patent or structure of the prior art shows the exact combination of claim 1 of the Felt patent in suit, nevertheless that combination possessed no substantial novelty on January 1, 1890, since its production required simply the ordinary skill of a mechanic selecting from the known resources of his art.

Claim 2 of the Felt Patent.

In the subjoined copy of claim 2 I have italicized the only expressions which distinguish from the Silkman patent No. 436,319. The claim so italicized is:

"2. The combination with a series of type *ar-*

Deposition of Defendant's Witness, Arthur S. Browne.

ranged to print side by side, devices for impressing the paper *upon the type,* a laterally movable paper carriage, adapted to position the paper for the different columns, feed rolls for moving the paper longitudinally past the type, and means for actuating said rolls, substantially as specified."

Silkman's carriage can be moved so as to "position the paper for the different columns," there being no requirement in the claim that there should be any special mechanism for this purpose; and Silkman has "feed rolls (m^2, m^3) for moving the paper longitudinally past the type, and means for actuating said rolls."

Silkman lacks the subject matter of this claim because he does not print side by side, nor does he impress the paper *upon the type,* in this latter respect differing from Felt just as defendant's wide carriage machine differs from Felt.

What Silkman lacks is supplied by the early Felt patent No. 441,233. In view of Silkman, it would require merely the skill of the mechanic to mount the feed rolls of the early Felt patent in a laterally movable carriage, and to make said carriage wide enough to print several parallel columns and to maintain its line spacing devices in co-operative relation with the actuating member therefor. Accordingly, in my judgment, there is no substantial novelty in the subject matter of claim 2 of the Felt patent in suit, in view of the early Felt patent 441,233, and the Silkman patent 436,319, for the reasons which I have already stated at length in connection with claim 1 of the Felt patent.

Direct examination closed.

Cross-Examination by Mr. Clarke.

X-Q. 8. Do you think that in the work involved in the subject matter of the specification and drawings of the Felt patent sued upon, Mr. Felt was seeking the im-

Deposition of Defendant's Witness, Arthur S. Browne.

provement of mere typewriters or of printing adding machines?

A. He was not seeking to improve an ordinary typewriter, but, on the other hand, while he was endeavoring to improve an adding machine as a particular proposition, he evidently appreciated that his improvement did not lie in the adding machine itself, but in the mechanism for printing, and accordingly his claims were drawn with the apparent intent of including within their scope machines other than adding machines.

Indeed, no one of the 27 claims of the patent calls for an adding machine, except possibly claim 19, which calls for a "calculating machine." Several of the claims of which claim 4 is an example, call simply for a "tabulating machine" and specify features which are obviously applicable to any tabulating machine irrespective of whether any adding or other computation is performed.

Accordingly, in my view, while Felt's specific object was to improve an adding machine, he intended his claims to have a wider scope and to include any machine to which their subject matter is applicable irrespective of whether any adding was done or not.

X-Q. 9. The preamble of the Felt specification reads as follows, does it not:

> "This invention relates to the construction of calculating-machines adapted to both add numbers and to print or tabulate the numbers as they are added, together with the sums of the numbers. My endeavor therein has been to adapt such machines to use with paper in sheet or short-length form as distinguished from roll or continuous-length paper; also, to permit the printing upon the paper of a plurality of columns or vertical rolls of numbers by providing it with a laterally-shifting paper-carriage and with mechanism adapted also to feed the paper vertically at each printing operation";

and do you think that Felt intended to refer to such tabulating machines or to any sort of a tabulating machine,

Deposition of Defendant's Witness, Arthur S. Browne.

when he said in, for instance, his claim 4, "The tabulating-machine * * * substantially as specified"?

A. Undoubtedly he intended to include within its scope the particular tabulating machine which he shows and describes. On the other hand, he has in that claim expressed a combination in sufficiently comprehensive language to include any sort of tabulating machines in which the recited subject matter might be employed; and he has carefully refrained from incorporating in that claim any of the characteristics which are essential in adding. In adding machines of the character disclosed by Felt it is important if not absolutely necessary to print with type arranged side by side, and such side by side printing is specified in claims 1 and 2 and the omission of such side by side printing in claim 4 necessarily indicates an intent of broadening the scope of claim 4 so as to render such side by side printing unnecessary so far as that claim is concerned.

X-Q. 10. You think, do you, that the several claims you have considered in this patent should be construed broadly enough to apply to machines that are not included in the preamble quoted from the specification in my last question?

A. There is a difference in the several claims in this regard, and I assume the difference to be intentional. Claims 1 and 2 require side by side printing, while claim 4 does not.

Accordingly, the inference is inevitable that claim 4 was intended to have a scope beyond the specific character of the machine disclosed and referred to in the preamble of the specification.

On the other hand, claims 1 and 2 require the side by side printing which is characteristic of adding machines. The adding feature itself is not specified in the claim. Assuming that it might be useful to have a machine which would print numbers in parallel vertical columns, and

Deposition of Defendant's Witness. Arthur S. Browne.

which is identical with the structure of the Felt patent in suit, except that it omitted the totaling mechanism, I think that such machine would have the subject matter of claims 1 and 2. This, however, seems to be a rather moot proposition, and as no such suggested machine is under consideration, I have given my direct testimony under the assumption that claims 1 and 2 may fairly be considered as limited to a machine which prints, tabulates and adds.

I have not so understood claim 4, however, because I have assumed that the omission of any reference to side by side printing in that claim involves a contrast with claims 1 and 2, and accordingly in that respect claim 4 is of greater intended scope.

X-Q. 11. Then you don't think the use of the word "column" in claim 4 implies the presence of side by side printing mechanism?

A. I do not.

X-Q. 12. If that be so, does or does not claim 4, in your view of its intended breadth, read literally term for term and word for word on even the typewriter on which this deposition is being written, and on which Felt's specification was probably written?

A. It does not, for two reasons the claim specifies "mechanism for shifting the carriage laterally the width of a column space," and the ordinary typewriter has no such mechanism, but only mechanism for shifting the carriage laterally the width of a *letter* space.

Again, claim 4 calls for "means for feeding the paper vertically in any position of the carriage," and while perhaps that language *as language* might apply to an ordinary typewriting machine, nevertheless, as I have stated in my direct examination, I think that its undoubted significance is that the stated means must include some instrumentality not on the carriage itself. Otherwise the

Deposition of Defendant's Witness, Arthur S. Browne.

expression "in any position of the carriage" becomes practically superfluous and meaningless.

X-Q. 13. Since it is obviously true that the mere language "means for feeding the paper vertically in any position of the carriage" describes what is present in any ordinary typewriter, where, outside of the mere language of claim 4, did you look for the light that gave "undoubted significance" to these words other than what the mere words themselves describe?

A. I took into consideration the construction and mode of operation of the machine illustrated and described in the Felt patent.

X-Q. 14. Now why did you take into consideration just far enough so that the claim, so interpreted, would still read on some of the prior art of typewriters, but not take it into consideration far enough so that the claim would read only on devices to which the preamble of the patent's own specification expressly declares that the invention of the patentee relates?

A. If counsel has derived the idea stated in the question from my testimony, I am afraid that I have not made my position clear, because, as I understand the subject matter of claim 4 of the patent in suit, it is not present in any patent of the prior art, whether in adding machine or a typewriter. As I recall, I have discussed claim 4 only in connection with the prior patents of Hiett, of Pike, and of Gathright. I do not find the subject matter in Hiett or in Pike, for the same reason that I do not find the subject matter in defendant's wide carriage machine, because each of the three does not have the required "mechanism for shifting the carriage laterally the width of a column space"; and I do not find the subject matter in Gathright, because he does not have the required means for "feeding the paper vertically in any position of the carriage" as I understand the meaning of that phrase.

Deposition of Defendant's Witness, Arthur S. Browne.

X-Q. 15. What do you understand to be the meaning of the word "column" that is used in this claim 4?

A. A set of characters printed one above the other.

X-Q. 16. Do you think it can be read as restricted to a single vertical row of figures, or that it must be read to mean, as the specification says, "a vertical column or row of numbers" irrespectively of whether each horizontal line of the column contains one or a plurality of characters?

A. I think that a vertical row of numbers each containing a single digit would still be a column of numbers within the meaning of the patent. I think it obvious that the specific machine of the patent could be used for printing single digits in a vertical row, and as the machine can be used without printing the totals at all, a vertical column of single digits might be printed. I think that the language of the claim is sufficiently generic to cover either a column of single digits only or a column including plural digits in each horizontal line, or a combination of the two.

X-Q. 17. Now will you please explain more fully what you meant by your previous statement: "In adding machines of the character disclosed by Felt it is important, if not absolutely necessary, to print with type arranged side by side"?

A. In an adding machine even if it should be used for adding single numbers only their sum would include more than a single digit if several digits were to be added.

Accordingly, any practicable adding machine must be capable of supplying a sum having several digits, and if the adding machine is also to do printing, it must be capable of printing a plurality of figures which shall appear on the paper. So far as I know this can be done practically only when the types representing the different orders of numbers (that is to say units, tens, hun-

Deposition of Defendant's Witness, Arthur S. Browne.

dreds and thousands and so on up to the capacity of the machine) are capable of being assembled side by side so that the figures are printed on the paper side by side.

X-Q. 18. And these side by side denominational orders of printing type are respectively co-ordinated with adding devices of corresponding denominational orders?

A. Yes.

X-Q. 19. What do you understand to be the purpose and utility of having individual type hammers for the side by side printing types in adding machines?

A. To secure uniformity of impression under all conditions of use, and especially in the class of machines in which unnecessary zeros at the left of a significant number are not printed.

X-Q. 20. What difficulties, with respect to securing uniformity of printing, do you understand that the individual type hammers overcome?

A. In case there is not a very great difference in the number of characters which are printed at the same time, a single impression device can be employed. For example, in workmen's time recorders which print the hour and minute of the arrival and departure of employes, and sometimes other matter indicating the forenoon or afternoon or the day of the week there is customarily employed only a single impression member. I am familiar with quite a large number of this class of machines. In some instances the single impression member moves the paper towards the type, and in some the types move toward the paper. In such machines the variation of the number of type employed from time to time is not great, and hence the single impression member can be employed. For example a workman may go out at 11:59 and may come back at 1:2. Such printing can be efficiently done with a single impression member.

In an adding machine, however, where unnecessary

Deposition of Defendant's Witness, Arthur S. Browne.

zeros are not printed, there may be great variation in the number of digits at the printing line. For example, in defendant's wide carriage machine there may be at one time nine type at the printing line and at another time only one type. If a single impressing member is used the printing impression will not be uniformly done. If the pressure were great enough to legibly print with nine types the printing would be too heavy for the single type and there might be danger of punching a hole in the paper just as some typewriter operators frequently punch holes in the paper in printing a period. This is obviated by having individual hammers for each of the types which is at the printing line.

X-Q. 21. Have you also considered the matter of the differences of level and of rigidness of position between a number of side by side types brought up to the printing line for printing a large number at a single operation of the adding machine?

A. If the faces of the type were not brought into the same plane, the individual hammers would be capable of making clean impressions which the single hammer would not.

X-Q. 22. Do you know of any printing adding machine in practical use that does not use individual type-hammers for its side by side printing type?

A. No.

Adjourned to Thursday, September 14, 1911, at 10 A. M.

NEW YORK, September 14, 1911.

Met pursuant to adjournment.

Present: Counsel as before.

Cross-Examination of Witness Browne Continued.

X-Q. 23. When Mr. Felt undertook to produce a printing adding machine provided with a laterally movable

Deposition of Defendant's Witness, Arthur S. Browne.

paper carriage and adapted to tabulate parallel columns of numbers on a wide sheet of paper, do you think it would have been the natural and reasonable course for him to take, as the machine to work on, the most practical printing adding machine then known?

A. Yes, but with one qualification. It frequently occurs that an inventor, particularly if he is at the same time a manufacturer or working for a manufacturer, cannot utilize the best prior mechanism as the foundation of his work, since it may be covered by patents in adverse hands. Therefore the inventor may be compellled to add his improvement to an inferior type of machine.

X-Q. 24. Do you know of any printing adding machine that in or prior to the year 1890 was provided with side by side printing types having individual type-hammers, instead of a single hammer-platen, except the machine of Mr. Felt's own patent 441,233?

A. No.

X-Q. 25. And if the machine shown in said Felt patent 441,233 was, as a matter of fact, the machine that Mr. Felt, in or prior to the year 1890, took to work on, when he produced the first machine embodying the subject matter of claim 1 of his patent 628,176, do you think that the work necessary to so reorganize the said earlier machine then involved the exercise of invention or merely the ordinary skill of a mechanic in the printing adding machine art?

A. Merely the skill of the mechanic.

X-Q. 26. Now if it should happen that you are mistaken in the opinion expressed in your last answer, and the work stated in my last question were held to involve the exercise of invention, would the scope or inventive character of the subject matter of this claim 1 be in anywise lessened by any showing that the side by side printing mechanism shown in the subsequent Burroughs pat-

Deposition of Defendant's Witness, Arthur S. Browne.

ent 505,078 of 1893 was of a form that made it easier to apply a laterally movable paper carriage than did the form of printing mechanism in the machine that Felt worked on, the machine of the aforesaid Felt patent 441,233?

A. No.

X-Q. 27. And I understand you to say that the "Complainant's Exhibit, Defendant's Machine," as well as the "Defendant's Exhibit Narrow Roll Machine," both having a printing mechanism in which the individual type-hammers are behind their respective side by side printing types, instead of being on the other side of the paper upon which said types print—and that in this stated respect the printing mechanism of the said exhibit machines is like that of Burroughs patent 505,078, instead of like that of Felt patent 441,233?

A. Yes.

X-Q. 28. And I further understand you that the printing mechanism of "Complainant's Exhibit, Defendant's Machine" is nevertheless consistent with the statement of claim 1 of the patent sued upon, reading "the printing mechanism adapted to print two or more characters side by side"?

A. Yes.

X-Q. 29. In the "Complainant's Exhibit, Defendant's Machine" can you position the paper carriage stationarily for the printing of a column of various numbers, of one or several figures each, and then shift the paper carriage laterally after the completion of a column in order to bring a fresh portion of the paper in front of the printing center and in readiness for the printing of another column?

A. Yes.

X-Q. 30. Is that also true of the machine of the patent sued upon?

Deposition of Defendant's Witness, Arthur S. Browne.

A. Yes.

X-Q. 31. Is it true of the Gathright patent, or is it a fact that in trying to print such a column with the Gathright typewriter, the printing center shifts laterally on the paper, automatically, immediately upon the printing of each and every figure in each and every number in any such column of numbers?

A. The mode of operation stated in X-Q. 29 is not true of the Gathright patent; and your description of Gathright in the present question is correct.

X-Q. 32. Now which do you think is the fairer way to interpret the words "the width of a column-space" in claim 4 of the patent sued upon—to interpret it as meaning the width of the space from the printing center of one column of numbers to the printing center of the next column of numbers, which is the actual extent of the column shift movement in the machine of the patent specification and drawings; or to interpret the quoted words as meaning something broad enough to also include the kind of carriage movement that you have just said is present in the Gathright typewriter patent?

A. Undoubtedly the interpretation first presented in the question, which seems to me to be the necessary interpretation, and which I have endeavored in my direct examination to insist upon. That interpretation, I might add, is likewise applicable to the Gathright patent as I have explained in my direct examination. The Gathright mechanism is capable of shifting the carriage the exact predetermined width of the column space. As I have already pointed out, if the Gathright carriage is stopped in the position determined by the stop lug 21 and the key lever 18 is then depressed, the carriage will be moved the exact width of the prescribed column determined by the distance apart of the two lugs.

X-Q. 33. The statement in the last sentence of your

Deposition of Defendant's Witness, Arthur S. Browne.

last answer will not hold true, will it, either in case you print anything after the carriage comes to the first stop, or in case you do either print something or touch the regular spacing bar of the typewriter after the carriage has come to the first stop (the lug 21)? For in the latter case the striking of the lever 18 would obviously cause the carriage to be moved less than the distance from the printing center of one column of numbers to the printing center of the next column of numbers; and in the former case, the lever 18 would merely cause the carriage to be returned to its engagement with the first stop lug, to say nothing of the fact that nothing would have been accomplished in the way of printing any part of a column of numbers at the first stop position?

A. You are correct.

X-Q. 34. In "Complainant's Exhibit, Defendant's Machine," how many columns of numbers can you print upon a sheet of paper (as wide as the machine will hold), and what will be the space from printing center to printing center of the parallel columns, if you print them at the lateral intervals determined by the stop devices provided on the laterally movable carriage?

A. Seven columns can be printed, and the distance from printing center to printing center is approximately one and three-fourths inches.

X-Q. 35. In printing such parallel columns on wide paper with "Complainant's Exhibit, Defendant's Machine" what mechanism do you manipulate in shifting the carriage laterally the width of a column space? Please describe it fully and also state the exact manner of operating it.

A. Assuming that the first column has been printed with the carriage locked in place by the notched gauge bar and the locking stud, and the next column is to be printed with the carriage locked by the next succeeding

Deposition of Defendant's Witness, Arthur S. Browne.

notch of the gauge bar (which I understand the present question to ask), then the procedure would be as follows:

First the user rocks the gauge bar backwardly so as to free it from the locking stud. He can do this either by catching hold of either one of the external knobs on the shaft of the notched gauge bar at its opposite end; or he can use both knobs; or, he need not use the knobs, but may push the notched gauge bar back directly with one or both hands. While thus holding the gauge bar disconnected from the locking stud, he can push or pull the carriage along by hand, and he can adopt several expedients to insure locking the carriage at the next notch. He can move the carriage while still pressing on the gauge bar (or its knobs) until he thinks the carriage is in the right place; then he can relieve the pressure on the gauge bar and move the carriage back and forth until the desired notch catches the locking stud. Or he can move the carriage in the desired direction just a short distance sufficient to get the first notch out of register with the locking stud; he can then relieve the gauge bar from his hand pressure so that the edge of the bar will bear upon the locking stud; and he can then pull or push the carriage forward, and the next notch in the gauge bar will automatically engage the locking stud provided the carriage is not moved too rapidly.

X-Q. 36. What further piece of mechanism causes the shifting carriage to thus "automatically" station itself at the next column-printing position without requiring the operator to "think" about the exact distance between the printing centers of the successive columns?

A. The notched edge of the gauge bar is pressed by a spring toward the locking stud. Accordingly, if the user relieves the gauge bar from manual pressure; then when the user pushes or pulls the carriage to the right place (provided he doesn't do it too rapidly) the spring

Deposition of Defendant's Witness, Arthur S. Browne.

causes the gauge bar to again interlock with the locking stud.

X-Q. 37. And yet you think that mechanism, comprising at least a gauge bar and notches spaced in that bar and knobs on the end of that bar and a stud for engaging those notches and a spring constantly tending to rock the bar into engagement with the stud, all of which "automatically" aids to save the operator "thinking" in spacing the columns on the paper, is nevertheless not "mechanism for shifting the carriage laterally to width of a column-space"?

A. Certainly it is not.

Instead of the defendant's notched gauge bar with its knobs and spring and the co-operating locking stud constituting mechanism for "shifting" the carriage laterally, they do just the opposite, namely, they *prevent* the carriage from being *shifted* laterally. They constitute a locking device the purpose of which it is to prevent the carriage from being shifted. They have to be rendered inoperative before the carriage can be shifted laterally. The only thing that imparts any shifting movement to the carriage at all is the hand of the user pushing or pulling upon the carriage itself after the locking devices have been disconnected from each other.

X-Q. 38. And these devices have to be left in operative connection with each other, as a matter of fact, do they not, in order to "automatically" save the operator from "thinking" when the desired column width spacing is accomplished?

A. Yes, provided the user first thinks to relieve the notched gauge bar the pressure of his hand.

X-Q. 39. And yet you think that the Gathright typewriter patent does contain "mechanism for shifting the carriage laterally the width of a column-space," notwithstanding the fact that the Gathright machine cannot

Deposition of Defendant's Witness, Arthur S. Browne.

complete the printing of even one column of numbers unless the operator re-positions the carriage by hand for the first figure of each number in a column?

A. Yes.

X-Q. 40. Neither the "Complainant's Exhibit, Defendant's Machine" nor the machine shown in the drawings of the Felt patent sued upon has any such column printing incapacity as that stated in my last question, has it?

A. No.

X-Q. 41. Do you think a machine can possibly have "mechanism for shifting the carriage laterally the width of a column space" unless it has devices that automatically aid the operator in definitely positioning the carriage for one after another of a series of parallel columns,—within the meaning of claim 4 of the patent in suit?

A. Certainly. The operator need not have anything to do at all with determining the extent of the movement of the carriage which may be determined entirely by the automatic action of the mechanism itself. For example, the carriage shifting mechanism might be electrically controlled and all the user would have to do would be to press a button to close the electric circuit.

X-Q. 42. Your operator would still be working to the extent of touching the button, wouldn't he?

A. Yes.

X-Q. 43. And he is working when he presses the hand lever E in the drawings of the Felt patent isn't he?

A. Yes.

X-Q. 44. And he is still working when he presses any part of the paper carriage in "Complainant's Exhibit, Defendant's Machine" for the purpose of moving it laterally, isn't he?

A. Yes.

X-Q. 45. And in any of these instances, you do not

Deposition of Defendant's Witness, Arthur S. Browne.

have "mechanism for shifting the carriage laterally the width of a column space" unless you have devices for definitely positioning the carriage for the printing of one after another of parallel columns of numbers, do you?

A. The defendant's machine does not have any mechanism for shifting the carriage laterally at all, and defendant's machine can be used to print columns of numbers without reference to the carriage locking mechanism at all. Therefore I answer the question in the negative.

X-Q. 46. Don't you think that an inkwell is a mechanism for writing, even if you do also use a pen?

A. It certainly never occurred to me to so define an inkwell but I shall not quarrel with the statement. I might add, however, that if two hand cars were to be used on a railroad track and one of them had mechanism such as is frequently employed on hand cars to enable the rider on the car to turn a crank and through intermediate gearing drive the car, such car would have mechanism for moving it; whereas if the second car could only be moved by a man walking on the track and pushing the car in front of him such car would not have mechanism for moving it, even though both cars were equipped with brakes which had to be held away from the wheels before they could be moved at all.

X-Q. 47. And if the brakes were essential to the stopping of either car in a definite place, you think that the brakes on the car pushed only by hand would not in any sense be "mechanism for moving the car the definite space"?

A. Certainly not. They would not help to move the car at all. They would simply stop the car at a definite place.

X-Q. 48. Do you mean to say they would have no utility as a part of the necessary "mechanism for moving the car *the definite space?*"

Deposition of Defendant's Witness, Arthur S. Browne.

A. Certainly they would not. There being no mechanism for *moving* the car the brakes could not constitute a part of a non-existing mechanism.

X-Q. 49. And so you think you can have mechanism for shifting an object from one to another of two definite positions, and yet that the devices that determine the positioning of the object at the successive definite positions are no part of such mechanism?

A. They may or may not be, depending upon the character of the device. Of course, if a machine does have a mechanism for moving it the instrumentalities which stop the mechanism at a definite place may be part of that mechanism.

X-Q. 50. Now, which seems to you fairly the more important feature of the clause "mechanism for shifting the carriage laterally the width of a column space" (in Felt's claim 4),——the mere lateral moving of a carriage, which is a thing that has been done with typewriter carriages for a generation; or the feature of definitely positioning the carriage for the complete printing of one after another of a series of parallel columns of various numbers, which is a thing done in the Felt machine, and this defendant's machine, but obviously not done in any machine that you have been able to point out at a date in or prior to 1890?

A. It seems to me that both things are essential so far as the matter under consideration is concerned, and fundamentally the movement of the carriage is the more important because it cannot either move a definite distance or be stopped in its movement at the definite distance unless it is capable of being moved. What Felt did was to provide a mechanism which in itself performed both offices, namely, it moved the carriage and moved it through a definite extent.

X-Q. 51. Even under this view that you state, don't

Deposition of Defendant's Witness, Arthur S. Browne.

you think that, for instance, the guide mechanisms that enabled defendant's carriage to work laterally are mechanism for shifting the carriage, taking the word "for" in one of its common uses?

A. No.

X-Q. 52. Don't you think a wheel is a mechanism for shifting a wagon; whether or not the wagon has other mechanism on it that is engaged in shifting?

A. No.

X-Q. 53. What is the wheel on a wagon for if not for the shifting of the wagon?

A. They are devices which reduce the amount of labor involved in shifting the wagon.

X-Q. 54. Do you think you can reduce the labor of carrying a weight without in some manner helping to carry it?

A. No.

X-Q. 55. In one of your answers on your direct examination, touching upon claim 2 of the patent sued upon, you referred to the file wrapper and contents of said patent and stated that "On February 13, 1899, an amendment was presented including a substitution of patented claim 2 with its limitation to 'devices for impressing the paper upon the type' for original claim 2 which did not contain that limitation." A fuller statement of what the file wrapper contents shows in respect to this matter would show, would it not, that claims 1 and 2 were originally presented without any reference in them to the "side by side" printing types, and then the Patent Office rejected them "as being met by almost any ordinary typewriting machine", and further rejected them "on reference to the patent to Pike, No. 595,864", and then Felt, to distinguish from the typewriter rejection, re-wrote the claim in the following form:

> "1. The combination with the printing mechanism adapted to print two or more characters simulta-

Deposition of Defendant's Witness, Arthur S. Browne.

neously and side by side, of a laterally movable paper carriage, devices for feeding the paper longitudinally mounted in said carriage, and automatic mechanism acting in any position of the carriage to actuate said feeding devices in the line spacing movements, substantially as specified."

"2. The combination with a series of type arranged to print side by side, devices for impressing the paper upon the type, a laterally movable paper carriage adapted to position the paper for the different columns, feed rolls for moving the paper longitudinally past the type, and means for actuating said rolls, substantially as specified."

and to overcome the rejection on the reference to the Pike patent, and also to prevent rejection on the Hiett patent, No. 580,863 (which applicant voluntarily mentioned in his communication to the Patent Office), Felt presented an affidavit to the effect that his invention antedated the applications for both the Pike and the Hiett patents; and then in a later communication applicant voluntarily struck out of the above-quoted claim 1 the unnecessary limiting words "simultaneously and", thus leaving both claim 1 and claim 2 in the exact form in which they were passed to issue in the patent. Is this correct?

A. Yes, except that there is no explicit statement in the file wrapper and content that claims 1 and 2 were re-written to distinguish from the rejection upon "almost any ordinary typewriting machine", although that I think can be fairly inferred as the reason for re-writing claim 1 and as one of the reasons for re-writing claim 2.

X-Q. 56. Before the words "simultaneously and" were voluntarily stricken out of the re-written claim 1, those words were one thing that distinguished that claim from the re-written claim 2, were they not?

A. Yes.

X-Q. 57. And after said words "simultaneously and" were stricken out of said re-written claim 1, the "feed rolls" in claim 2 were still a thing that distinguished

Deposition of Defendant's Witness, Arthur S. Browne.

claim 2 from claim 1, were they not—since claim 1 does not specify "rolls" as the specific required form of any devices for feeding the paper longitudinally?

A. That was one of the distinguishing features between the two claims.

X-Q. 58. What do you think was any other?

A. Claim 1 specified "automatic mechanism acting in any position of the carriage to actuate said feeding devices in the line spacing movements", whereas claim 2 simply calls for "means for actuating said rolls".

Claim 2 contains the specific recitation that the carriage is "adapted to position the paper for the different columns", and this statement is not in claim 1.

Claim 1 recited broadly "printing mechanism adapted to print two or more characters side by side", which is sufficient to define the printing mechanism of the Pike patent, whereas claim 2 requires specifically "a series of type arranged to print side by side" and "devices for impressing the paper upon the type", thus identifying a particular printing mechanism not in the Pike patent.

X-Q. 59. How about the Hiett patent which the applicant voluntarily mentioned?

A. The phraseology of both claims with regard to the printing mechanism applies to the Hiett patent.

X-Q. 60. And Hiett is earlier than Pike?

A. Yes.

X-Q. 61. So that applicant could apparently have had no thought of so drawing claim 2 as to avoid the Pike machine, when he voluntarily mentioned this still earlier Hiett machine, which you say claim 2 does cover, and at the same time retained claim 1, which you say covers both Pike and Hiett?

A. He certainly did have such a thought, as unmistakeably shown by the remarks presented which I have heretofore quoted.

Felt apparently desired to get his patent on an *ex parte*

Deposition of Defendant's Witness, Arthur S. Browne.

showing as to the date of his invention without provoking an interference with either the Pike or the Hiett patents, which would have involved the taking of testimony with the possibility of losing the interference.

Under the practice in the Patent Office interferences are not instituted unless the opposing parties are making claims directed to the same substantial subject matter. Accordingly, under this Patent Office rule it became possible for an applicant who files his application at any time within two years after the grant of his rival's patent to obtain claims which would dominate his rival's structure by *ex parte* proceedings of which his rival knows nothing, provided only he draws his claims different, so that they will not have substantially the same significance as any claims in the rival's patent.

In the present instance, Felt ran no danger of an interference with Hiett as to either claim 1 or 2, because the Hiett patent contained no claim which is even indirectly directed to the subject matter of these claims. Accordingly, Felt could get two claims which would dominate Hiett without danger of an interference.

He was equally safe in connection with his claim 1 so far as Pike was concerned, because Pike had no claim which was directed to the subject matter of claim 1.

Claim 2, however, might have been susceptible of being regarded as directed to the same general subject matter as claim 1 of the Pike patent, except for the difference in the printing mechanism, and, accordingly, the remark which I have quoted call attention to the specific element of the Pike claim which rendered his printing mechanism different from that of Felt's second claim. Evidently, had Felt been content to rely solely on his assertion of priority it would have been unnecessary for him to point out a distinction over Pike.

The answer is objected to as in tenor a mere argu-

ment of a counsel for the defendant, rather than the testimony of a mechanical expert.

Deposition of Defendant's Witness, Arthur S. Browne.

X-Q. 63. As a cold-blooded fact, is there a single claim in either the Pike or the Hiett patent, in any manner relating to a laterally movable paper carriage and at the same time readable upon the machine shown in the drawings of the patent sued upon, if you read the Pike and Hiett claims in the meaning in which each of those two patents respectively intends them?

A. There is no claim in the Hiett patent which is directed to the laterally moving carriage at all.

Literally, claims 1 and 2 of the Pike patent are applicable to the Felt machine unless the statement that the rotary platen or "support" is adapted to be set in different positions "opposite the printing type" is to be construed narrowly so as to require the platen to receive the impact of the types. If, however, these claims are to be construed as to including bringing successive portions of the platen or paper support opposite the position which the types occupy, then those claims would be applicable to the Felt machine.

X-Q. 64. Is there any platen in the machine shown in the drawings of the Felt patent, or are the type faces opposed, on the other side of the paper, by the individual type hammers instead of by a platen?

A. To the extent that the paper is supported by the feed rolls of the Felt machine such feed rolls afford a support for the paper which enables the paper to be brought into different positions in front of the types. All that claim 1 of the Pike patent calls for is a "support", and while claim 2 refers to a rotary "platen" it specifies only its supporting office and does not specify its office of opposing the printing pressure.

If the "rotary platen" of claim 2 of Pike is to be construed as involving the office of supporting the paper against the printing pressure, then Felt has no such ro-

Deposition of Defendant's Witness, Arthur S. Browne.

tary platen, because Felt's particular distinguishing printing mechanism, as recited in claim 2 of his patent, demands devices which impress the paper upon the type, and his particular devices for that purpose include separate hammers which move toward the types and force the paper toward the types.

X-Q. 65. Does the machine shown in the drawings of the Felt patent contain any platen?

A. That depends entirely upon the significance of the word "platen". It is frequently used in the printing art to include any device which is on one side of the paper when the types are at the other side. Hence, in that broad sense Felt's individual hammers constitute platens. On the other hand, in a particular organization a mere supporting device may be called a platen.

X-Q. 66. Are Felt's type hammers capable of being set in different lateral positions opposite the type?

A. No, that constitutes an important difference between the Felt construction and that of the machine of the Pike patent and of the defendant's wide carriage machine.

X-Q. 67. You are a Patent Lawyer and a Patent Solicitor, Mr. Browne?

A. Yes.

X-Q. 68. Do you think that an applicant who believes himself entitled to broader claims than any he finds in a prior issued patent, would reasonably be expected to make in his own application the narrower claim of such earlier patent, or try to make them, for the purpose of inviting an interference contest in the Patent Office, with an issued patent, and with the result that the issue of his own patent would be delayed for years, during such interference, and the burden of proof would rest upon him instead of the issued patent, and in the end, if successful, he would only acquire some claims of narrower scope than

Deposition of Defendant's Witness, Arthur S. Browne.

the claims he would rightly be entitled to whether he went through such interference or not?

A. Of course it would be reasonable under the existing practice in the Patent Office which permits the later applicant to get broader claims than the rival patentee without a contest. It is, however, rather tough on the existing patentees; and at one time in the practice of the Patent Office it could not be done because in such event the patentees were given the opportunity to file re-issue applications making the claims and thus instituting an interference, a practice which was upset by the Supreme Court by its decisions holding patentees rigidly accountable for delay in applying for re-issues, and preventing re-issues which would affect adverse rights accruing after the issuance of their patents.

X-Q. 69. The patentee of the patent earlier issued has his remedy, has he not, in the courts, if he thinks that any of his claims cover machines made under the patent of the later applicant?

A. Yes, but he may be under the unfortunate situation that his patent has no claim sufficiently comprehensive to define his rival's machine (as in the case of the Hiett patent, No. 580,863), while he himself is open to attack by his less diligent rival who through the greater skill of himself or his solicitor has obtained the comprehensive claims.

X-Q. 70. And have you ever heard of either the patentee or owner of the Pike patent having ever attempted to sue Mr. Felt or any of Mr. Felt's companies for any of the tens of thousands of machines that they have made for many years past under and in accordance with the very Felt claims in the present controversy.

A. No, I have no knowedge or information on the subject one way or the other.

X-Q. 71. Among the three hundred or so patent suits

Deposition of Defendant's Witness, Arthur S. Browne.

that you say you have testified in, how many have related to adding or printing adding machines?

A. None.

X-Q. 72. Have you ever been engaged in the business of making or manufacturing adding machines or printing adding machines?

A. No.

X-Q. 73. And yet you think you are not mistaken in your expression of opinion that, in or before 1890, there was no invention in taking the adding machine shown in Felt patent 441,233 and converting it into a machine consistent with the subject matter of claim 1 of the patent sued upon?

A. I am not mistaken. Indeed, I might add, that the claims which I have considered have no relation whatever to the adding feature. Claims 1 and 2 simply have to do with the printing in parallel columns and do not involve the adding features at all since the printing is done just the same whether the adding features are utilized or not. And claim 4 is directed simply to a tabulating machine without even any reference to side by side printing. Accordingly, while the "yet" in your question might make me hesitate in such an unqualified answer, if the adding mechanism itself were under consideration, I do think that my past experience has been of some value to me in expressing my views, because I have testified in a great many suits on printing presses, typewriting machines and time recorders wherein numbers are printed in parallel columns.

X-Q. 74. And in this deposition have you given us the best results of your previous information and experience and investigation of the art to which the claims in controversy relate?

A. I have.

Cross-examination closed.

Re-direct by Mr. Cooper.

Deposition of Defendant's Witness. Arthur S. Browne.

By Mr. Cooper:

R-D. Q. 75. Have you seen and examined the "Complainant's Exhibit, Drawings of the 1890 Machine" offered by the comlainant as an exhibit in connection with the deposition of Mr. Felt, taken in suit No. 28,782 between the Comptograph Co. and Burroughs Adding Machine Co., and which may by agreement be stipulated into this suit? I show you the printed record in said suit. If you are familiar with these drawings will you please state whether in the printing mechanism there illustrated the printing types of the several figures of the number to be printed were operated simultaneously or in succession?

A. In quick succession.

R-D. Q. 76. Is this the method of operation set forth in claim I inserted in the application for the patent in suit by the amendment, paper 44, dated February 11, 1899, and filed February 13, 1899?

A. Not as I understand that claim which, as it then stood, specified "printing mechanism adapted to print two or more characters *simultaneously* and side by side."

R-D. Q. 77. Does this claim 1 of the amendment referred to, after the words "simultaneously and" were voluntarily stricken out by the amendment, as stated by Mr. Clarke in X-Q. 55, read upon the drawings referred to?

A. Yes.

R-D. Q. 78. In your direct examination you said, in the course of your answer to Q. 7, and in comparing claim 4 of the patent in suit with the disclosures of Gathright patent 436,916: "It was a common arrangement in the Remington typewriter then as now to operatively connect the feed ratchet feed pawl with the hand lever 8 so that the platen could be rotated for line spacing concurrently with the lateral movement of the carriage." Have

Deposition of Defendant's Witness, Arthur S. Browne.

you found and can you produce in connection with this answer a Remington typewriter that will illustrate the exact construction in this regard, and also in regard to the printing mechanism and its operation as known to you prior to 1890?

A. I have been familiar with the Remington typewriting machines in my own office, and in addition have been engaged in several typewriting suits on behalf of the manufacturers of the Remington typewriter. This morning on my way to this office I chanced to pass a place where second-hand typewriters are sold and noted in the window one of the old style Remington machines, the purchase of which I suggested and which I now produce. This typewriter has the mechanism which is illustrated in the Gathright patent No. 436,906, and the perspective drawing Fig. 1 of the Gathright patent illustrates the line spacing and printing mechanism of this machine. This machine accordingly serves to illustrate the printing mechanism and the line spacing mechanism of the Remington machine which were in existence in 1889 when the Gathright application was made. This is a machine of the kind which was known as the No. 2 Remington machine, and it has the serial number "1770" on the framework of the machine immediately above the fixed scale bar in front.

R-D. Q. 79. When did you first become familiar with the No. 2 Remington machine?

A. It was at least as early as 1886.

R-D. Q. 80. Have you any knowledge, as a matter of general information, how long this No. 2 Remington continued on the market, and can you give an idea of the numbers that were sold?

A. It continued on the market for a good many years. In fact I have known of their being in practical daily use within the last two or three years. I know they were in

Deposition of Defendant's Witness, Arthur S. Browne.

general use for over ten years after I purchased my first one, and many thousands of them have been marketed.

By DEFENDANT'S COUNSEL: I offer in evidence the Remington typewriter referred to and same is marked "Defendant's Exhibit, Remington No. 2 Typewriting Machine."

By Mr. CLARKE:

R-X. Q. 81. Is claim 1 of the Felt patent sued upon expressed in such terms as to be consistent with a printing mechanism having side by side types, irrespectively of whether the printing impressions are made from these types simultaneously, or nearly simultaneously, or in succession?

Objected to as incompetent and calling for a conclusion of law.

A. Yes.

R-X. Q. 82. In Felt patent 441,233, were the printing impressions made from the side by side printing types simultaneously or in succession?

A. I have not studied this patent carefully in regard to this, but as I understand it the types for printing a single number print one by one as their respective keys are struck.

R-X. Q. 83. And in the Felt, patent 441,232, it is proposed, is it not, to print from the side by side types by a single hammer platen acting upon all of them simultaneously?

A. Yes.

By Mr. COOPER:

R-R-D. Q. 84. Is there any substantial difference in the operation of printing a series of figures constituting a number on this Remington typewriter you produce, or in the mechanism disclosed in the Felt patent 441,233?

A. Yes, in the first place in the Remington typewriter the paper is held by the rotary platen and the types are moved toward the platen encountering the inking ribbon

Deposition of Defendant's Witness, Arthur S. Browne.

on its underside and forcing it against the paper thereby doing the printing; whereas in the machine of this Felt patent 441,233 the paper is located between the types on one side and the individual hammers on the other side, and the hammers force the paper towards the types and do the printing by means of an inking ribbon interposed between the paper and the types and in the path of the movement of the hammers.

Also in the Remington typewriter there is lateral shifting of the paper carriage as each key is struck, and this is not the case with the machine of the said Felt patent.

By Mr. Clarke:

R-R-X. Q. 85. Are there any side by side printing types in the Remington typewriter you refer to?

A. No.

Deposition closed.

Adjourned subject to notice.

Stipulation as to certain of Defendant's Patent and Other Exhibits.

SUPREME COURT OF THE DISTRICT OF COLUMBIA.

Comptograph Company, *Complainant*, vs. Adder Machine Company, *Defendant*. } In Equity. No. 29,220.

STIPULATION.

It is hereby stipulated by and between counsel, for the purposes of this suit, as follows:

1. That the defendant may now offer in evidence the copies of each of the patents referred to by the witnesses Magrane, and Browne in their respective depositions, the same to be marked by the notary as defendant's exhibits, and identified by the patentees' names and numbers of each of said patents.

Stipulation as to certain of Defendant's Patent and Other Exhibits.

2. That the defendant may now offer in evidence a certified copy of the file wrapper and contents of the application for patent of the Felt patent in suit, No. 628,176, and the same is marked "Defendant's Exhibit, Certified copy of the Application for Felt patent No. 628,176."

3. That objections heretofore raised by counsel for complainant on the ground that the patents referred to by defendant's witnesses Magrane, Browne and McFarland were not set up in the answer, or that might be so raised, are now withdrawn or waived; and also that the defendant may now amend its answer as per copy attached hereto.

4. That with reference to the patents to Gathright, No. 436,916, dated September 23rd, 1890, Silkman, No. 436,319, dated September 9th, 1890, and Hopkins, No. 517,383, dated March 24th, 1894, that in each case the date of filing the application for said patents printed on the face of the copies put in evidence may be taken as *prima facia* proof of date and fact of filing of the application containing the drawings and description appearing in the patent as issued.

5. That as to "Defendant's Exhibit, Remington No. 2 Typewriting Machine", introduced by defendant in connection with the testimony of the witness Browne, it is agreed that machines identically like said exhibit were regularly sold on the market in the United States in the year 1886, and continuously for some years thereafter, including the years 1889 and 1890.

KERR, PAGE, COOPER & HAYWARD,
Counsel for Defendant.

MUNDAY, EVARTS, ADCOCK & CLARKE,
Counsel for Complainant.

Dated, Dec. 1, 1911.

Amendment to Defendant's Answer.

SUPREME COURT OF THE DISTRICT OF COLUMBIA.

Comptograph Company,
Complainant,
vs.
Adder Machine Company,
Defendant.
} In Equity. No. 29,220.

AMENDMENT TO ANSWER.

Now comes the defendant in the above entitled case and, by agreement of counsel, amends its answer as follows:

On page 13 thereof, after the list of patents following the first paragraph, by adding the following patents:

Dorr E. Felt, No. 366,945 July 19, 1887;
Dorr E. Felt, No. 441,232, Nov. 25, 1890;
Dorr E. Felt, No. 441,233, Nov. 25, 1890;
W. S. Burroughs, No. 388,116, Aug. 21, 1888;
W. S. Burroughs, No. 504,963, Sept. 14, 1893;
W. S. Burroughs, No. 388,118, Aug. 21, 1888;
W. W. Hopkins, No. 517,383, March 24, 1894;
W. H. & W. W. Wythe, No. 445,582, Feb. 3, 1891.

On page 19, after the list of patents following paragraph 2, by adding the following patents:

No. 436,916. J. B. Gathright, Sept. 23, 1890;
No. 420,619, W. S. Burroughs, Feb. 4, 1890;
No. 436,319, E. J. Silkman, Sept. 9, 1890.

On page 20, after the list of names ending with "George Van Beck", by adding the following names:

Wyckoff, Seamans & Benedict (succeeded by Remington Typewriter Company) of and at New York, N. Y., and elsewhere.

J. B. Gathright, of and at Louisville, Kentucky.

W. S. Burroughs, at American Arithmometer Company of St. Louis, Mo., and elsewhere.

Amendment to Defendant's Answer.

E. J. Silkman, of and at Baltimore, Md.

On page 26, after the list of patents following paragraph 2, by adding the following patent:

No. 441,233, Dorr E. Felt, Nov. 25, 1890.

KERR, PAGE, COOPER & HAYWARD,
Counsel for Defendant.

Defendant's Proofs Stipulated in from Burroughs Case.

IN THE CIRCUIT COURT OF THE UNITED STATES, NORTHERN DISTRICT OF ILLINOIS, EASTERN DIVISION.

Comptograph Company, *Complainant,*
vs.
Burroughs Adding Machine Company, *Defendant,*
} In Equity. No. 28,782.

CHICAGO, May 1st, 1908.

Introduction of evidence on behalf of the defendant in the above entitled cause, pursuant to informal notice, and by consent, at Room No. 1625 Monadnock Building, Chicago, Illinois, before Louis B. Erwin, notary public, acting by consent as special examiner in said cause, under the equity rules, beginning at 10:30 A. M., on Friday, May 1st, 1908.

Present: John W. Munday, of counsel for complainant, and Frank P. Davis, of counsel for defendant.

Deposition of Defendant's Witness, Edward Rector, stipulated in from Burroughs case.

EDWARD RECTOR, a witness produced on behalf of the defendant, being duly sworn, deposes and says as follows, in answer to interrogatories by Mr. Davis:

Q. 1. Please state your name, age, residence and occupation.

A. Edward Rector; age, 44; residence, Chicago, Illinois; occupation, attorney-at-law.

Q. 2. What, if anything, did you have to do with the preparation of the application for the Pike patent No. 595,864, which is in evidence in this cause?

Deposition of Defendant's Witness, Edward Rector, stipulated in from Burroughs case.

A. I personally prepared the application for that patent in the spring of the year 1897.

By Mr. MUNDAY: Question and answer objected to as immaterial.

Q. 3. From what did you prepare that application?

By Mr. MUNDAY: Objection repeated.

A. The first nine figures of the drawings and the description of them in the specification were prepared from a full-sized adding machine constructed in accordance with those drawings. Figures 10, 11 and 12 of the drawings of the patent, which illustrates a modified or alternative construction, were prepared either from a second machine embodying such construction, or from a blue-print of a drawing exhibiting such construction. I had both the machine and the blue-print on hand at the time these drawings were prepared, and as they were exactly alike, I cannot say positively from which the drawings were actually made.

Q. 4. What was the machine from which you say the first nine figures of the drawings were prepared?

A. It was a regular Burroughs adding machine, of commercial size and form, having the Pike improvement or attachment applied to it. It was a full-sized, complete, operative machine in every respect, including the improvement or attachment referred to. I may add that the other machine referred to was of the same character, differing from the first one only in the modified or alternative construction of the Pike attachment.

Q. 5. Where were these drawings made, and who made them?

A. They were made in my office, by the draftsman whom I had in my employ at that time. I think his name was Martin H. Olsen.

Q. 6. From what were Figures 10, 11 and 12 of the drawings of the Pike patent made, and who made them?

Deposition of Defendant's Witness, Edward Rector, stipulated in from Burroughs case.

A. They were made by the same draftsman, and either from the blue-print or the second machine referred to.

Q. 7. Have you at hand any contemporaneous record evidence relating to your preparation of the Pike application, which will fix the date at which you prepared it?

A. Yes, I have the original correspondence which I had at the time with the American Arithmometer Company, of St. Louis, for whom I prepared the application, consisting of a letter from that company to me, dated April 5, 1897; a letter from me to the company, dated April 6, 1897; a letter from the company to me, dated May 1, 1897; a letter from me to the company, dated May 3rd, 1897; a letter from the company to me, dated May 5, 1897; a letter from me to the company, dated May 11, 1897; a letter from the company to me, dated May 12, 1897; a letter from the company to me, dated May 19, 1897; a letter from me to the company, dated May 20, 1897; a letter from me to the company, dated May 29, 1897; a letter from the company to me, dated June 1, 1897, and a letter from the company to me, dated June 14, 1897.

I also have here my letter-press copy-book covering the period in which these letters were written, in which I find letter-press copies of all of the letters from me to the company above referred to, and also letter-press copy of a bill which I rendered said company on May 29, 1897, for the preparation of the Pike application, and the cost of the drawings. I have not the original of this bill at hand, but only the letter-press copy of it in my letter-book of that period.

By Mr. Davis: The documents referred to by the witness in the last answer are here offered in evidence, to be marked by the notary collectively as "Defendant's Exhibit Rector-Pike Correspondence," and consecutively numbered 1 to 12, said exhibit including, by stipulation, a copy of the bill re-

Deposition of Defendant's Witness, Edward Rector, stipulated in from Burroughs case.

ferred to by the witness in lieu of the original document, and the same being numbered 13.

For convenience of reference, the above correspondence and the bill are here copied in the record.

No. 1.

"AMERICAN ARITHMOMETER COMPANY,
ST. LOUIS, April 5, 1897.

EDWARD RECTOR, ESQ.,
Chicago, Ill.

Dear Sir:—

We have just written Mr. J. H. Wyeth, 902 Ft. Dearborn Bldg., requesting him to call on you and make an appointment to bring in the Machine left in Mr. Duntley's office recently by Mr. Joseph Boyer, with the Broad printing frame attachment, which Mr. Boyer spoke to you about.

Mr. Boyer explained why he did not have an opportunity to show you the Machine, so we thought best to have Mr. Wyeth come in with it, as he understands fully the workings of the Machine, and might be of some assistance in getting the matter plainly before you.

Mr. Boyer, we believe, left with you a copy of the points brought out by Mr. Pike; we suppose this together with what Mr. Boyer said to you, will enable you to make out the proper applications and claims for covering this device.

We want the papers taken out in the name of William Henry Pike, Jr., inventor.

We are sending you via National Express, prepaid, drawings we had gotten up here of this device, which are not at all correct, but thought we would send them to you, as your man might get some points from them.

We would like you to have *correct* Patent Office drawings made complete of this *device,* as shown in the blue prints recently sent you.

If we have failed to make the matter perfectly plain to you as to what we want, would be glad to hear from you.

Yours truly,
AMERICAN ARITHMOMETER CO.
E. G. LANGHORNE,
Secretary,
J."

Deposition of Defendant's Witness, Edward Rector, stipulated in from Burroughs case.

No. 2.

"EDWARD RECTOR,
1057 Monadnock Bldg.,
Chicago.

CHICAGO, April 6, 1897.

THE AMERICAN ARITHMOMETER COMPANY,
2100 Wash St.,
St. Louis, Missouri.

Gentlemen:—

I have your favor of yesterday, and the package, by express. Mr. Wyeth also called yesterday, and arranged to take up the matter with me next week, stating that it would suit him better then than this week, as it also will me. I will give the case careful attention and endeavor to fully cover it in the application. I do not think I will need any further explanation than I will be able to get from Mr. Wyeth and from the machine and drawings; but if so will advise you.

Yours very truly,

EDWARD RECTOR."

No. 3.

"AMERICAN ARITHMOMETER COMPANY,
EDWARD RECTOR, ESQ.,
Chicago, Ill.

Dear Sir:—

Will you kindly let us know what progress you are making with the drawings, etc., for the Broad printing frame turned over to you by Mr. J. H. Wyeth. We would also like to know whether your draftsman is making the corrected drawings from the device on this Machine, or from the blue print turned over to you by Mr. Joseph Boyer; we hope the latter. However, if he has made them from the device, why let it stand.

We have been looking for you down in this section for some days, and hope to have the pleasure of seeing you soon.

Yours truly,
AMERICAN ARITHMOMETER CO.
E. G. LANGHORNE,
Secretary."

Deposition of Defendant's Witness, Edward Rector, stipulated in from Burroughs case.

No. 4.

"EDWARD RECTOR,
1057 Monadnock Bldg.,
Chicago.

CHICAGO, May 3rd, 1897.

THE AMERICAN ARITHMOMETER COMPANY,
St. Louis, Mo.

Gentlemen:—

I returned this morning from a ten day's absence in the East, and have your favor of the 1st inst. My draftsman has been at work on the drawings while I was away and they will soon be finished. He is making them from the machine and blue print together.

I will try to run down to St. Louis for a day or two, as soon as I can get time, and go over the matter with you, and at the same time see Mr. Boyer about some other things. I cannot say just when this will be, as just now I am dancing attendance on the Court of Appeals at Cincinnati, where I have a case which is likely to be reached any day, but perhaps will not come up until sometime next week. Until that is disposed of I cannot leave home. If I have opportunity to do so I will write up a draft of the application in your case before going to St. Louis.

I regret that I am not able to give more prompt attention to this first business which you have entrusted to me. It is not always that I am so blest with work that I cannot take proper care of all my business.

Yours very truly,

EDWARD RECTOR."

No. 5.

"AMERICAN ARITHMOMETER COMPANY,
ST. LOUIS, May 5, 1897.

EDWARD RECTOR, ESQ.,
1057 Monadnock Bldg.,
Chicago, Ill.

Dear Sir:—

We have your letter of April 3rd and are sorry to note that it will be impossible for you to come to St. Louis for some two weeks yet, as it is most important for us to get this device covered with patents as early as possible. We are now nearly ready to put it on the market, and of course can do nothing of this kind until we are thoroughly

Deposition of Defendant's Witness, Edward Rector, stipulated in from Burroughs case.

covered. We hope your Cincinnati case will soon be off of your hands, and that we will have a letter saying you will be in St. Louis quite soon to see us.

Yours truly,
AMERICAN ARITHMOMETER CO.
E. G. LANGHORNE,
Secretary,
J."

No. 6.

"EDWARD RECTOR,
1057 Monadnock Bldg.,
Chicago.

CHICAGO, May 11, 1897.

THE AMERICAN ARITHMOMETER COMPANY,
St. Louis, Missouri.

Gentlemen:—

I send you herewith Mr. Pike's application upon the broad frame printing attachment for your machine. I would have very much preferred to have had a chance to have gone over this matter with you and Mr. Pike before preparing the application, as I would then have had a better understanding of your views and his concerning it; but in view of Mr. Boyer's trip east and engagements of my own here and elsewhere up to the present time, I saw no prospect of going to St. Louis for several weeks yet, and therefore decided to go ahead with the application and leave it to be revised as may be necessary after you have examined it.

When I wrote you last I told you, in answer to your inquiry, that my draftsman was making the drawings from the machine and the blue-print together, as I had left both of them with him when I went east; but I discovered afterward that the details of construction shown in the blue-print were so different from those in the machine that he had followed the former, and had proceeded so far with the drawings that it was not possible to change them without making an entirely new set. I did not understand from your letters or from my conversation with Mr. Boyer that there were any radical differences between the blue-print and the machine, and therefore did not carefully compare them before setting my draftsman to work. Inasmuch as you preferred to have the blue-print construction shown in the patent, rather than the machine construction, I regret that it has not been

Deposition of Defendant's Witness, Edward Rector, stipulated in from Burroughs case.

done; but so far as the patent is concerned, I do not think there is much patentable difference between the two constructions, and that nearly all of the claims which I have drawn on the machine construction will cover the blue-print construction as well. The main difference I notice between the two is the mounting of the paper carriage upon a bar, with interposed ball bearings, instead of mounting it upon the round rod, but in view of the common use of ball bearings wherever they are desirable, this would not be a broadly patentable difference between the two constructions. If, after going over the matter carefully you think it sufficiently important to do so, I will have a new set of drawings made in accordance with the blue-print, and revise the specification to conform to them. I could not do this, however, without first having a full description of the details of the blue-print construction, or having a machine sent me which embodies that construction.

I send you the specification and claims in rough draft, so that I may readily revise them in accordance with any suggestions or criticisms you may have to offer. I will then have clean copies of them made and sent you for execution.

Yours very truly,

EDWARD RECTOR."

No. 7.

"AMERICAN ARITHMOMETER COMPANY,
ST. LOUIS, May 12, 1897.

EDWARD RECTOR, ESQ.,
1057 Monadnock Bldg.,
Chicago, Ill.

Dear Sir:—

We beg to acknowledge receipt of your favor of the 11th, and also express package containing drawings and Mr. Pike's application upon the Broad Printing Frame attachment. After Mr. Pike has examined same carefully we will report to you.

Regretting your inability to visit St. Louis, and with best wishes,

Yours truly,
AMERICAN ARITHMOMETER CO.
E. G. LANGHORNE,
Secretary,
J."

Deposition of Defendant's Witness, Edward Rector, stipulated in from Burroughs case.

No. 8.

"AMERICAN ARITHMOMETER COMPANY,

ST. LOUIS, May 19, 1897.

EDWARD RECTOR, ESQ.,
1057 Monadnock Bldg.,
Chicago, Ill.

Dear Sir:—

I send you today under separate cover by Nat. Express the drawings and specifications for the broad frame Printing Attachment. I wish to suggest the following slight alterations:

On page 3 of the description, notation #1 says 'Figure 2; the corresponding view of the left side of the Machine, with the swinging frame or paper carriage which carries the platen or impression roll, swung backward from the position shown in figure #1.' Figure 2 does not show the carriage swung backward. Notation # 2; the line 7—7 is not shown in figures 3 and 4 as mentioned here. These are the only corrections I wish to suggest in the text.

Would it not be well to insert a clause in the description claiming some latitude in construction; that is, if you should decide to use the drawings from the Machine which you now have in Chicago.

We will ship to Wyeth & Langhorne, Chicago, to-morrow, a Machine with the broad frame Printing Attachment made after the blue-print which you have, and upon receipt of this Machine Mr. Wyeth will notify you and if necessary send the Machine to your office for examination.

We wish to leave the question of making drawings from this latest construction to your judgment, and if after an examination of the attachment, you think it better to make new drawings, please have them made at once. My experience in such matters is quite limited, but as far as I am able to judge, while the description as written does not apply exactly to the latest construction; all the features of the latest construction are plainly described.

Please let us know as early as you are able to give the

Deposition of Defendant's Witness, Edward Rector, stipulated in from Burroughs case.

matter your attention what you think of the necessity of making new drawings.

Yours truly,
AMERICAN ARITHMOMETER CO.
E. G. LANGHORNE,
Secretary,
J."

Dict. W. H. P., Jr.,

No. 9.

"EDWARD RECTOR,
1057 Monadnock Bldg.,
Chicago.

CHICAGO, May 20, 1897.

THE AMERICAN ARITHMOMETER COMPANY,
St. Louis, Missouri.

Gentlemen:—

I returned this morning from a trip to Cincinnati and Detroit, and have your favor of yesterday and the application papers by express. I note what you say and will take up the matter tomorrow or next day and write you.

Yours very truly,
EDWARD RECTOR."

No. 10.

"EDWARD RECTOR,
1057 Monadnock Bldg.,
Chicago.

CHICAGO, May 29, 1897.

THE AMERICAN ARITHMOMETER COMPANY,
St. Louis, Missouri.

Gentlemen:—

I send you herewith the final papers on your broad frame printing attachment application. Upon further consideration and comparison of the two forms or constructions of this attachment, I concluded that the best thing to do would be to illustrate and describe the second or later form as a modification of or improvement upon the original form, thereby leaving us to base our broad claims on the earliest construction, but at the same time making it perfectly clear in the patent that they are intended to cover both constructions. To that end I have had an additional sheet of drawings made, and added a description of the later construction, and have gone over

Deposition of Defendant's Witness, Edward Rector, stipulated in from Burroughs case.

the claims and revised such of them as I found necessary, so that nearly all of them now apply equally to both constructions, as well as covering wide variations from either.

Mr. Pike will sign the application in the three places indicated in pencil, and swear to it before a notary public; also executing the assignment to your Company, if that is the arrangement. He will also sign the drawings, and have them witnessed by two witnesses.

I understood from Mr. Boyer that you would file the application through the attorneys who have been doing your work, and if so you will forward it to them when duly executed. If, however, you prefer not to place it in their charge, you can send it direct to the Patent Office, with a draft for $16, requesting that $15 of the amount be applied to the first government fee, and the remaining $1.00 to the fee for recording the assignment. A receipt for the application will be sent you, and in about two months you will receive an action upon it rejecting such of the claims as the Examiner can find references to meet. You can then determine whether to place the application in the hands of your attorneys, or prosecute it otherwise.

I send with the papers a carbon copy of the application and assignment, which you can keep for future reference. I also enclose memorandum of services and expenses to date, for which you can send me a check at your convenience.

Yours very truly,

EDWARD RECTOR."

No. 13.

"CHICAGO, May 29, 1897.

THE AMERICAN ARITHMOMETER CO.

To EDWARD RECTOR, Dr.

To original preparation of broad frame printing attachment application	$100.
To revision and addition of modification, same,	25.
To six sheets of drawings for same	30.
	$155."

Deposition of Defendant's Witness, Edward Rector, stipulated in from Burroughs case.

No. 11.

"AMERICAN ARITHMOMETER COMPANY,
ST. LOUIS, June 1, 1897.

EDWARD RECTOR, ESQ.,
Chicago, Ill.

Dear Sir:—

We have your letter of the 29th, also package sent by express containing papers on our broad printing frame attachment, specification, etc. Mr. Pike has gone over the application papers and says they are very satisfactory.

We note your suggestions about filling out application, etc., and will follow instructions when these papers are prepared to be sent on to Washington.

Your bill for this work will be paid on our regular pay day, June 10th.

Yours truly,
AMERICAN ARITHMOMETER COMPANY,
E. G. LANGHORNE,
Secretary,
J."

No. 12.

"AMERICAN ARITHMOMETER COMPANY,
ST. LOUIS, June 14, 1897.

EDWARD RECTOR, ESQ.,
1057 Monadnock Bldg., Chicago, Ill.

Dear Sir:—

Enclosed find our check for $155., in payment of bill rendered May 29th. In some way your bill was overlooked, as we left it attached to your letter, hence the delay.

Yours very truly,
AMERICAN ARITHMOMETER CO.
E. G. LANGHORNE,
Secretary,
J."

Q. 8. Who is, or was, the Mr. Joseph Boyer who is referred to in said correspondence?

A. Mr. Boyer was a manufacturer at St. Louis, for whom I was doing considerable work at that time in other lines. He was a stockholder of the American Arithmo-

Deposition of Defendant's Witness, Edward Rector, stipulated in from Burroughs case.

meter Company, and very active in its affairs, and I believe it was at his instance that I was employed to prepare the Pike application. I had never done any work for the company prior to that time.

Direct examination closed.

Cross-Examination by Mr. Munday.

X-Q. 9. The American Arithmometer Company referred to in the correspondence was the predecessor in business of the Burroughs Adding Machine Company, the defendant herein. Was that right?

A. Yes.

X-Q. 10. Are you an officer or director of the defendant company?

A. Yes, a director.

X-Q. 11. Are you also a large stockholder?

A. I am a stockholder, but there are a number of larger holdings in the company than mine. I have a substantial interest in the company.

X-Q. 12. Who was Mr. Duntley, in whose office the letter No. 1 states that the machine was left by Mr. Boyer?

A. Mr. Duntley, whose full name is John W. Duntley, is now, and I believe was then, the president of the Chicago Pneumatic Tool Company. At that time Mr. Boyer manufactured all of the pneumatic tools sold by the Chicago Pneumatic Tool Company, and Mr. Duntley, or that company, was his selling agent.

X-Q. 13. What Mr. J. H. Wyeth of 902 Fort Dearborn Building is it that is referred to in this letter No. 1, and who was requested to call on you?

A. That was Mr. John H. Wyeth, a brother of Mr. Harry B. Wyeth, who has testified in this case. Mr. John H. Wyeth was at that time, I believe, the sales agent of the American Arithmometer Company at Chicago. I be-

Deposition of Defendant's Witness, Edward Rector, stipulated in from Burroughs case.

lieve he is now the sales agent of the Comptograph Company, the complainant, at New York City.

X-Q. 14. The letter No. 1 says that the writer is sending you drawings of the machine "which are not at all correct." Did you get those incorrect drawings?

A. I presume I did, and my recollection of them is that they were a crude and improperly prepared set of Patent Office drawings, on card board or bristol board, representing some effort which had been made to have the Patent Office drawings for the Pike application prepared at the company's factory at St. Louis.

Recess for luncheon until 1:30.

Met pursuant to adjournment. Present as before.

X-Q. 15. Do you know what became of these crude and incorrect drawings?

A. No, I do not. I had forgotten all about them until I looked up this correspondence for the purposes of this testimony. I then made search to see if they were about my office, but could not find them. They may have been returned to the Arithmometer Company, although I find no reference to a return of them in any of the correspondence; or they may have been thrown away at the time the application was prepared.

X-Q. 16. Have you still in your possession the file of this application for the Pike patent?

A. I thought I had, until I looked for it for the purposes of this case. I have been unable to find it. Some years ago I took all my office files of old applications and packed them up and sent them out to my residence and stored them in the cellar or basement of it. I searched through these old files there recently, expecting to find this Pike file, but did not; and I have also looked everywhere in my office where I thought it might be, without finding it.

Deposition of Defendant's Witness, Edward Rector, stipulated in from Burroughs case.

X-Q. 17. Did you find other of your office files contemporary with the file of the Pike patent?

A. I am reasonably sure that I found many files of the year 1897, for instance, although I took no note of the date of them, because they were not stored away in any chronological order; and I simply had to go through hundreds of files, covering a period of a good many years.

X-Q. 18. You are not sure, then, that the file is not still there among the other files, are you?

A. Yes, I am, because I looked at every file I had there and did not find the file of this Pike application.

X-Q. 19. How many files did you have there, approximately?

A. I did not count them, and have no very definite idea of the number, but I should think there were several hundred. I remember that on one occasion, after the files had been stored in the basement of my residence, I was requested by the National Cash Register Company to send it all of the files which I had of its old applications, and I think there must have been more than a hundred, possibly two hundred, of those, which I picked out and shipped to that company at Dayton, Ohio. My impression is, judging merely from the size of the pile of them, that those files constituted about one-half of all the files I had there.

X-Q. 20. When did you send these files to the National Cash Register Company?

A. Within the past year, I believe.

X-Q. 21. Did you see the file of the Pike application at that time?

A. No, I do not recall having done so. In fact, I think I had made some search for the Pike file before the occasion of sending these files to Dayton; but I made a later search for it as well.

Deposition of Defendant's Witness, Edward Rector, stipulated in from Burroughs case.

X-Q. 22. What was the occasion of the first search that you made for the Pike file, and when was that made?

A. I do not remember the exact occasion or date, beyond the fact that I wished to refer to the file for some purpose, and thought I could find my old office file more readily or more quickly than I could procure a copy of the file and contents of the application from the Patent Office. Failing to find the old office file, however, I remember that I did procure a copy from the Patent Office.

X-Q. 23. Will it refresh your recollection any as to the occasion of your hunts for the file of the application of the Pike patent if I call your attention to a letter from Munday, Evarts & Adcock to the American Arithmometer Company, dated October 18, 1900, and which I will ask you if you ever saw?

A. I remember the letter in question very well, or the circumstance that some such letter was written and was referred to me by the American Arithmometer Company; but it was not in connection with that matter, or at any time near that date, that I made the search for the Pike file to which I have referred. The search I had in mind must have been five or six years later.

X-Q. 24. This letter is a notification from the Felt & Tarrant Manufacturing Company to your client that the tabulating-adding machine manufactured by your client is an infringement upon letters patent No. 628,176, granted to Mr. Felt. Did you answer that letter?

A. I have no doubt I did.

X-Q. 25. Can you produce a copy of your answer?

A. I presume I could find such copy among my old letter books, but as the original is doubtless in your possession, and you have produced and submitted to me here a copy which you say you have made from such original, I am quite willing, subject to correction if any error be found, to accept your copy as a true copy of the original.

Deposition of Defendant's Witness, Edward Rector, stipulated in from Burroughs case.

X-Q. 26. I have here a copy of thirteen letters which I have marked A, B, C, D, E, F and G, H, I, K, L, M, N. A purports to be a letter from Munday, Evarts & Adcock to the American Arithmometer Company; B and C, dated October 20th and October 26th, 1900, from Edward Rector to Munday, Evarts & Adcock; D, dated November 1, 1900, from Munday, Evarts & Adcock to Mr. Edward Rector; E and F, dated, respectively, November 3 and December 28th, 1900, to Munday, Evarts & Adcock, from Edward Rector; G and H, dated January 8th and October 4th, 1901, from Munday, Evarts & Adcock, to Edward Rector; I a letter from Mr. Rector to same, dated October 7th; K a letter from Munday, Evarts & Adcock, to Edward Rector, dated January 9th, 1902, and Mr. Rector's reply, January 10th, 1902; L, a letter from Munday, Evarts & Adcock, to Mr. Edward Rector, dated January 18th, 1902; M, a letter dated February 20th, 1902, from Rector & Hibben, to Munday, Evarts & Adcock; N, dated February 27th, 1902, a letter from Edward Rector, to Messrs. Munday, Evarts & Adcock. Do you consent that these copies are correct?

By Mr. Davis: The question is objected to as irrevelant and immaterial, and not germane to the direct examination.

A. I assume, from your having produced them here, that these copies are correct copies of letters they purport to represent; but inasmuch as you or your clients presumably have in your possession the originals of all of the letters written by me to you or your firm, I should like to identify those copies by reference to the originals before admitting or testifying that they are true copies. There are no doubt copies of all the letters written by me in my old letter-books, but I do not know at present where those books are. They may be stored somewhere in my office, or they may be (as I know some of my old letter-books are) stored in the basement of my residence. If

Deposition of Defendant's Witness, Edward Rector, stipulated in from Burroughs case.

you can conveniently produce the originals it will save much trouble.

X-Q. 27. At the time which these letters purport to cover, namely, from October, 1900, to February 27th, 1902, you had under consideration the question of whether or not the American Arithmometer Company was liable as an infringer of the Felt patent No. 628,176, to which these letters refer, and also the Pike patent No. 595,864, under consideration, to which these letters refer, did you not?

Mr. Davis: Same objection.

A. I had under consideration at that time the question of the alleged infringement of the Felt patent by the machines made by the American Arithmometer Company, and those machines were constructed under and in accordance with the Pike patent, so that in that sense I doubtless had both of the matters you speak of under consideration.

X-Q. 28. In the letter of October 26, 1900, from you you say:

> "My client's machine is built under, and I believe in exact accordance with, the Pike patent No. 595,864, of December 21, 1897, the application for which was filed July 9th, 1897, nearly a year prior to the filing of the first Felt application, and nearly two years prior to the filing of the second one. The reasonable presumption would therefore seem to be that Pike was the original and first inventor of the construction employed in my client's machine, and that none of the claims of the Felt patent can be construed to cover such machine without invalidating them. This presumption as to the respective dates of invention is perhaps further strengthened by the fact that the construction shown and described in the Pike patent had been completed and perfected and put into use by the St. Louis Company prior to the filing of the Pike application, the latter having been prepared directly from the machine."

Deposition of Defendant's Witness, Edward Rector, stipulated in from Burroughs case.

Do you remember having sent any such communication as that on or about that date, October 26th, 1900?

Mr. DAVIS: Same objection.

A. The language sounds familiar, and as you read from what purports to be a copy of a letter written by me on the date referred to, I have no doubt the letter was written.

X-Q. 29. At that time, did you look up the date when you prepared this application for Pike?

Mr. DAVIS: Same objection.

A. I have no recollection on the subject, one way or the other, but do not think it likely that I did, since the matter was not very old at that time, and I probably had a distinct recollection of the fact that I prepared the Pike application from a complete machine some time before the application was filed.

X-Q. 30. Did you look up at that time the history of the Felt application for the Felt patent 628,176, in the Patent Office?

Mr. DAVIS: Same objection.

A. 'It does not appear from my letter, from your copy of which you have quoted, that I had done so at that time. I distinctly remember looking up the file of the Felt patent on some occasion after your notice of infringement was given to the American Arithmometer Company, but I have no recollection, off-hand, as to when I did it.

X-Q. 31. On December 28th, in a letter from you to Munday, Evarts & Adcock, you say:

> "I would say that I have not written you further about this matter because Mr. Pike, the inventor of my client's machine, is living in England at present and communication with him is, therefore, quite slow. We have not yet received from him all the data we desire about the early history of his invention, although we are fairly satisfied, from what we have received, that his invention ante-dated that of Mr.

Felt, and that the latter's claims therefore cannot be sustained to cover Mr. Pike's device."

Deposition of Defendant's Witness, Edward Rector, stipulated in from Burroughs case.

At that time had you examined the contents of the file-wrapper of Mr. Felt's application for his patent No. 628,176?

Mr. Davis: Same objection.

A. I do not know whether I had or not, in the absence of any record data upon the subject. The statements of my letter may have had reference to some knowledge acquired from an examination of the file of Felt's application, or they may have been based on the statements of some of your letters to me. Thus, in the copy which you have produced of what purports to have been a letter written by your firm to me on November 1, 1900, you say:

"Mr. Felt's invention ante-dates Pike's by a considerable period, and his reduction to practice also ante-dates Pike's reduction to practice."

I note that in what purports to be my reply to that letter, dated November 3, 1900, I said:

"You speak with assurance respecting the relative dates of Felt's and Pike's inventions—apparently having much more intimate knowledge of the latter than I have."

X-Q. 32. At some time you examined the file-wrapper and contents of Felt's application for his patent No. 628,176, in the Patent Office, did you not, and procured copies of Mr. Felt's affidavits, which carried the date of his invention back of the filing date of Pike patent and the Hiett patent applications?

Mr. Davis: Same objection.

A. I never examined the file of Felt's application in the Patent Office at any time, but I distinctly remember having procured a copy of it, or of portions of it, including the affidavits you mention; and I remember that those affidavits alleged that Felt had made the invention

Deposition of Defendant's Witness, Edward Rector, stipulated in from Burroughs case.

"months" before the date of application for the Hiett patent, which was September 16, 1896. That was the only knowledge I ever had, at any time, of the alleged or claimed date of Felt's invention, prior to seeing a deposition which Mr. Felt gave in the suit against the Universal Company.

X-Q. 33. You had this knowledge of the contents of the affidavits in Mr. Felt's file-wrapper of his application for his patent No. 628,176, prior to the time when the American Arithmometer Company entered into the license contract with the Comptograph Company, and subsequent to the time when you prepared the Pike application for his patent 595,864, in the spring of 1897?

Mr. Davis: Same objection.

A. Yes.

X-Q. 34. At this time, when you were considering the contents of the Felt file-wrapper at some time prior to January 20th, 1904, which is the date of the license agreement, and subsequently to the spring of 1897, did you go through the files of the Pike application and examine that file?

Mr. Davis: Same objection.

A. I have no recollection of having done so, and do not know of any reason why I would have been likely to do so.

X-Q. 35. Did you, prior to the date of the license agreement, make any inquiries or examination to ascertain what the date of Pike's invention of the subject-matter of this patent was?

Mr. Davis: Same objection.

A. I am satisfied that I did not do so in connection with the negotiation of that license, or at any time near the date of the license; but my recollection is, and I see some reference to the fact in the copies of letters which you have produced, that at the time you notified the

Deposition of Defendant's Witness, Edward Rector, stipulated in from Burroughs case.

American Arithmometer Company of its alleged infringement of the Felt patent, in the year 1900, I made some effort to ascertain the date of Pike's invention.

X-Q. 36. What did you find out about the date of his invention?

Mr. Davis: Same objection.

A. Nothing very definite. Mr. Pike, as I believe is stated in one of the letters, was living in England at the time. I had no personal acquaintance with him, and had never seen him. I requested the company to communicate with Mr. Pike and ascertain what it could from him about the date of his invention. My recollection is that his reply was rather indefinite, because of the fact that he had no data relating to his invention with him in England. I do remember that he claimed to have made the invention some time during the year 1896. I intended to follow the matter up with Mr. Pike personally when he returned to this country, but he did not return for a year or more after the date of the notice of infringement, and when he did return he immediately became associated with interests hostile to the American Arithmometer Company, and has ever since remained associated with those interests. I never saw Mr. Pike, or had any communication with him, until the summer of 1906, and then met him only casually when he came to my office with counsel for the Pike Adding Machine Company to attend some testimony in a suit which the Burroughs Company then had pending with Mr. Pike's Company.

X-Q. 37. Where was Mr. Pike when the Pike machine or machines were sent to your office in the spring of 1897?

Mr. Davis: Same objection.

A. He was then in the employ of the American Arithmometer Company, of St. Louis.

X-Q. 38. Did you make inquiry of the American

Deposition of Defendant's Witness, Edward Rector, stipulated in from Burroughs case.

Arithmometer Company at that time as to the date of Mr. Pike's invention?

Mr. DAVIS: Same objection.

A. None whatever. There was no occasion for doing so.

X-Q. 39. Did you at any time make such inquiry of the American Arithmometer Company, or its successor, the Burroughs Company?

Mr. DAVIS: Same objection.

A. Yes, as I have before stated, I did request that company to ascertain, if it could, from Mr. Pike the date of his invention, with the result which I have explained.

X-Q. 40. Where did Mr. Pike make this machine, or these two first machines; was it in the shops of the American Arithmometer Company of St. Louis?

Mr. DAVIS: Same objection.

A. I so understand, although I have no personal knowledge on the subject.

Adjourned until Monday, May 4th, 1908, at 10 o'clock A. M.

CHICAGO, May 4th, 1908.

Met pursuant to adjournment. Present as before.

X-Q. 41. What information did you have at the time you negotiated the license between the Comptograph Company and your client under the Felt patent, as to the date when Mr. Pike made the invention of this patent No. 595,864, and the application, the file of which you state has become lost?

By Mr. DAVIS: Objected to as immaterial and not germane to the direct examination of the witness.

A. None whatever, except the very indefinite information of which I have before spoken, obtained at about the time you notified the American Arithmometer Company

Deposition of Defendant's Witness, Edward Rector, stipulated in from Burroughs case.

of its alleged infringement of the Felt patent in the year 1900.

X-Q. 42. And the only information you had at the time of the negotiations for this license as to the date of the invention of Mr. Felt's patent No. 628,176 is what you obtained from his affidavits filed in the Patent Office setting forth that his invention was made "months" prior to the filing of the application for the Hiett patent, dated September 16th, 1896; is that right?

Same objection.

A. That is my recollection.

X-Q. 43. And with this amount of information in your possession, you advised your client, the American Arithmometer Company, to pay to the Comptograph Company in the neighborhood of $10,000, $5,000 of which was to be in cash; is that so?

Same objection.

A. I advised that company to make the contract with the Comptograph Company that was made, or, at least, it was made with my acquiescence, and that contract called for the payment you speak of.

X-Q. 44. At the same time you didn't believe that the Felt patent was a valid patent, did you?

Same objection.

A. I had very grave doubts of it.

X-Q. 45. When you prepared the application for the patent to Pike, of which you say you have lost the file, did you have grave doubts about the patentability of the subject-matter, for instance, of claim 1 of the Pike patent?

Same objection.

A. I do not recall what I thought about it, since it is the usual practice in preparing applications for patents to draw claims as broadly as it is thought the Patent

Deposition of Defendant's Witness, Edward Rector, stipulated in from Burroughs case.

Office will allow, and I presume I followed that practice in the case of the Pike application.

X-Q. 46. How many times have you looked for that lost file of the Pike application?

A. Several times, I do not recall just how many, as I looked for it on several different occasions at dates quite remote from each other.

X-Q. 47. When did you first look for it?

A. I cannot say, definitely, but I recall having looked for it at various times, and I think the first one was a year or more ago.

X-Q. 48. What did you do with the incorrect drawings of the Pike machine, and which you think were in the form of Patent Office drawings of that machine?

A. As I have before stated, I do not know what became of them. I did not expect to find them in my file of the Pike application, however, because my office files of patent applications of that period were enclosed in comparatively small envelopes or jackets, open at one end, and these drawings, as I recall them, were on cardboard such as used for Patent Office drawings; and as there were probably four or five sheets of them, I do not suppose they were ever folded up and put in the file.

X-Q. 49. Did these drawings on the back of them have a Patent Office stamp, showing that they had been at one time filed in the Patent Office?

A. I think not. I do not recall having seen anything of that kind on them.

X-Q. 50. Before you filed the application for the Pike patent an application for a patent for the same subject-matter, and at the instance of the American Arithmometer Company, had already been filed, had it not?

A. I do not believe I ever knew or heard of any such application. At any rate, your statement of it now comes to me as an entirely new suggestion.

Deposition of Defendant's Witness, Edward Rector, stipulated in from Burroughs case.

X-Q. 51. Did Mr. J. H. Wyeth bring in the machine to your office and explain it to you as indicated in the letter No. 1, dated April 5, 1897?

A. Yes, I think he did. At any rate, the machine was brought to my office and left there while the application was being prepared.

X-Q. 52. Somebody explained it to you, did they not?

A. Undoubtedly.

X-Q. 53. I have here the original of the letters from you to Messrs. Munday, Evarts & Adcock, to which I referred the other day in connection with copies of them, and at which time you thought you would prefer to see the originals.

A. I identify the letters you hand me as original letters written by me on the dates which they respectively bear, to-wit, October 20 and 26, 1900; November 3, 1900; December 28, 1900; October 7, 1901; January 10, 1902; February 19, 1902, and February 27, 1902.

Mr. MUNDAY: The correspondence, beginning with a letter from Munday, Evarts & Adcock to the American Arithmometer Company, and consisting of letters marked A, B, C, D, E, F, G, H, I, K, L, M, N, is here offered in evidence on behalf of the Comptograph Company. The letters here follow, the originals being withdrawn by consent.

By Mr. DAVIS: The introduction in evidence of the letters in question and the copying of them into the record is objected to on the ground that they are irrelevant and immaterial, and not germane to the direct examination of the witness. No objection, however, is made to the withdrawal of the original letters.

Deposition of Defendant's Witness, Edward Rector, stipulated in from Burroughs case.

A.

"MUNDAY, EVARTS & ADCOCK,
Patent Law,
Suite 906 Marquette Bldg.,
Chicago, Ill.

October 18th, 1900.

AMERICAN ARITHMOMETER COMPANY,
2102 Wash Street—St. Louis, Mo.

Gentlemen:—

On behalf of our client, the Felt & Tarrant Mfg. Co. of this City, we beg to call your attention to patent No. 628,176, granted to Mr. Felt, of that Company, on July 4, 1899.

This patent covers all tabulating machines in which the printing mechanism is adapted to print two or more characters side by side, and has a carriage movable laterally for column spacing, devices for feeding the paper longitudinally, and automatic mechanism acting in any position of the carriage, to actuate the paper feed devices in line spacing movements.

This statement of the scope of the patent which we believe to be fully within the terms of claim 1 covers machines which you are now and have been selling for some time past.

This patent also covers broadly in claim 15 the use of means for returning the paper after printing a column so as again to present its starting point at the printing center. This is a feature which our client is informed you have also embodied in some of your machines.

It is quite probable you have infringed other claims in this patent. The patent is valued highly by our client as its leading features are necessary in any successful wide paper tabulating machine, and they are determined to protect their rights in it. We therefore notify you to desist from further manufacture of machines embodying the claims of this patent.

In Patent No. 644,287, the Felt & Tarrant Company have further claims upon the means for returning the paper to its starting position after the completion of a column which you will do well to avoid.

Kindly advise us promptly in regard to this matter.

Yours very truly,
MUNDAY, EVARTS & ADCOCK."

Deposition of Defendant's Witness, Edward Rector, stipulated in from Burroughs case.

B.

"Law Offices of
EDWARD RECTOR,
1060 Monadnock Bldg.,
Chicago.

PATENTS AND PATENT CAUSES.
Telephone, 821 Harrison.

CHICAGO, October 20, 1900.

MESSRS. MUNDAY, EVARTS & ADCOCK,
Chicago, Illinois.

Gentlemen:

As counsel for the American Arithmometer Company, of St. Louis, your letter of the 18th inst. to that Company on behalf of the Felt & Tarrant Mfg. Co. of Chicago, has been referred to me for consideration and reply. I do not know anything about the patents you mention, and was not aware that there was any claims or question of infringement of them by my client's machine. I will take the matter up at once and advise you for my conclusion and my client's determination in the premises as soon as my examination is completed.

In the meantime it occurs to me to say to you that some years ago I examined the Felt & Tarrant 'Comptograph' and rendered the St. Louis Company an opinion concerning it. At that time, and I believe upon one or two occasions since, I suggested to some of the officers of the Company that it might be well to inquire if Felt & Tarrant would be willing to sell out the 'Comptograph' branch of their business at a reasonable figure. I was led to make this suggestion by reason of information given me to the effect that the Comptograph seemed to be sort of a side issue of your client's business, which was not being vigorously pushed or developed, and from which it was assumed they were not deriving any considerable profit, my information being that their attention was devoted chiefly to their Comptometer, which was thought to constitute the major portion of their business.

My clients never appeared to take any interest in the matter, and never authorized me to communicate with your clients upon the subject, and hence nothing was said or done. If it now be a fact that their machine infringes some recently granted patents of your clients, or if there is reasonable ground for any question of such infringement, they may be induced to take some interest in the suggestion which I have heretofore made them. I

Deposition of Defendant's Witness, Edward Rector, stipulated in from Burroughs case.

would therefore inquire whether your clients would consider a proposition for a purchase of the Comptograph branch of their business, including the patents relating to that machine, and perhaps such appliances as they may have for its manufacture. If you will be kind enough to communicate with them on the subject and then advise me I will take the matter up with my clients if your report warrants it.

Yours very truly,

EDWARD RECTOR."

C.

"Law Offices of
EDWARD RECTOR,
1060 Monadnock Bldg.,
Chicago.

PATENTS AND PATENT CAUSES.
Telephone, 821 Harrison.

CHICAGO, October 26, 1900.

MESSRS. MUNDAY, EVARTS & ADCOCK,
Chicago, Illinois.

Gentlemen:

Replying further to your letter of the 18th inst. to the American Arithmometer Company on behalf of the Felt & Tarrant Manufacturing Company, I would say that I have obtained the copies of the Felt patents Nos. 628,176 and 644,287, to which you call attention. The application for the former of these two patents appears to have been filed on May 31, 1898, and the application for the later one on July 13, 1899. My client's machine is built under, and I believe in exact accordance with, the Pike patent No. 595,864, of December 21, 1897, the application for which was filed July 9, 1897, nearly a year prior to the filing of the first Felt application, and more than two years prior to the filing of the second one. The reasonable presumption would therefore seem to be that Pike was the original and first inventor of the construction employed in my client's machine, and that none of the claims of the Felt patents can be construed to cover such machine without invalidating them. This presumption as to the respective dates of invention is perhaps further strengthened by the fact that the construction shown and described in the Pike patent had been completed and perfected and put into use by the St. Louis company prior to the filing of the Pike application, the latter having been prepared directly from a machine.

Deposition of Defendant's Witness, Edward Rector, stipulated in from Burroughs case.

Thinking perhaps you were not advised of the foregoing, and had simply compared one of my client's machines with the Felt patents, without knowledge of the Pike patent, I deem it best to call it to your attention and hear what you have to say before proceeding with any further examination respecting the scope and validity of the Felt patents. I also call your attention to the claims of the Pike patent some of which would appears to be infringed by the Felt & Tarrant machine if the latter is being constructed in accordance with the Felt patents.

Yours very truly,

EDWARD RECTOR."

D.

"MUNDAY, EVARTS & ADCOCK,
Patent Law,
Suite 906 Marquette Bldg.,
Chicago, Ill.

Nov. 1, 1900.

MR. EDWARD RECTOR,
1060 Monadnock Blk., City.

Dear Sir:—

Your favors of the 20th and 26th ult., relative to the matter of infringement by the American Arithmometer Co., upon the patents of the Felt & Tarrant Mfg. Co., were duly received.

The Felt & Tarrant Co. will dispose of the Comptograph branch of their business if a price satisfactory to them is offered. About a year ago they were requested to name a price on both the Comptometer and Comptograph, by parties who they had reason to believe made the request on behalf of the American Arithmometer Co., or on behalf of persons interested in that Company. They named at that time a price of $800,000.00. Since that offer was made, the Felt & Tarrant Co., have expended much time and money developing the Comptograph and tabulator and in perfecting their equipment and organization for turning out those machines. They have completed the parts for several hundred Comptographs and one hundred or more tabulators, and now have a thoroughly trained force of assemblers and adjusters at work setting them up. Their investment, therefore in this branch of their business, is much larger than it was when the offer above mentioned was made.

Deposition of Defendant's Witness, Edward Rector, stipulated in from Burroughs case.

Under all the circumstances, our clients think your clients should first name the price which they are willing to give, and they are ready to consider any reasonable offer that may be made.

With reference to the matters mentioned in your second letter, we would say that we are fully advised of the Pike Patent before application for Felt Patent, No. 628,-176, was prepared. The fact is, however, that Pike's precedence in the Patent Office does not make him the pioneer inventor. On the contrary, Mr. Felt's invention antedates Pike's by a considerable period, and his reduction to practice also antedates Pike's reduction to practice. If there is any conflict between the inventors, Felt's claim will be found to be paramount.

We note, also, what you say as to the Felt machine being an infringement on the Pike Patent. We investigated this matter sometime ago and advised Mr. Felt that his machine did not infringe, and we think you will so find when you look into the matter closely; and we came to this conclusion without attaching any weight to the fact that Felt's invention antedates Pike's. Pike narrowly missed getting some claims which would cover the Felt machine, but a miss is as good as a mile in such matter, you know.

If your people are disposed to buy, we hope they will decide at once what they will pay and let us know about it promptly.

Yours very truly,
MUNDAY, EVARTS & ADCOCK."

E.

"Law Offices of
EDWARD RECTOR,
1060 Monadnock Bldg.,
Chicago.

PATENTS AND PATENT CAUSES.
Telephone, 821 Harrison.

Nov. 3, 1900.

MESSRS. MUNDAY, EVARTS & ADCOCK,
Marquette Bldg., City.

Gentlemen:—

I have your favor of the 1st inst. regarding the Felt and Tarrant matter, and will forward it to my client. Unless, however, there has been a typographical error in the figures mentioned in your letter, I think any purchase of your client's business, or even negotiations upon

Deposition of Defendant's Witness, Edward Rector, stipulated in from Burroughs case.

any such basis, are out of the question, unless possibly, the price they place upon their Comptograph constitutes but a very small portion of the aggregate amount named.

Your statement that your clients have been previously approached by parties believed to represent the American Arithmometer Company is the first knowledge or intimation I have had of anything of the kind, and I am inclined to doubt whether they had any connection, direct or indirect, with the St. Louis company.

You speak with assurance respecting the relative dates of Felt's and Pike's inventions—apparently having much more intimate knowledge of the latter than I have. While at a loss to know how you or your clients acquired such accurate information, I will not attempt to discuss the question until I have investigated the matter so far as our side of it is concerned.

Yours very truly,

EDWARD RECTOR."

F.

"Law Offices of
EDWARD RECTOR,
1060 Monadnock Bldg.,
Chicago.

PATENTS AND PATENT CAUSES.
Telephone, 821 Harrison.

CHICAGO, December 28, 1900.

MESSRS. MUNDAY, EVARTS & ADCOCK,
Marquette Bldg., Chicago.

Gentlemen:

Replying to your favor of the 27th inst. respecting alleged infringement of the Felt & Tarrant patents by the American Arithmometer Company, I would say that I have not written you further about this matter because Mr. Pike, the inventor of my client's machine, is living in England at present and communication with him is therefore quite slow. We have not yet received from him all the data we desire about the early history of his invention, although we are fairly satisfied, from what we have received, that his invention ante-dated that of Mr. Felt, and that the latter's claim therefore cannot be sustained to cover Mr. Pike's device. While it is possible, it is not at all probable that we shall ultimately reach any different conclusion, so that if your clients are anxious for litigation, and prefer not to wait for more definite advices, they can begin suit whenever they like.

Yours very truly,

EDWARD RECTOR."

Deposition of Defendant's Witness, Edward Rector, stipulated in from Burroughs case.

G.

"MUNDAY, EVARTS & ADCOCK,
Patent Law,
Suite 906 Marquette Bldg.,
Chicago, Ill.

January 8, 1901.

EDWARD RECTOR, ESQ.,
Atty. at Law, 1060 Monadnock Bldg., City.

Dear Sir:—

We have received your favor of the 28th ult. relative to the Felt & Tarrant vs. American Arithmometer Co. matter.

Our clients are not anxious for litigation and we do not wish to press you unduly. You may, therefore, take such additional time to complete your investigation as may be reasonable.

Of course we cannot and do not agree that the public shall not be cautioned in the meantime as to the risks they run in buying the Arithmometer Co's machines.

In your further consideration of the matter, we suggest that you examine the Hiett patent No. 580,683, showing a wide paper machine. This patent would seem to be early enough to have a limiting effect on Pike's claims, but it is not early enough to have any effect on Felt's claims.

In reference to your intimation that the Felt & Tarrant machine may infringe Pike, we hope before you make up your mind that you will examine Felt & Tarrant's machine instead of relying upon a comparison of the Felt & Pike patents. The machines as marketed depart in some details from the construction shown in Felt's patents.

Yours truly,
MUNDAY, EVARTS & ADCOCK.

Dictated by
Mr. Evarts

H.

Deposition of Defendant's Witness, Edward Rector, stipulated in from Burroughs case.

"MUNDAY, EVARTS & ADCOCK,
Patent Law,
Suite 906 Marquette Bldg.,
Chicago, Ill.

CHICAGO, ILL., Oct. 4th, 1901.

EDWARD RECTOR, ESQ.,
1060 Monadnock Bldg., City.

Dear Sir:

We beg to call your attention again to the claim of infringement of the Felt & Tarrant Co. *vs.* the American Arithmometer Co. You wrote us Dec. 28th, 1900, that you were not then in possession of all the information you desired about the early history of the Pike invention, Mr. Pike being then in England, so that communication with him was quite slow. And in reply to this we told you to take a reasonable time to complete your investigation. Since then we have heard nothing from you. Our client feels that it has now waited long enough certainly to show that it is not anxious for litigation, and so long we fear that your client may have received the impression that we did not believe in the claim ourselves. We should be pleased if you will let us know the result of your investigations, which certainly ought to be finished by this time. And we will wait upon you for a week or ten days to give you an opportunity to arrange the matter, if you are so minded.

Yours very truly,
MUNDAY, EVARTS & ADCOCK.

I.

"EDWARD RECTOR SAMUEL E. HIBBEN.
Telephone 821 Harrison.
Law Offices of
RECTOR & HIBBEN,
1060 Monadnock Bldg.,
Chicago.

MESSRS. MUNDAY, EVARTS & ADCOCK,
Chicago, Ill.

Oct. 7th, 1901.

Gentlemen:

Replying to your favor of the 4th inst. concerning the Felt & Tarrant patents, I understand that Mr. Pike is to

Deposition of Defendant's Witness, Edward Rector, stipulated in from Burroughs case.

return to this country this month, to remain here. I will endeavor to see him as soon after his arrival as possible and secure the information we desire. I have been unable to get it in definite and satisfactory form by correspondence.

Yours very truly,
(Signed) EDWARD RECTOR."

K.

"MUNDAY, EVARTS & ADCOCK,
Patent Law,
Suite 906 Marquette Bldg.,
Chicago, Ill.
EDWARD RECTOR, ESQ.,
Atty. at Law, 1060 Monadnock Bldg.
City.
Dear Sir:

CHICAGO, ILLS., January 9, 1902.

You wrote us on October 7th last in reference to the Felt & Tarrant matter that Mr. Pike was to return to this country during that month, and that you would see him and secure the information you desired. We have been waiting patiently ever since to hear from you. Our clients have had a good supply of patience, but it is being exhausted by these delays. In the meantime your clients are reaping a large harvest from inventions which belong to our clients.

We trust that we may hear from you immediately on receipt of this.

Yours very truly,
(Signed) MUNDAY, EVARTS & ADCOCK."

"Jan. 10th, 1902.

MUNDAY, EVARTS & ADCOCK,
Marquette Bldg., City.
Gentlemen:

Replying to your favor of yesterday, Mr. Pike has returned to this country, and I understand is now in St. Louis. I expect to go down there next week, and will endeavor to see him.

Yours very truly,
(Signed) EDWARD RECTOR."

Deposition of Defendant's Witness, Edward Rector, stipulated in from Burroughs case.

L.

"MUNDAY, EVARTS & ADCOCK,
Patent Law,
Suite 906 Marquette Bldg.,
Chicago, Ill.

CHICAGO, ILL., Feb. 18, 1902.

MR. EDWARD RECTOR,
City.

Dear Sir:—

It is sometime since we heard from you relative to the Felt & Tarrant Mfg. Co.'s claim against the American Arithmometer Company. We have been instructed to prepare a bill against your client and are now engaged upon it. If you have anything to say, now is your opportunity.

Yours very truly,

M. E. & A."

M.

Feb. 19th, 1902.

"MUNDAY, EVARTS & ADCOCK,
Marquette Bldg.,
City.

Gentlemen:

Your letter of the 18th inst. regarding the Felt and Tarrant matter and addressed to our Mr. Rector has been opened by us. We have to say that Mr. Rector is at present in the East and is expected to return to the office next Tuesday when your letter will be called to his attention.

Yours very truly,

RECTOR & HIBBEN."

N.

"Feb. 27th, 1902.

MESSRS. MUNDAY, EVARTS & ADCOCK,
Chicago, Ill.

Gentlemen:

Replying to your favor of the 18th inst. which was received during my absence, I would say that such investigation as I have been able to make satisfies me that Mr. Pike's invention was, in fact, of earlier date that Mr. Felt's, as indicated by their respective dates of applications and patents. Aside from this defense, how-

Deposition of Defendant's Witness, Edward Rector, stipulated in from Burroughs case.

ever, I do not think any of Mr. Felt's claims can be sustained and at the same time construed to cover Mr. Pike's construction. I can therefore only say that if your clients insist upon beginning what I am convinced is an unwarranted litigation we shall defend ourselves to the best of our ability and endeavor to make them regret that they struck the first blow.

Yours very truly,

EDWARD RECTOR.

Copy."

X-Q. 54. On page 19 of the brief filed by you on behalf of the Burroughs Company before the Court of Appeals in the suit against the Universal Company, you say:

> "I personally prepared the Pike application, in the spring of 1897, from a complete and perfectly operative machine; and others were made during that year and some of them sold and put into practical use."

Do you believe that is true?

A. Yes, I have no doubt of it.

X-Q. 55. Did you believe it to be true when your client, the American Arithmometer Company, entered into the license contract, with your acquiescence and under your advice?

A. I knew the first statement which you have quoted from the brief to be true, at that time, but I do not remember what information I had at that time as to the second statement.

X-Q. 56. Did you know or believe these two statements to be true at the time when the hearing was had before his Honor, Judge Kohlsaat, in the Circuit Court, in the case of Comptograph Company against the Universal Company?

A. I of course knew the first one of those statements to be true at that time, because it was within my personal knowledge. I do not remember what information I had on the other point at that time.

Deposition of Defendant's Witness, Edward Rector, stipulated in from Burroughs case.

X-Q. 57. Do you remember the fact that his Honor, Judge Kohlsaat, decided that case in favor of the complainant and held that the Felt patent No. 628,176 was a good and valid patent?

A. Yes.

X-Q. 58. Did you think that a just and righteous decision at the time it was rendered?

A. I do not know that I had any opinion as to the justness or righteousness of the decision one way or the other.

X-Q. 59. Did you think it was a just and righteous decision at the time when you filed the brief in behalf of the Burroughs Company, from which I quoted?

By Mr. Davis: Objected to as irrelevant and immaterial, and as not germane to the direct examination of the witness.

A. I do not recall having any opinion as to the justness and righteousness of that decision.

X-Q. 60. I want to find out what your views of that decision were. I used the words "just" and "righteous" because I felt that that would be a good, broad way of putting it. Did you have any opinion whatever about Judge Kohlsaat's decision at the time it was rendered, and respecting whether it ought to have been rendered one way or another?

Same objection.

A. I was of the opinion that some of the defenses to the patent had not been adequately presented to Judge Kohlsaat, and I thought that if those defenses were properly presented it was doubtful whether the patent ought to be or would be sustained.

X-Q. 61. And with this view in mind that the patent was of doubtful validity, you advised Mr. Wyeth that the decision ought to be published widely, did you?

Same objection.

Deposition of Defendant's Witness, Edward Rector, stipulated in from Burroughs case.

A. I do not recall having given any advice one way or another on that subject. I remember telling Mr. Wyeth that the Burroughs Company desired to publish the opinion, and, as I recall the matter, that it was thought his company ought to join with it in doing so, and share the expense.

X-Q. 62. And you were at that time a director of the Burroughs Company as well as its counsel?

Same objection.

A. Yes, both.

X-Q. 63. Did you act as counsel for the Burroughs Company or as director when you made this suggestion to Mr. Wyeth?

Same objection.

A. That would be hard to say; but in either event, I was certainly the representative of the Burroughs Company.

X-Q. 64. And when you thought that the Felt patent was of doubtful validity, was that the opinion of counsel or of a director of the Burroughs Company?

Same objection.

A. It was my opinion, and I was both counsel for and a director of the Burroughs Company. I had always had grave doubts of the validity of the Felt patent, and they were not entirely removed by Judge Kohlsaat's decision.

X-Q. 65. You were present at the argument of the case before Judge Kohlsaat, I mean the case against the Universal Company, from the decision of which case by Judge Kohlsaat the Universal Company appealed, were you not?

Same objection.

A. Yes.

X-Q. 66. Were you on our side or against us?

Same objection.

Deposition of Defendant's Witness, Edward Rector, stipulated in from Burroughs case.

A. Neither.

X-Q. 67. Why did you come there?

A. To listen to the argument.

X-Q. 68. Why did you file a brief in the Court of Appeals on behalf of the Burroughs Company?

A. For the reasons stated in the brief.

X-Q. 69. At the time you filed that brief you had in your possession a printed copy of all of the evidence in the case and of all the pleadings in the case, the latter being printed at pages 1 to 34 of complainant's printed record. Is that correct?

A. Yes, I had a copy of the complete record, and the brief made repeated references to it.

X-Q. 70. Then at the time you filed this brief of yours on behalf of the Burroughs Company you knew that the Universal Company in a sworn amendment to its answer had averred the following:

> "The said Dorr E. Felt, patentee of said letters patent No. 628,176, made a machine embodying the alleged improvement or improvements set forth in claims 1, 2 and 4 of said patent, which machine was completed and capable of useful operation in the month of January, 1890."

A. Presumably I did, from having possession of a complete copy of the record; but I do not remember whether I had ever read that part of the record or not. The portion of the record in which I was particularly interested, and to which my brief was almost entirely devoted, was the deposition of Mr. Felt.

X-Q. 71. On page 14 of your brief you say:

> "In my judgment, the questions of actual abandonment, and of equitable estoppel against Felt by reason of his long delay and the intervening rights of others, present much more serious defenses to the Felt patent than do the questions of two years' public use or sale."

Now when you wrote this brief you knew, did you not,

Deposition of Defendant's Witness, Edward Rector, stipulated in from Burroughs case.

that the defendant was contending that there had been a two years' public use or sale of the Felt invention?

A. I would of course be presumed to know the contents of the Record whether I actually did or not; and I believe I had copies of all the briefs which had been filed up to that time, so that I presumably knew what contentions were made by the respective parties upon record.

X-Q. 72. You knew, did you not, as a lawyer, that the Universal Company, defendant, would not be permitted to advance as a defense that the 1890 machine was an impracticable machine and also advance the contradictory defense that that machine had been in public use as a complete and practical machine for more than two years prior to his application for a patent on it? You also knew as a lawyer that the defendant could not contend that the 1890 machine had been concealed and at the same time contend that it had been in public use and on sale and described in a printed publication?

A. I was not concerned with the matters you inquire about, and did not assume to discuss them in the brief which I filed.

X-Q. 73. But isn't it a fact that, representing a licensee under a patent, you did come into court against the protest of the owner of the patent?

A. What I did is a matter of record in this case, and there is no dispute or question about it.

X-Q. 74. Did you come into court against the protest of the owner of the patent?

A. Yes.

X-Q. 75. And, coming into court against the protest of the owner of the patent, you did entreat the Court of Appeals to entertain a defense which was contrary to and contradictory of the defenses made in the pleadings by the defendant.

Deposition of Defendant's Witness, Edward Rector, stipulated in from Burroughs case.

A. I did exactly what appears in my brief in the Court of Appeals—nothing more and nothing less.

X-Q. 76. No, Mr. Rector, it doesn't appear in your brief that the defenses which you present there are inconsistent with and contradictory of the defenses made in the pleadings by the defendant itself. And I should like to have you answer the question. I mean my last question.

A. The court had the record before it, including the pleadings to which you refer; and could see for itself whether the brief was inconsistent with them.

X-Q. 77. You knew that the counsel for the Comptograph Company would be very greatly embarrassed by the brief that you filed, did you not?

A. I knew that counsel for the Comptograph Company were very much opposed to my filing any brief in the cause, having so stated both to the court and to me personally; but the brief was not filed for the embarrassment of counsel.

X-Q. 78. You knew, did you not, that the amendment to the answer setting up the defense that the 1890 machine of Felt was a complete and operative machine and that it was on public sale and in public use and had been described in a printed publication, was made as an amendment to the pleadings after all of the testimony had been taken?

A. Having had a copy of the printed record in my possession at the time, I of course cannot disclaim knowledge of its contents, and do not desire to do so; but I do not at present recall that I had any actual knowledge respecting the filing of the amended answer at the time you speak of. It may be that I had, and there may possibly be some reference to it in my brief; but I do not now remember.

X-Q. 79. Please look at your printed record and see

Deposition of Defendant's Witness, Edward Rector, stipulated in from Burroughs case.

whether the amended answer was filed before or after the testimony was taken.

A. The amended answer, which appears at pages 24 to 28 of the Court of Appeals record, bears date December 10, 1904; I do not find the actual date of its filing. What seems to be the last testimony taken in the case is the deposition of Charles L. Klein, at pages 508 and 9; and from the dates appearing on pages 506 and 7, it would appear that this deposition was taken on December 1, 1904.

X-Q. 80. What sense would there have been in taking testimony in that case to show that Mr. Felt, in his 1890 machine, had produced a machine capable of useful operation after that amendment to the answer had been filed, in which the allegation was made that this very machine embodied the invention and was "completed and capable of useful operation"? Would it have been necessary to do it in order to establish the facts?

A. I cannot undertake to discuss with counsel on this record the reasons, pro and con, for any course which counsel took or failed to take in the case referred to.

X-Q. 81. You misapprehend my question. I want to find out if you knew at the time that you filed this brief that the question whether or not the 1890 machine was complete and capable of useful operation was not an open question so far as the defendant in that case was concerned. Because in your brief you comment unfavorably upon the sufficiency of the evidence, did you know that the defendant had admitted in the most solemn manner in that case that the 1890 machine was complete and capable of useful operation?

A. As I have already stated, I presumably knew whatever there was in the record, including the defendant's amended answer. As I have also stated, I do not know whether I actually knew it or not; but that is perhaps immaterial.

Deposition of Defendant's Witness, Edward Rector, stipulated in from Burroughs case.

X-Q. 82. When you made the argument in your brief that Felt had concealed the invention you knew, did you not, that the defendant in that case had averred in its answer that Mr. Felt had put the invention into public use, which was utterly inconsistent with the theory of concealment?

A. My last answer applies to this question as well as to the preceding one.

X-Q. 83. At the time you made the argument in your brief that Felt had concealed the invention you knew, did you not, that the defendant in that case had averred in the most solemn manner in an amended answer that the invention had been described by Mr. Felt in a printed publication, and also that it had been put on sale by Mr. Felt?

A. Same answer.

X-Q. 84. Did you think you had a right to make any other or different defenses on behalf of the Burroughs Company than the defendant was permitted to make in that litigation?

A. I believe the pleadings in the Universal case raised the issue of abandonment, to which my brief was entirely devoted.

X-Q. 85. For a licensee to come into a case in which the licensee is not a defendant and entreat the court to hold the patent void for reasons not justified by pleadings in the case would be rather too strong, even for the Burroughs Company, would it not, Mr. Rector?

A. I think you will have to reserve your arguments for the court.

X-Q. 86. I ask you whether you think the Burroughs Company would be justified in entreating the court to hold the patent void for reasons not consistent with the pleadings in the case?

A. I have already stated that I believe the brief which I filed was consistent with the issues raised by the plead-

Deposition of Defendant's Witness, Edward Rector, stipulated in from Burroughs case.

ings in the case; and I am certain that I think the Burroughs Company was justified in filing or causing the brief to be filed.

X-Q. 87. This brief that was filed by you on behalf of the Burroughs Company is hostile to the Felt patent No. 628,176, is it not?

A. The brief speaks for itself. It certainly discusses at length one of the defenses to the Felt patent, and in that sense I suppose would be considered hostile to the patent.

X-Q. 88. The whole effect of the brief is to entreat the Court of Appeals to hold the Felt patent No. 628,176 to be invalid?

A. Again I must let the brief speak for itself.

X-Q. 89. You wrote the brief didn't you?

A. Yes.

X-Q. 90. Did you ask C. C. Linthicum to father this brief or to file a brief *amicus curiae* in this case?

A. No. I had some conversation with Mr. Linthicum about this case on one occasion, but my recollection is that it was before Judge Kohlsaat's decision. At any rate, I am sure it was not in connection with or at the time of the filing of my brief in the Court of Appeals.

X-Q. 91. Did you try to get any other lawyer to file this brief for you, so that the name of the Burroughs Company would be kept out of it?

A. No, neither Mr. Linthicum or anyone else. On the contrary, I applied to the Court of Appeals on behalf of the Burroughs Company for leave to file the brief before it was prepared, and stated the facts and situation which made the Burroughs Company desirous of having the brief filed.

X-Q. 92. One of these facts which made the Burroughs Company desirous of filing this brief was the circumstance that when the patent should become established the Burroughs Company might have to pay in royalty

Deposition of Defendant's Witness, Edward Rector, stipulated in from Burroughs case.

more than a hundred thousand dollars the first year. Is that correct?

A. Yes, that fact is stated in the brief which I filed in the Court of Appeals.

X-Q. 93. Was there any other reason? If so, please state it.

A. I think that was the principal, if not the only reason, as is fully stated on page 6 of the brief which I filed in the Court of Appeals.

X-Q. 94. If the patent was not sustained by the court so as to give a monopoly to the Comptograph Company and the Burroughs Company, you were not, as you understand it, obliged to pay anything more, were you?

A. No.

X-Q. 95. But if it was sustained in the courts you would still have the Comptograph Company in the field as a competitor so that the business would not amount to a monopoly in any case, so far as the Burroughs Company is concerned. Is that right?

A. Yes.

X-Q. 96. Did you at the time you were negotiating this license contract ask Mr. Wyeth of the Comptograph Company, or anybody belonging to that concern, or Mr. Felt or anybody belonging to Felt & Tarrant, or the counsel for the Comptograph Company or anybody who had even been interested in the ownership of the Felt patent, to give you any statement of the Felt invention, or any of the facts concerning the history of that invention?

A. I did not make any such inquiries of anyone excepting Mr. Wyeth, I am sure, because I had no acquaintance with Mr. Felt and never saw him in my life until I met him in the court room at the hearing of the Universal case; and I do not think I met any of the counsel for the Comptograph Company in connection with the negotiations for the license. As to Mr. Wyeth, my recollec-

Deposition of Defendant's Witness, Edward Rector, stipulated in from Burroughs case.

tion is that I did make some inquiries of him respecting Mr. Felt's invention, but did not receive any definite or satisfactory information. I remember distinctly that, on one occasion, when I questioned the validity of the Felt patent, he stated that his company had taken the advice or opinion, not only of its regular counsel, who represent it in this case, but of other eminent counsel whom he declined to name, and that all were agreed that the patent was valid and should and would be sustained. I further distinctly remember that Mr. Wyeth never told me anything whatever about Mr. Felt's 1890 model, and that it came as a very great surprise to me, when I examined Mr. Felt's deposition in the Universal case, that he claimed to have made the invention, and to have reduced it to practice, eight years before his application was filed.

X-Q. 97. You would not wish the court to understand that Mr. Wyeth was endeavoring to keep back the facts, would you; such facts, for example, as that the machine was completed, taken down to the census office, an account of it published in the Chicago Tribune; in other words, facts of a kind which must have been generally familiar to adding-machine men?

A. Yes, without any reflection on Mr. Wyeth, I think that was exactly what he intended to do, and did do, in our intercourse prior to the making of the contract. I do not think he desired or intended that I should know anything about Mr. Felt's 1890 model; and whether that was his intention and desire or not, I certainly learned nothing about it. Regarding the assumption of your question that certain facts relating to Mr. Felt's 1890 model were "generally familiar to adding-machine men," I do not believe such facts were generally familiar to adding-machine men at all. I had been a director of the American Arithmometer Company for several years, and

Deposition of Defendant's Witness, Edward Rector, stipulated in from Burroughs case.

its counsel for a longer period, and had had much intercourse with its officers and managers, and the Felt patent had been under discussion at various times throughout a period of three or four years prior to the making of the license contract, and I never heard a suggestion from anyone to the effect that Mr. Felt had made, or claimed to have made, the invention here in controversy in 1890, or any mention of or reference to any such model or machine as he now appears to have made at that time.

X-Q. 98. The first work you ever did for the American Arithmometer Company was the preparation of the application for Mr. Pike's patent about which you have testified, is it not?

A. Yes, but that was about seven years before the making of the license contract, and I had done much other work in the company in the meantime, and had been a director from about the middle of the year 1901.

X-Q. 99. State exactly what it was that you asked Mr. Wyeth about the history of the present invention, as near as you can do so, and state when it was and where it was.

A. It is easy enough to state when and where I had any conversations with Mr. Wyeth, for they were all held at my office and within a few months of the making of the license contract; but I have no recollection whatever of the particular form of any inquiries which I made of him.

X-Q. 100. I suppose that what you asked him was if he knew of any reason why the Felt patent was not a valid patent. Is not that so?

A. No, my inquiries were very much more specific than that; but, in view of later developments, they were not nearly specific or insistent enough. I had learned from Mr. Felt's affidavits, filed with the application for his patent, that he claimed to have built a model or machine, amounting to a reduction to practice of the in-

Deposition of Defendant's Witness, Edward Rector, stipulated in from Burroughs case.

vention, prior to September, 1896. I had also learned from the file of that application that a photograph of that model or machine had been filed in the Patent Office with one of Mr. Felt's affidavits, but that photograph could never be found at the Patent Office after I became interested in investigating the Felt patent. I distinctly remember inquiring of Mr. Wyeth about the model or machine mentioned in the Felt affidavits, and my recollection is that he told me, as he has testified in this case, that it was still in existence. The Felt affidavits stated that this model or machine had been built "many months" prior to the filing of the Hiett application in September, 1896. I had no reason to doubt that this was the fact, and I think Mr. Wyeth further assured me that it was. I naturally, and I think reasonably, assumed that "months" meant months, and not years. Such information as I had been able to secure concerning the date of Mr. Pike's invention satisfied me that he could not go very far back of the application for the Hiett patent; and before the negotiations leading up to the license contract I had come to the conclusion that it was very unlikely that Pike could establish an earlier date of invention than Felt. I think this must have been the reason why I was not more insistent upon definite information concerning Mr. Felt's model or machine mentioned in the affidavits which he had filed in the Patent Office. Had I known at that time that the model or machine in question had been built in 1890, eight years before Mr. Felt's application was filed, I am sure I should have been more persistent in my inquiries of Mr. Wyeth concerning it. As it was, I think my principal discussion with Mr. Wyeth concerning the validity of the Felt patent related to the question of the patentability of the invention over the prior art. I distinctly remember that on one occasion I gave Mr. Wyeth copies of various prior patents which

had come into my possession in the course of my investigation of the Felt patent, and which I thought had more or less bearing upon the validity of the patent, and he said he would submit them to his counsel and see what they thought about them. And he afterwards returned them with the statement that his counsel did not think they affected the validity of the Felt patent.

Deposition of Defendant's Witness, Edward Rector, stipulated in from Burroughs case.

X-Q. 101. Did Mr. Wyeth refuse to answer any of your questions?

A. I cannot say now whether he directly refused to answer any questions or not; but I have a very distinct recollection that he exhibited such reluctance and disinclination to discuss or answer questions concerning the model or machine referred to in the Felt affidavits that I did not press him for information concerning it as I now realize I should have done. It is hardly necessary to say that if he had told me that the model or machine in question referred to in Mr. Felt's affidavit had been built eight years before Mr. Felt's affidavit was filed, I should have been very much interested in following the matter up and ascertaining what had been done respecting the invention in the interim between the building of the model and the filing of the application.

Adjourned until Tuesday, May 5, 1908, at 10 o'clock A. M.

CHICAGO, May 5, 1908.

Met pursuant to adjournment. Present as before.

X-Q. 102. After you received the printed copy of the complainant's pleadings and evidence in the suit of the Comptograph Company against the Universal Company, which was some little time before the case was argued before his Honor Judge Kohlsaat, did you make any inquiries of the Comptograph Company, your licensor, or anybody representing that company, with a view to finding out what Felt had done with his invention during

Deposition of Defendant's Witness, Edward Rector, stipulated in from Burroughs case.

the eight years that elapsed between the making of the 1890 machine and the filing of his application for patent, beyond what was disclosed in the evidence?

A. I think not.

X-Q. 103. In your brief filed on behalf of the Burroughs Company before the Court of Appeals in the Universal suit did you endeavor to show that the invention in controversy and which was the subject-matter of the license contract, was in point of fact not the property of the Comptograph Company by reason of the Felt patent as a source of title thereto, but actually the property of the Burroughs Company by reason of the Pike patent, which "claimed the invention just as broadly as did Felt's application" and patent?

A. The brief will speak for itself on that point. I remember having referred to the Pike patent, and to the fact that, like the Felt patent, it claimed the invention broadly.

X-Q. 104. And the general purport of your argument in that case was that since Felt had delayed giving the public the benefit of the invention until after Pike had patented it, that the Pike patent was the valid one. Is that right?

A. The brief will show for itself what its "purport" was. All I can say is that I did not intend to discuss, and did not discuss, any question respecting the validity of the Pike patent.

X-Q. 105. Did you intend by filing this brief to do anything toward establishing the Pike patent as the patent that covers this invention?

A. I do not believe I had any such thought in mind at the time the brief was filed.

X-Q. 106. Did you discuss with the other officers of your company, or any of them, the advisability of filing this brief for the purpose of assisting in the destruction of the Felt patent?

Deposition of Defendant's Witness, Edward Rector, stipulated in from Burroughs case.

A. No, not for just that purpose. I expressed the opinion to some of the officers or directors of the company that a brief should be filed, for the purpose of adequately presenting to the Court of Appeals one of the defenses to the Felt patent which would inevitably have to be met in any future litigation on the patent, and which I did not think had been adequately presented to the Circuit Court, nor in the brief which had been filed in the Court of Appeals.

X-Q. 107. Did they ask you what good that would do the Burroughs Company?

A. I do not recall whether they asked that question or not, but they fully understood what good it would do the Burroughs Company.

X-Q. 108. And what good would it do the Burroughs Company?

A. It would do it this good: If the patent should be sustained by the Court of Appeals, after an adequate presentation of all of the defenses to the patent, there would be a reasonable presumption that it would also be sustained by other courts in other litigation against other infringers. Inasmuch as the sole purpose of the making of the license contract was to secure a monopoly of the invention to the Comptograph and Burroughs companies, and the suppression of infringements of the patent, the Burroughs Company was desirous that the adjudication upon the patent should be such as would effect this purpose as far as possible. This was fully set forth in the brief which I filed in the Court of Appeals, the second paragraph on page 6, reading as follows:

> "In this situation of affairs, therefore, the Burroughs Company is vitally interested in the outcome of the present litigation—interested in having the decree of the Circuit Court affirmed and the Felt patent sustained if the latter is in fact and in law a good and valid patent, which ought to be sustained; and equally interested in having the decree reversed and

Deposition of Defendant's Witness, Edward Rector, stipulated in from Burroughs case.

the patent declared void if it is not a valid patent and ought not to be sustained. In other words, interested in having the scope and validity of the patent rightfully and finally determined, as far as possible, in the present suit, in order that, if the patent be sustained, the monopoly for which it has agreed to pay may be effectively secured to it."

X-Q. 109. And you thought it would be better to try all of the issues in one case, whether the testimony had been prepared with a view to those issues or not, did you?

A. I thought all of the defenses presented by the pleadings and the record in the case ought to be fully presented to the court. One of these defenses certainly was that of abandonment. That defense had not, in my judgment, been fully presented in the court below, or in the brief filed in the Court of Appeals; and it was for the purpose of presenting it more fully that my brief was filed.

X-Q. 110. You thought it would be better, did you, for the interests of the Felt patent that two defenses should be simultaneously presented? One that the invention had been put into public use in 1890 and the other that the invention had been concealed in 1890? One that the 1890 machine was of the nature of an abandoned experiment and the other that this same machine was put on sale in 1890? You thought that this sort of exercise would be good for the licensor and its counsel, did you?

A. I do not recall having thought about all the things mentioned in your question, and therefore will not attempt to argue the matter with you.

X-Q. 111. Whereabouts in the pleadings do you find the authority for saying that your brief was based on the pleadings in the Universal suit; do you mean the amended answer?

A. The bill of complaint and original answer directly raised the broad issue of abandonment, which would have amply sufficed for the presentation of that defense.

Deposition of Defendant's Witness, Edward Rector, stipulated in from Burroughs case.

X-Q. 112. Do you understand that the defense is raised in the amended answer?

A. I have not examined the amended answer recently, but my recollection is that it specifically set up the defense of abandonment by prior use and sale.

X-Q. 113. You have the original answer here. Please point out the part to which you refer.

A. The bill of complaint alleged (page 4 of Court of Appeals Record) that Mr. Felt was the true and first inventor of the invention described and claimed in the patent in suit, and that it "had not been patented or described in any printed publication in this or any foreign country before his invention thereof, nor more than two years prior to his hereinafter recited application for a patent therefor, and *had not been abandoned or proved to have been abandoned.*" And the defendant's original answer (page 11, Court of Appeals Record) denied all of these allegations of the bill, and in particular denied "that it is true that the alleged invention, the subject-matter of the said letters patent, was not abandoned by the said Dorr E. Felt before he applied for letters patent of the United States for the same." The issue of abandonment thus raised by the original pleadings in the case seems to me to have been quite broad enough to include the particular defense of abandonment discussed in the brief which I filed in the Court of Appeals.

X-Q. 114. Do you think that this general denial of the allegation in the bill of statutory prerequisites is sufficient to justify the particular kind of abandonment, such, for example, as putting the machine on sale?

A. The defendant in the Universal case apparently thought not, and filed an amended answer, but my brief was not concerned at all with the defenses of public use or putting on sale, and I do think that the issue of abandonment raised by the pleadings to which I have called

Deposition of Defendant's Witness, Edward Rector, stipulated in from Burroughs case.

attention was sufficient to include the defense of abandonment discussed in my brief. This, however, is a matter which I think you may discuss more profitably with the court than with me.

X-Q. 115. The paragraph of the answer from which you quoted reads as follows, does it not?

> "Further answering, these defendants deny that it is true that before the 4th day of July, A. D. 1899, or at any other time, Dorr E. Felt was the true and first inventor of a certain new and useful improvement in tabulating machine described in the said letters patent hereinbefore mentioned; and defendants deny that it is true that the tabulating machine described in said letters patent had not been known or used by others in this country and had not been patented or described in any printed publication in this or any foreign country before said invention thereof; and defendants deny that it is true that the tabulating machine described in said letters patent had not been in public use or on sale for more than two years prior to the time that said Dorr E. Felt filed his application for United States letters patent for the same; and defendants deny that it is true that the alleged invention, the subject-matter of the said letters patent was not abandoned by the said Dorr E. Felt before he applied for letters patent of the United States for the same; and in regard to all of these allegations in the bill of complaint defendants, and each of them, require strict proof on the part of complainant."

A. Yes.

X-Q. 115*a*. Have you a suit pending on the Pike patent against an infringer?

A. The Burroughs Adding Machine Company has a suit pending on the Pike patent against Mr. Pike himself, and his company, the Pike Adding Machine Company of New Jersey.

X-Q. 116. That is the Pike patent to which you have referred in your brief, is it?

A. Yes.

Deposition of Defendant's Witness, Edward Rector, stipulated in from Burroughs case.

X-Q. 117. Is the first claim of that Pike patent involved in the litigation?

A. Yes, I believe infringement of that claim, along with a number of others, is asserted in that suit.

X-Q. 118. When was the bill filed in that case?

A. Something more than a year ago. I can ascertain the exact date if you desire it.

X-Q. 119. I wish you would.

A. According to my docket, the bill appears to have been filed on July 23rd, 1906.

X-Q. 120. And the Circuit Court of Appeals rendered its decision in the month of August, 1906, did it not?

A. That is my recollection, which is confirmed by the report of the case in the Federal Reporter, to which you call my attention.

X-Q. 121. I see your brief on behalf of the Burroughs Company in the Court of Appeals is dated April 16th, 1906. Is that date right?

A. Yes, I believe that is the date on which the brief was filed in the Court of Appeals.

X-Q. 122. What has become of those blue-prints that you may have used in the preparation of the Pike application, and to which you refer in your answer to Q. 3?

A. I recall only one blue-print, although there may have been others. The one which I remember was a print showing the modified or alternative construction appearing in Figures 10, 11 and 12 of the Pike patent. I have somewhere in my office a blue-print which I believe to be this particular print, although I cannot be positive of it. I will look it up and submit it to you if you wish.

X-Q. 123. What has become of the machine from which you made a drawing, Figures 1 to 9, and the other machine from which you may have made the drawings of Figures 10, 11 and 12 of the Pike patent?

A. I do not know. I have never seen them since they

Deposition of Defendant's Witness, Edward Rector, stipulated in from Burroughs case.

were taken from my office, shortly after the application for the Pike patent was prepared.

X-Q. 124. Where is Martin H. Olsen now?

A. I think he is somewhere in Chicago, although I do not know his address. I have not seen him for some considerable time—perhaps a year or more.

X-Q. 125. Who attended to the prosecution of the Pike application in the Patent Office after the same was filed?

A. My impression is that the firm of Foster & Freeman, of Washington, did. I know nothing whatever about the prosecution of the application, and do not now recall that I ever heard of the application again, after transmitting the papers which I had prepared to the Arithmometer Company at St. Louis, until the patent issued and came to my attention. I think the file of the application shows that the attorneys above mentioned had charge of its prosecution; and I know that they had previously done work for the American Arithmometer Company.

X-Q. 126. All that you did about the application was to have proper drawings made, prepare a proper specification and claims, and send these to the American Arithmometer Company; the latter company then sent the papers to Foster & Freeman, with a power of attorney to them, and Foster & Freeman prosecuted the case to the final issue of the patent?

A. I have no personal knowledge as to what the American Arithmometer Company did with the application papers after I had prepared them and sent them to it. But you have stated all that I personally had to do with the application.

Recess until 1:30.

X-Q. 127. On page 17 of your brief in the foot-note, after explaining the reasons why you preferred to rely

Deposition of Defendant's Witness, Edward Rector, stipulated in from Burroughs case.

upon the Pike patent rather than the Hiett as the intervening right to create the equitable estoppel that your brief argues was created against Mr. Felt, you add the following sentence:

> "In any event, the estoppel is in favor of the public, so that the ownership of the intervening invention and patent was immaterial."

Kindly explain what you mean by that.

A. What I presumably meant was that the public was entitled to the benefit of the estoppel, if there was one, as against Felt, regardless of the ownership of the intervening rights; and that it was therefore perhaps immaterial whether the Pike invention and patent, or the Hiett invention and patent, should be set up as the intervening right.

X-Q. 128. You did not mean, then, that the invention had become public property, did you?

A. No, I do not think that meaning necessarily follows from the language employed.

X-Q. 129. In your brief referred to, you did not argue that the invention had become public property, did you?

A. You have introduced a copy of the brief in evidence in this case, and it will speak for itself on such matters as this.

X-Q. 130. Why do you object to stating the purport of your brief; you wrote the brief, you are an expert on what it means. It is long and somewhat involved, and I think I am right in asking you to state what your argument was intended to be, in brief form. Will you please answer the question?

A. I prefer that the brief should speak for itself.

X-Q. 131. Do you decline to answer further than that?

A. Yes.

Cross-examination closed.

Deposition of Defendant's Witness, Edward Rector, stipulated in from Burroughs case.

Re-direct Examination by Mr. Davis.

R-D. Q. 132. You have been cross-examined about the brief which you filed in the Court of Appeals in the Universal case. Did that brief contain any misstatements or misrepresentations of facts as intimated in the cross-examination here, and as charged by Mr. Wyeth in his testimony in this case?

A. No, it did not, so far as I am aware. The brief was based almost entirely upon the record in the Universal case, and in so far as any of its statements may have gone beyond that record, they were true, as I then believed, and I now believe them to have been true. I certainly had no thought of misstating or misrepresenting any facts in that brief, and nothing has been called to my attention, either in Mr. Wyeth's testimony or elsewhere, which leads me to now believe that any material mistake was made in any statement in the brief.

Re-direct examination closed.

Re-Cross Examination by Mr. Munday.

R-X-Q. 133. Are you the same Edward Rector who cross-examined Mr. Wyeth and Mr. Felt in their depositions given by them in the cause at bar?

A. Yes.

Deposition closed.

EDWARD RECTOR.

It is stipulated and agreed by counsel that the original letters constituting "Defendant's Exhibit Rector-Pike Correspondence" may be withdrawn and the copies thereof introduced in the record used in lieu thereof.

IN THE CIRCUIT COURT OF THE UNITED STATES, NORTHERN DISTRICT OF ILLINOIS, EASTERN DIVISION.

Comptograph Company,
Complainant,
vs.
Burroughs Adding Machine Company,
Defendant.
} In Equity. No. 28,782.

CHICAGO, May 22, 1908.

Introduction of evidence on behalf of the defendant in the above entitled cause, pursuant to informal notice, and by consent, at Room No. 1625 Monadnock Building, Chicago, Illinois, before Louis B. Erwin, notary public, acting by consent as special examiner in said cause, under the equity rules, beginning at 10 A. M. on Friday, May 22, 1908.

Present: John W. Munday, of counsel for complainant, and Edward Rector, of counsel for defendant.

Deposition of Defendant's Witness, Emil P. Wenger, stipulated in from Burroughs case.

And thereupon EMIL P. WENGER, a witness produced on behalf of the defendant, being first duly sworn, deposes and says, as follows, in answer to interrogatories by Mr. Rector:

Q. 1. How old are you, Mr. Wenger, and where do you live?

A. Forty-two years of age, and I live at Detroit, Michigan.

Q. 2. What is your occupation?

A. I am assistant secretary and treasurer of the Burroughs Adding Machine Company.

Q. 3. Who has charge of the machine records of that company relating to the manufacture, shipment and sale of adding machines made by the company?

Deposition of Defendant's Witness, Emil P. Wenger, stipulated in from Burroughs case.

A. I have general charge of such records.

Q. 4. Do those records of which you have such charge include the records of the American Arithmometer Company, the predecessor in business of your present company?

A. They do.

Q. 5. We are desirous of ascertaining, Mr. Wenger, what the records of the American Arithmometer Company show respecting the first broad frame or wide paper carriage adding machines made by that company. Have you here with you any of the records of that company containing data upon this subject'

A. I have such records with me.

Q. 6. It is shown by the proofs already taken in this case that the American Arithometer Company was in the possession of one such broad frame or wide paper carriage machine in the spring of the year 1897, and that such machine was sent to Chicago in March, 1897, and used in connection with the preparation of an application for what is known as the Pike patent. Do the records which you have here contain any data relating to such a machine?

Mr. MUNDAY: The conclusions in the question are objected to as not fully supported by the evidence.

A. These records do.

Q. 7. Please point out the particular records relating to the subject.

A. I have here a book which is known in our office as a machine record journal, containing data of the machine in question, and contains the general history of machines manufactured and sold by the American Arithmometer Company. The date of the earliest entry I find on the first page, being May 22, 1894, and I believe it contains data of dates possibly as late as the year 1900.

Q. 8. Will you now please point out any entries you

find in this record relating to the machine inquired about in the previous question?

Deposition of Defendant's Witness, Emil P. Wenger, stipulated in from Burroughs case.

A. I find on page 453 of the machine record journal referred to the following entries, under machine number 1184:

"1184.

7/29/96 Bourbon Bank, Paris, Ky.
9/9 " Agricultural Bank, Paris, Ky.
10/10 " Capitol State Bank, Jackson, Miss.
12/24 " Factory.

BROAD PRINTING FRAME (in red ink).

3/23/97 Joseph Boyer, Chicago, Ills.
5/24 " Factory.
5/27 " Changed Back (in red ink).
6/11 " Mason & Spiekerman, Selmer, Tenn.
6/23 " Mercantile Bank, Memphis, Tenn."

Q. 9. Have you at hand any other record of the American Arithmometer Company showing the shipment of this machine No. 1184 to Joseph Boyer at Chicago, on March 23, 1897?

A. I have here a shipping order book of the American Arithmometer Company, in which appears order No. 802, containing the following entry:

"Joseph Boyer
Chicago, Ills.

Nat. Exp. Charges paid.
As per above 3/23, 1907 Billed. .....
Machine No. 1184.

Signed CRAFT."

Q. 10. It further appears by the testimony which has been taken in this case that a second broad frame or wide paper carriage adding machine was sent from St. Louis to Chicago by the American Arithmometer Company in May, 1897, and used in connection with the preparation of the application for the Pike patent referred to. Do the records which you have here contain any data relating to such second machine?

A. I find on page 634 of the machine record journal

Deposition of Defendant's Witness, Emil P. Wenger, stipulated in from Burroughs case.

before referred to, the following entries under machine No. 1540:

"1540.
BROAD FRAME.
5/20/97 Wyeth & Langhorne, Chicago, Ills.
6/4 " Factory.
7/29 " St. Louis Trust Co., St. Louis, Mo.
(Side check table)"

Q. 11. Have you at hand any other record of the American Arithmometer Company relating to the shipment of this broad frame machine No. 1540 to Chicago on May 20, 1897?

A. I have here shipping order book of the American Arithmometer Company containing an order, No. 933, on which appears the following:

"Charge W & L
Mark Wyeth & Langhorne,
Chicago,
Ills.
Via Nat. Exp. Charges paid.
Shipped As per above 3/20, 1897. Billed. . . . . .
Machine No. 1540.
Signed CRAFT."

Q. 12. Do the records of the American Arithmometer Company which you have here contain any data relating to any other broad frame or wide paper carriage adding machine of approximately the same date as the two to which you have referred?

A. The machine record journal, referred to in a previous answer, contains data of several other machines of this type. On page 638, the following entries appear under machine No. 1549:

"1549.
BROAD PRINTING FRAME. SIDE CHECK TABLE.
4/15/97 W. J. Cannon, Lincoln, England."

On page 651 of the machine record journal appear the following entries, under machine No. 1575:

Deposition of Defendant's Witness, Emil P. Wenger, stipulated in from Burroughs case.

"1575.
BROAD FRAME.
8/11/97 J. H. Wyeth, Jr., Chicago, Ills.
10/23 " Montgomery Ward & Co., Chicago, Ills.
10/14 " Factory (for repairs).
10/22 " J. H. Wyeth, Jr., Chicago, Ills.
10/23 " Montgomery Ward & Co., Chicago, Ills."

On page 639 of the record journal, I find under Machine No. 1551, the following entries:

"1551
BROAD PRINTING FRAME.
1/15/98 Henry Wells, Washington, D. C.
1/22/98 Citizens Bank, " " " "

Q. 13. Have you here any other record of the American Arithmometer Company relating to the shipment of broad frame machine No. 1549 to W. J. Cannon on April 15, 1897?

A. I have here shipping order book of the American Arithmometer Company, containing order No. 842, on which appears the following:

"Charge W. J. Cannon
Mark W. J. Cannon,
Lincoln,
England.
Via Natl Exp. Co. Charges collect.
to New York.
Shipped As per above 4/15, 1897. Billed .....
Machine No. 1549."

Q. 14. Have you any other record, besides the machine record journal, to which you have referred, containing any data relating to the shipment of broad frame machine No. 1575 to J. H. Wyeth, Jr., at Chicago, on August 11, 1897?

A. I have not that book containing the shipping order at hand now, but may be able to produce it later.

Q. 15. Have you at hand any other record than the machine record journal relating to the shipment of broad

Deposition of Defendant's Witness, Emil P. Wenger, stipulated in from Burroughs case.

frame machine No. 1551 to Henry Wells at Washington, D. C., on January 15, 1898?

A. I have here shipping order book of the American Arithmometer Company containing order No. 2444, containing the following entry:

"Charge Henry Wells.
March J. T. Langhorne,
Washington, D. C.
Via Adams. Charges paid.
Shipped as per above (dated indistinct) Billed.....
Machine No. 1551, 6006."

Q. 16. It appears that the date upon this shipping order No. 2444 is too indistinct to be read. Can you fix the date of the order in any other way?

A. The order No. 2443 next preceding, and order No. 2445, next succeeding order No. 2444, both bear dates January 15, 1898. Besides this, the machine record journal shows that the date of this shipment is 1/15/98.

Q. 17. Do you find among the shipping order books to which you have been referring, a record of any other shipment of machine No. 1551, either before or after its shipment to Washington, D. C., on January 15, 1898?

A. I find in a shipping order book of the American Arithmometer Company, order No. 929, bearing the following entry:

"Mark E. G. Langhorne,
New York.
Via Nt. Exp. Charges paid.
Shipped As per above 5/19, 1897. Billed .....
Machine No. 1551.
Signed CRAFT."

Q. 18. Do you find among the shipping order books which you have produced a record of the shipment of any other broad frame or wide paper carriage adding machines than the ones you have already referred to?

A. I find a record of the shipment of broad frame machine No. 1951 on February 4, 1898, to the Cambridge

Deposition of Defendant's Witness, Emil P. Wenger, stipulated in from Burroughs case.

Gas Light Company, Cambridge, Massachusetts, the entry on this order reading as follows:

"No. ARTICLES.
1 Burroughs Registering Acc'tants.
Broad Frame
#1951.
Charge W. B. Manny.
Mark Cambridge Gas Light Co.
Cambridge, Mass.
Via National Charges Paid.
Shipped As per above 2/4, 1898. Billed .....
Machine No. 1951.

Signed HALLE."

By Mr. MUNDAY: Since it does not appear in whose handwriting the entries in the machine record journal referred to by the witness are made, nor that the witness knew himself of their being made at the time, all of the testimony in relation to these entries is objected to, including the extracts in said book printed in the record. And for the same reason the alleged extracts from the order books as entered in the record are objected to as incompetent and not the best evidence. No objection is made, however, to the copying of the entries into the record, as a convenience.

Q. 19. Have you at hand any other record of the American Arithmometer Company relating to the sale of the several broad frame adding machines to which you have referred; I mean any other record than the machine record journal?

A. I have here a sales record book containing data additional to that contained in the books previously referred to in my examination.

Mr. MUNDAY: Objected to as incompetent.

Q. 20. What entries, if any, do you find in this sales record book respecting the broad frame machine No. 1549, which appears by the machine record journal to have been shipped to W. J. Cannon, at Lincoln, England, on April 15, 1897?

Deposition of Defendant's Witness, Emil P. Wenger, stipulated in from Burroughs case.

A. I find on page 174 of the sales record book, the following entry:

"Mch. No. 1549 Date of Sale. 4/15/97 Name of Purchaser. W. J. Cannon Brd. Frame. Lincoln, England."

Q. 21. Do you find in the sales record book referred to any entry respecting the sale of machine No. 1540 to the St. Louis Trust Company?

A. I find on page 44 of the book mentioned the following entry:

"Mch. No. Date of Sale. Name of Purchaser. 1540 2/27/97 St. Louis Trust Co., St. Louis, Mo."

Q. 22. It appears from the entry to which you have just called attention that the original number of the machine covered by the entry was 1454, and that that number was canceled by drawing a line through it and No. 1540 written above it. Can you say what this indicated, respecting the transaction?

Mr. MUNDAY: Objected to unless it be shown that the witness himself made the change, or was present at the time it was made. Otherwise the question is incompetent.

A. I believe it indicates that the machine No. 1454 was originally delivered to the St. Louis Trust Company and subsequently replaced by machine No. 1540.

Mr. MUNDAY: Answer objected to as not evidence.

Q. 23. Do you find any entry in the sales record book referred to concerning the sale of broad frame machine No. 1575 to Montgomery Ward & Co., Chicago?

A. On page 9 of the book referred to I find the following entry, with respect to this machine:

"Mch. No. Date of Sale. Name of Purchaser. 1575 11/30/97 Broad Frame Montgomery Ward & Co., Chicago, Ill."

Q. 24. Do you find in the sales record book referred

Deposition of Defendant's Witness, Emil P. Wenger, stipulated in from Burroughs case.

to any entries relating to the sale of broad frame machine No. 1551?

A. On page 51 of this book I find the following entry, relating to the sale of machine No. 1551:

"Mch. No. Date of Sale. Name of Purchaser.
1551 1/27/98 Citizens Nat. Bank,
Washington, D. C."

Q. 25. Do you find in the sales record book referred to any entry respecting the sale of broad frame machine No. 1951?

A. On page 126 of the sales record book appears the following entry in relation to this machine:

"Mch. No. Date of Sale. Name of Purchaser.
1951 3/1/98 National Bank of the Republic,
Chicago, Ill."

By Mr. RECTOR: I ask to have the Machine Record Journal, produced and referred to by the witness, marked for identification, "Defendant's Exhibit Machine Record Journal," and I offer in evidence the entries therein referred to by the witness on pages 453, 634, 638, 639 and 651.

Br. Mr. MUNDAY: The offer in evidence of the entries in said Machine Record Journal is objected to because the said entries are not verified or proven and contain internal evidence of having been changed.

By Mr. RECTOR: I also ask to have the four shipping order books produced and referred to by the witness marked for identification "Defendant's Exhibits Shipping Order Books Nos. 1, 2, 3 and 4," respectively, and offer in evidence the particular shipping orders therein to which the witness has called attention, and which have been copied into the record in connection with his examination.

By Mr. MUNDAY: The offer is objected to because the said entries have not been verified or proved.

By Mr. RECTOR: I also ask to have the sales record book, produced and referred to by the witness, marked for identification "Defendant's Exhibit Sales Record Book," and offer in evidence the en-

Deposition of Defendant's Witness, Emil P. Wenger, stipulated in from Burroughs case.

tries therein referred to by the witness on pages 9, 44, 51, 126 and 174.

By Mr. MUNDAY: The last above objection is repeated.

Recess for luncheon until 2 o'clock.

Met pursuant to adjournment.

Q. 26. Mr. Wenger, have you had any experience in connection with the manufacture of special tools for the making of adding machines, and any knowledge as to the cost of such special tools?

A. I have had such experience, and have knowledge of the cost of special tools used in the manufacture of adding machines, having been for a number of years an officer and manager of the Boyer Machine Company, formerly of St. Louis, Missouri, which company made for the American Arithmometer Company a complement of special tools and furnished a number of general machine tools for the production of the Burroughs adding machine.

Q. 27. Please state what the tools were which the Bover Machine Company made for the American Arithmometer Company for the manufacture of the Burroughs adding machine.

By Mr. MUNDAY: Objected to as wholly immaterial; besides, it does not appear that the witness knows what they were.

A. Generally speaking, these tools consisted of dies for blanking, perforating and forming parts of the adding machine which were made of sheet metal, jigs for drilling and otherwise finishing cast iron parts, test jigs for measuring the accuracy of parts completed or partly completed, and certain fixtures for holding many of the parts as they were operated upon in the process of production.

Q. 28. To what extent did the special tools which you

Deposition of Defendant's Witness, Emil P. Wenger, stipulated in from Burroughs case.

have referred to as having been manufactured by the Boyer Machine Company for the American Arithmometer Company supply all of the special tools required for the manufacture of the Burroughs adding machine by the Arithmometer Company?

By Mr. MUNDAY: Objected to as wholly immaterial; besides it does not appear that the witness knows.

A. The tools referred to in my previous answer were sufficiently adequate for the production of the Burroughs adding machine to the extent of perhaps one hundred or more machines per month.

By Mr. MUNDAY: Objected to as incompetent. It does not appear that the witness had any knowledge of the Burroughs Adding Machine Company at any time, or of its predecessor, the American Arithmometer Company.

Q. 29. Did they constitute all of the special tools used by the American Arithmometer Company at that time in the manufacture of the Burroughs adding machine?

A. The tools I refer to were not, as a matter of fact, used by the American Arithmometer Company immediately after the completion of said tools, but were employed for the production of Burroughs adding machines, built by the Boyer Machine Company, under contract, for the American Arithmometer Company.

Q. 30. Did they constitute all of the special tools used by the Boyer Machine Company in the manufacture of Burroughs adding machines for the American Arithmometer Company?

A. They did.

Q. 31. And how complete, or incomplete, were they, as a set of special tools for that purpose?

A. At that time they were believed to be as complete as could have been desired for the quantity of machines demanded by the American Arithmometer Company.

Deposition of Defendant's Witness, Emil P. Wenger, stipulated in from Burroughs case.

Q. 32. Do you know at what cost this set of special tools was produced by the Boyer Machine Company, and at what price supplied to the American Arithmometer Company?

By Mr. MUNDAY: The question is objected to, for it does not appear that the tools were ever supplied to the American Arithmometer Company.

A. Approximately, these special tools, together with a number of general machine tools, were supplied to the American Arithmometer Company at somewhat less than $25,000. The cost to the Boyer Machine Company was enough less than this to leave a very fair margin of profit to the Boyer Machine Company.

Q. 33. Where were the special tools built by the Boyer Machine Company?

A. On the premises of the Boyer Machine Company, at No. 244 Dickson street, St. Louis, Missouri.

Q. 34. How familiar were you with these tools and with the cost of them at the time they were being built?

A. I was constantly in touch with the work while they were being made, entered the time of all of the workmen employed on them, bought the material required, and daily saw the work as it progressed.

Q. 35. Did you ever have any subsequent experience in, or connection with, the manufacture of special tools for the making of the Burroughs adding machine?

A. I did.

Q. 36. Please state what it was, and what was the occasion of it.

By Mr. MUNDAY: Objected to as immaterial.

A. In the year 1897 the Boyer Machine Company received an order from W. J. Cannon, of Lincoln, England, for a set of special tools, such as previously made for the American Arithmometer Company; also a number of general machine tools, such as previously supplied by the

Deposition of Defendant's Witness, Emil P. Wenger, stipulated in from Burroughs case.

Boyer Machine Company to the American Arithmometer Company, for the production of the Burroughs adding machines in England.

Q. 37. What was your connection with the Boyer Machine Company at the time this order from W. J. Cannon was received?

A. I was an officer and the manager of the Boyer Machine Company at that time.

Q. 38. Did the Boyer Machine Company supply the special tools in question to Mr. Cannon?

A. They were completed and shipped to Nottingham, England, on Mr. Cannon's order some time during the year 1898.

Q. 39. Did the Boyer Machine Company build these tools in its own shop?

A. Yes, all excepting the general machine tools, which were purchased of regular machine tool manufacturers.

Q. 40. What connection and familiarity did you personally have with these special tools while they were being built in the shop of the Boyer Machine Company?

A. Generally, the same as the case of the production of the first set of special tools which were made for the American Arithmometer Company, but I was at the later time not to the same extent in touch with all of the details.

Q. 41. How complete, or incomplete, were these special tools as a set of special tools for the commercial manufacture of the Burroughs adding machine?

A. They were somewhat more complete than the first set of tools made, there having been additions made by the American Arithmometer Company to the initial set of tools made for the latter concern, during the period intervening between the completion of the first set and the making of the second set of tools.

Q. 42. Did they constitute a complete, or incomplete,

Deposition of Defendant's Witness, Emil P. Wenger, stipulated in from Burroughs case.

set of special tools for the manufacture of the Burroughs adding machine in commercial quantities?

A. They were a complete set for that purpose.

Q. 43. At what price was this set of special tools supplied to Mr. Cannon by the Boyer Machine Company.

A. At the price of about $36,000.

Q. 44. And what profit did the Boyer Machine Company make on the contract?

A. Approximately $10,000.

Q. 45. Did either of the sets of special tools to which you have referred include specials tools for the manufacture of what is known as the broad frame or wide paper carriage of the Burroughs adding machine?

A. Neither of the two sets of tools referred to contained special tools for the broad frame carriage.

Q. 46. Have you at any time had any connection with the manufacture of special tools for producing the broad frame paper carriage of the Burroughs machine, and any acquaintance with the cost of such tools?

A. I have. Within the past two years, or two and one-half years, the Burroughs Adding Machine Company at Detroit itself partly made a set of such tools, the remainder of the equipment having been made for the Burroughs Company by a concern in New England, and the total cost of the equipment was about $10,000.

Q. 47. How extensive was this set of special tools, as compared with the two previous sets of special tools made for the manufacture of the Burroughs adding machine proper, or without the broad frame paper carriage?

A. By the aid of the special tools made for the production of the broad frame paper carriage, the company was enabled to produce upward of fifty machines per day. As stated in answer to a previous question, with the original special equipment of tools for producing a machine

Deposition of Defendant's Witness, Emil P. Wenger, stipulated in from Burroughs case.

without the broad frame paper carriage, a production of upward of one hundred machines per month was had.

Q. 48. Referring to Q. and A. 14 of your examination this morning, have you now at hand the shipping order book of the American Arithmometer Company containing the order for the shipment of broad frame machine No. 1575 to J. H. Wyeth, Jr., at Chicago, on August 11, 1897?

A. I have at hand the order book containing this order, which is numbered 1158, and the following entry appears thereon:

"Mark J. H. Wyeth, Jr.,
Chicago,
Ills.
Via Nat. Exp. Charges paid.
Shipped As per above 8/11, 1897. Billed .....
Machine No. #1575.
Signed, HALLE."

By Mr. RECTOR: I ask to have the shipping order book last produced by the witness marked for identification, "Defendant's Exhibit Shipping Order Book No. 2ª," and offer in evidence order No. 1158 herein, to which the witness has directed attention.

Mr. MUNDAY: Like objection is made as heretofore.

Direct examination closed.

Cross-Examination by Mr. Munday.

X-Q. 49. How long have you been in the employment of the Burroughs Adding Machine Company or its predecessor in business, the American Arithmometer Company?

A. I have been in the active employment of the Burroughs Adding Machine Company since March, 1906. I was at no time in the employ of the American Arithmometer Company.

X-Q. 50. How long have you had general charge of the machine records of the Burroughs Adding Machine

Deposition of Defendant's Witness, Emil P. Wenger, stipulated in from Burroughs case.

Company, which you say include the records of the American Arithmometer Company?

A. Since March, 1906.

X-Q. 51. Does this book which you have produced here, and which you say is known in your office as a "machine record journal," constitute all of the machine records of that character which the Burroughs Adding Machine Company had?

A. The books submitted in evidence here are only a part of similar records of the Burroughs Adding Machine Company.

X-Q. 52. What is the number of the first wide carriage machine the Burroughs Adding Machine Company built; wasn't it 4001?

A. That I am not in a position to answer without reference to the records.

X-Q. 53. Turning to page 453 of the machine record journal, I come to the entry which you have copied in your answer to Q. 8. In the middle of that entry is a line in red ink reading, "Broad Printing Frame." Is that entry of those words written over and erased?

A. There appears to have been an entry in black ink made on this line, which was erased and the entry in red ink, "Broad Printing Frame," written on the line instead.

X-Q. 54. The original entry seems to have had a date in the date column, and seems to have had the word "Cal." in the place where the state occurred in the other entry. Is that right?

A. You are correct.

X-Q. 55. I take it from this record that this machine was finally sold to the Mercantile Bank at Memphis, Tennessee. Is that right?

A. I believe it is.

X-Q. 56. So far as you can determine from this book,

Deposition of Defendant's Witness, Emil P. Wenger, stipulated in from Burroughs case.

this machine No. 1184 was made some time previous to July 29, 1896; then shipped to the Bourbon Bank at Paris, Kentucky; then on the 9th day of September, 1896, taken to the Agricultural Bank at Paris, Kentucky; then on the 10th day of October, 1896, taken to the Capitol State Bank at Jackson, Mississippi; then on December 24th, Christmas eve, 1896, sent back to the factory; then we have the hiatus due to the erasure; then on the 23d day of March, 1897, it was delivered to Joseph Boyer, Chicago, Illinois; then on the 24th day of May, it was returned to the factory; then on the 27th day of May it was in red ink "Changed Back"; then on the 11th day of June, 1897, it was sent to Mason & Spiekerman, Selmer, Tennessee; and finally, on the 23d day of June, 1897, it was sent to the Mercantile Bank at Memphis, Tennessee; is that right?

A. What you have recited is in the record under machine No. 1184, in the machine record journal.

X-Q. 57. Can you tell from that entry and the record what condition the machine was in when it was sent to Mason & Spiekerman, Selmer, Tennessee; I mean, in what condition in respect to being a broad frame machine?

A. I believe at that time it was a narrow frame machine.

X-Q. 58. So the history of that machine in brief, as you gather from the record, is that it was at one time a broad frame machine, in which condition it was sent to Joseph Boyer, at Chicago, Illinois, on March 23, 1897; then it was returned to the factory and the broad frame taken off of it and the machine changed back to a narrow frame; is that right?

A. According to the record you are correct, the machine having been a broad frame machine until May 27, 1897.

Deposition of Defendant's Witness, Emil P. Wenger, stipulated in from Burroughs case.

X-Q. 59. How long had that machine been a broad frame machine before it was changed back, according to the record?

A. The period during which this machine was a broad frame machine was at least two months.

X-Q. 60. Turning to page 634, I notice the word "Broad Frame" written in red ink, but on the same line there are a number of black specks, as though the words on the opposite page has transferred, or as though an original entry had been carefully taken out with chemicals; is that right?

A. Yes, you are right in your question. It is evident, however, that, as you suggest in your question, the black specks you refer to have been transferred from the first line on page 635, evidently by reason of the writer having omitted to use a blotter.

X-Q. 61. Did you find any cash entry for machine No. 1540?

A. I did not.

X-Q. 62. The fact is that on March 8, 1897, the books show that cash received for No. 1454, sold to the St. Louis Trust Company for $375; is that right?

A. I cannot answer that question.

X-Q. 63. I turn to page 9 of the sales record book and note that the words "Broad Frame," which occurs in the line opposite the name of Montgomery Ward & Company, is written above the line; is that right?

A. Yes, sir.

X-Q. 64. So far as you know, that might have been written in long after the rest of the entry?

A. Possibly so.

X-Q. 65. I turn to page 174 of the sales record book and refer to the entry which you have quoted, and call your attention to the fact that the words "Brd. Frame"

Deposition of Defendant's Witness, Emil P. Wenger, stipulated in from Burroughs case.

are entered in pencil, while the number 1549, and the date, "4/15/97," is entered in ink; is that right?

A. It is.

X-Q. 66. Do you know in whose handwriting these books are, and whether in the handwriting of more than one person?

A. I believe I know the handwriting in some of the entries. They do not appear to be all in the same handwriting.

X-Q. 67. Are any of the entries in your handwriting?

A. No, sir.

X-Q. 68. Did you see any of the entries made?

A. Not to my recollection.

X-Q. 69. I believe it appears in the case of at least one machine, namely, No. 1184, that the machine was originally an old-style or narrow frame machine, which was changed over into a broad frame machine, and then changed back into a narrow frame machine. Do you know, as a matter of fact, whether some of these other machines of which you have testified, namely, Nos. 1540 and 1549, for example, were not also originally narrow machines and changed over?

A. I do not know as a matter of fact.

X-Q. 70. Do you know, as a matter of fact, that any machines were changed over?

A. I do not.

X-Q. 71. Do you know what series of numbers were given to the broad frame machines after the manufacture of them was begun?

A. I do not.

X-Q. 72. You do not know, then, that the broad frame machines were numbered from 4001 upward?

A. I do not.

X-Q. 73. But that would be the practice, would it not?

A. That I cannot answer.

Deposition of Defendant's Witness, Emil P. Wenger, stipulated in from Burroughs case.

X-Q. 74. I call your attention to page 750 of the machine record journal and ask you to state if it is not a fact that the machine that was shipped to W. J. Cannon, on the 25th day of November, 1895, is not there numbered 5001; and is it not also true that there is a sequence of these machines from number 5001 to 5050, all apparently sent to W. J. Cannon, Lincoln, England, on November 23, 1895?

A. It is a fact that the numbers and dates and the consignee of shipment referred to appear in the machine record journal, beginning with page 750.

X-Q. 75. And it is customary, is it not, for manufacturers when they change the style of a machine to also change the allotment of the numbers, as, for example, from 2000, say, to 3000, or 4000 or 5000, for the beginning of a new sequence?

A. That is probably true.

Adjourned to Saturday, May 23, 1908, at 10 o'clock A. M.

CHICAGO, May 23, 1908.

Met pursuant to adjournment. Present as before.

X-Q. 76. Isn't it a fact that the modern Burroughs wide paper machine is numbered in a series beginning 4001?

A. It is my impression that that is correct, but I have no positive knowledge of it.

X-Q. 77. I see on page 126 of the sales record book a machine numbered 6001, another numbered 6002, both sold on the 14th of January, 1898, to the Peoples Gas Light & Coke Company. Can you say what that machine is?

A. I cannot.

X-Q. 78. Turning to this sales record book, I find that the pages 153 to 166 have been cut out; is that right?

A. Yes, sir, it is.

X-Q. 79. Do you know who cut those pages out?

Deposition of Defendant's Witness, Emil P. Wenger, stipulated in from Burroughs case.

A. I do not.

X-Q. 80. Do you know when they were cut out?

A. I do not.

X-Q. 81. Do you know what was on the pages that were cut out?

A. I have no idea whatever.

X-Q. 82. Did you look at the books that succeeds in order of date the machine record journal when you got the books together to bring them here?

A. No, sir, I did not.

X-Q. 83. How did you know what books to bring?

A. This book—in fact, all these books that have been submitted in evidence, were gathered together by a clerk of the Burroughs Adding Machine Company, and not by myself.

X-Q. 84. Who gave you the instructions what to gather together?

A. Probably Mr. Rector.

X-Q. 85. Do you know the date when the Burroughs machine 4001 was sold?

A. No, sir.

X-Q. 86. Did you investigate the books with a view to find out when any of the series beginning with 4001 was sold; or do you know?

A. I do not know when the first of the machines in series 4000 were sold, nor do I remember examining the books containing the 4000 series between numbers to ascertain that information.

X-Q. 87. When did the Boyer Machine Company make the tools for the American Arithmometer Company referred to in your answer to Q. 28?

A. It was several years prior to the making of the second set of tools referred to, which were shipped to Nottingham, England, on the order of W. J. Cannon, in 1898.

X-Q. 88. How many years prior to 1898?

Deposition of Defendant's Witness, Emil P. Wenger, stipulated in from Burroughs case.

A. Perhaps four.

X-Q. 89. When did the Boyer Machine Company get through with this contract and stop making the machines for the American Arithmometer Company?

A. I am certain it was prior to 1895, in which year the Boyer Machine Company, as well as the American Arithmometer Company, removed from Dickson street to a new factory building erected on Wash street, in St. Louis.

X-Q. 90. How long was the Boyer Machine Company engaged in this work of making machines for the American Arithmometer Company?

A. I do not remember with any definiteness the period during which the machines were regularly manufactured by the Boyer Machine Company under contract for the American Arithmometer Company. All of the experimental work was done for the Arithmometer Company by Joseph Boyer and the Boyer Machine Company from, perhaps, the very beginning of Mr. Burroughs' work on the invention, which, I believe, was commenced late in 1885, or early in 1886, and I do not recall when the first regular machines were manufactured.

X-Q. 91. Was the work of manufacturing the machines on contract, any portion of it done in the year 1893?

A. I can only say that that was possible.

X-Q. 92. Do you remember when it was that the American Arithmometer Company called in all of the machines it had previously sold?

A. I do not recall that at any time all of the machines, or any substantial number, were recalled.

X-Q. 93. Don't you know, Mr. Wenger, that in 1894, the American Arithmometer Company called in all of the machines it had previously sold, at least as many of them as it could get in, and sent out to the owners new machines in exchange?

A. I do not know that a special effort was made by the

Deposition of Defendant's Witness, Emil P. Wenger, stipulated in from Burroughs case.

company to replace any large number of machines at any one time. I do recollect that out of the very first machines regularly manufactured by the Boyer Machine Company, that many of them were returned, either for repairs, adjustment, and probably in many cases to be replaced.

X-Q. 94. When was this outfit of tools that was made by the Boyer Machine Company, and used by it for a while, turned over to the American Arithmometer Company?

A. That was done prior to our removal from Dickson street to Wash street, which occurred in 1895, but how much or how long prior to that removal, I do not remember.

X-Q. 95. How many machines did the Boyer Machine Company make on this contract that you speak of?

A. On the original contract, which included the making of the complement of special tools, one hundred adding machines were also made, and subsequent to that the Boyer Machine Company made under separate contract either two or three lots of machines, approximately one hundred machines in each lot.

X-Q. 96. This was all before you moved from Dickson street?

A. Yes, sir.

X-Q. 97. How long did it take the Boyer Machine Company to make the two or three lots of approximately one hundred in each lot, that were made subsequent to the completion of the tools and the first lot?

A. It is my impression that the last of the several lots of one hundred machines manufactured were delivered or ready for delivery within about three months after the order was received.

X-Q. 98. Then, do you say that the Boyer Machine

Deposition of Defendant's Witness, Emil P. Wenger, stipulated in from Burroughs case.

Company made 300 machines, or 200 machines in three months?

A. No, the idea I meant to convey was that it took the Boyer Machine Company about three months to build the last lot of 100 adding machines that it built.

X-Q. 99. Isn't it true, Mr. Wenger, that in order to sell an adding machine to a person who has never had one, it is necessary to leave the machine on trial, and if so, for how long a trial, approximately?

A. The length of trials vary from a few days to several months, and in the early days of the business I believe it was universally the custom to leave machines for trial with prospective customers, but it is not true to the same extent at the present time.

X-Q. 100. What amount of capital has the Burroughs Company now invested in tools, machinery, material, and stock of machines now on hand which it puts out on trial?

A. I cannot give an approximate total of the several items you mention. The investment in machines in the hands of agents for trial and substitute purposes may amount to $700,000 or $800,000.

X-Q. 101. Well, give me the grand total that the Burroughs Company has invested at the present time in tools, machinery, material, and machines completed and in process of completion.

A. The total invested in raw material, completed machines, tools and work in process may be in the neighborhood of one and a quarter million.

X-Q. 102. There was a time, of course, when the American Arithmometer Company was putting out money and getting no return from it in the way of profit on the investment. I believe that is true of every manufacturing industry. Can you tell when it was that the American Arithmometer Company was first in position to declare dividends to its stockholders?

A. I think the first dividend was paid in the year 1896. Deposition of Defendant's Witness, Emil P. Wenger, stipulated in from Burroughs case.

Cross-examination closed.

Re-direct Examination by Mr. Rector.

R-D-Q. 103. Referring to cross-questions 100 and 101, what is the present capacity of the Burroughs Adding Machine Company for the production of the Burroughs adding machine?

A. When the factory is running on full time, and with a full force of employees, the average per day is about seventy machines, or a little better.

R-D-Q. 104. Referring to your answer to X-Q. 101, can you state approximately how much of the investment there referred to is in special tools for the manufacture of the Burroughs adding machines?

A. The total for the tool account, which includes both special and general tools, I believe is somewhere in the neighborhood of $175,000 to $200,000, and it is my opinion that possibly one-half of this amount is invested in special tools.

Re-direct examination closed.

Re-cross Examination by Mr. Munday.

R-X-Q. 105. What's the total amount of money that the Burroughs Adding Machine Company has invested in its business?

By Mr. RECTOR: The question is objected to as irrelevant and immaterial, and the witness is instructed that, until ordered to do so by the court, he may use his own discretion in answering or declining to answer the question.

A. I decline to answer this question unless ordered to do so by the court.

Deposition closed.

EMIL P. WENGER.

CIRCUIT COURT OF THE UNITED STATES, NORTHERN DISTRICT OF ILLINOIS, EASTERN DIVISION.

Comptograph Company, *Complainant,* vs. Burroughs Adding Machine Company, *Defendant.*	In Equity. No. 28,782.

NEW YORK, June 4, 1908, 11 A. M.

Examination of witnesses on behalf of the defendant in the above entitled cause, pursuant to the foregoing notice, before C. E. Davidson, notary public for New York County, in the State of New York, at the office of Messrs. Gifford & Bull, 141 Broadway, New York City, beginning at 11 o'clock A. M., June 4, 1908.

Present: Henry Love Clarke, Esq., of counsel for complainant; Edward Rector, Esq., of counsel for defendant.

Deposition of Defendant's Witness, John H. Wyeth, stipulated in from Burroughs case.

And thereupon JOHN H. WYETH, a witness produced on behalf of defendant, being duly sworn, deposes and says as follows, in answer to interrogatories by Mr. Rector:

Q. 1. How old are you, Mr. Wyeth, and where do you live?

A. I am 36 years old, and I live in New York.

Q. 2. And what is your occupation?

A. I am New York selling agent of the Comptograph Company of Chicago.

Q. 3. That company is the complainant in this case?

A. I believe so.

Q. 4. Where were you living and what was your occupation during the years 1897 and 1898?

A. I was the sales agent of the Burroughs Adding Machine Company in Chicago, and I lived there. The Bur-

Deposition of Defendant's Witness, John H. Wyeth, stipulated in from Burroughs case.

roughs Adding Machine Company was called the American Arithmometer Company at that time.

Q. 5. I show you what purport to be a series of original letters, written, or dictated, and signed by you, and addressed to the American Arithmometer Company, St. Louis, Mo., bearing the following dates:

August 9, 1897.
August 13, 1897.
August 18, 1897.
September 4, 1897.
September 8, 1897.
October 5, 1897.
October 9, 1897.
October 12, 1897.
October 13, 1897.
October 27, 1897.
November 13, 1897.
November 15, 1897.
November 30, 1897.
December 7, 1897.
December 8, 1897.
December 23, 1897.
January 15, 1898.
January 24, 1898.
February 5, 1898.
February 18, 1898.
March 14, 1898.
March 15, 1898.
March 23, 1898.
March 24, 1898.
June 14, 1898.
July 7, 1898.
July 9, 1898.
July 14, 1898.
July 19, 1898.
August 30, 1898.

I note that the first of said letters is addressed to E. G. Langhorne, Esq., Secretary American Arithmometer Co.; also letters dated October 9, 1897; October 12, 1897; January 15, 1898; February 5, 1898, and March 24, 1898; and that the letters dated November 15, 1897, and December

Deposition of Defendant's Witness, John H. Wyeth, stipulated in from Burroughs case.

7, 1897, were addressed to John T. Langhorne, care American Arithmometer Company; and the letter dated July 14, 1898, to J. C. Calef, Esq., care American Arithmometer Company.

Will you please examine those letters and state whether or not you recognize them as the original letters written or dictated and signed by you, and sent to the American Arithmometer Company and the several gentlemen named at the dates which the letters respectively bear?

A. They seem to be my letters. The one dated February 15, 1898, is signd by me per "F," but I think I dictated it.

Q. 6. And all the others were signed by yourself?

A. They were.

Q. 7. I suppose you have no doubt that these letters were written and mailed to the parties to whom they were addressed at about the dates which they respectively bear?

A. No, sir.

Q. 8. Certain of these letters refer to the placing on trial of a broad frame or wide paper carriage adding machine with Montgomery Ward & Co. of Chicago in August, 1897, and the subsequent sale of the machine to that concern in November, 1897, the machine being referred to as No. 1575. Do you recall the incident of the placing of that machine on trial with Montgomery Ward & Co., and its subsequent sale as stated?

Mr. CLARKE: The question is objected to insofar as it undertakes to state the contents of the letters; the letters speak for themselves as to what was or was not done with any machine or machines referred to in them.

A. I remember something about the case.

Q. 9. You remember, do you not, that such a machine was placed on trial with Montgomery Ward & Co. and sold to that concern?

Deposition of Defendant's Witness, John H. Wyeth, stipulated in from Burroughs case.

Mr. CLARKE: Objected to as leading.

A. Yes.

Q. 10. And the "broad frame" on that machine referred to in your letters was a paper carriage movable transversely across the machine to permit the printing of items in separate vertical columns side by side, was it not?

A. It was.

Q. 11. And it was a machine in which after the printing of each item in a column the paper was automatically advanced or moved upward one line space for the printing of the next item below it?

Mr. CLARKE: Objected to as leading.

A. It was.

Q. 12. And this operation occurred no matter what position the paper carriage was in transversely of the machine?

Mr. CLARKE: Same objection.

A. I don't understand the question.

Q. 13. What I mean is, the operation referred to in the previous question would occur whenever the machine was operated, whether the paper carriage was in position to print items in one column or another column across the sheet of paper?

A. Yes.

Q. 14. Were you familiar with the broad frame or wide paper carriage machines subsequently manufactured and sold in large quantities by the American Arithmometer Company, and known as the No. 3 machine of that company?

A. I was.

Q. 15. How did this machine numbered 1575, which was sold to Montgomery Ward & Co. in 1897, differ from those later No. 3 machines in respect to the printing of items in a series of vertical columns side by side?

Deposition of Defendant's Witness, John H. Wyeth, stipulated in from Burroughs case.

A. Why, the No. 3 machine, as regularly manufactured, had a great many improvements in the feeding mechanism for the paper and was made to work very much better.

Q. 16. But the general operation of machine No. 1575 in the printing of parallel vertical columns of items was the same, was it not, in the later machines referred to?

Mr. CLARKE: Objected to as leading.

A. I could not say just what the changes were mechanically. I remember the No. 1575 gave me a lot of trouble and it required considerable nursing along. I was able to keep the machine going because I had one of my own operators there who called me up on the telephone when the machine would get out of order without letting Mr. Thorne, the treasurer of Montgomery Ward & Co., know of it; but they had considerable difficulty with the paper feed.

Q. 17. You have not answered my question, as I did not ask you anything about the mechanical details of the machine, nor the amount of trouble you may have had with it. What I wish to know is, whether in the use of that machine No. 1575 to list items in a series of vertical columns side by side on a sheet of paper, the machine was operated by the clerk or operator in the same general way that the later No. 3 machines which you have referred to were operated.

Mr. CLARKE: All the introductory part of counsel's question, criticising the witness' last answer, is objected to. The said answer was obviously directly responsive to the previous question.

A. The two machines were supposed to operate just alike.

Q. 18. Machine No. 1575 was used in regular commercial work at Montgomery Ward & Company's listing

Deposition of Defendant's Witness, John H. Wyeth, stipulated in from Burroughs case.

items in parallel vertical columns, from the time it was first placed on trial there, was it not?

Mr. CLARKE: Objected to as leading.

A. It did not give continual service, no; as I remember, there was a duplicating machine there. When one machine would cause trouble, they would use the other one, and so much so that the carriage on 1575 was later replaced by another carriage.

Q. 19. But the use which was made of machine No. 1575 at Montgomery Ward & Company's was used in the regular commercial work of the house, the same as they used any other adding machine?

Mr. CLARKE: Objected to as leading.

A. Yes; but it was far from being a satisfactory machine. It was so great an improvement on the duplicating device that we had, or on the No. 1 machine, that they would put up with it, and later the machine was changed for one of the standard construction.

Q. 20. I quote the following from your letter of September 4, 1897, to the American Arithmometer Company:

> "The machine with the broad frame has been running for some weeks at Montgomery Ward & Co.'s and they speak very highly of it, and Mr. Thorne prefers it to the Standard Carriage machine, inasmuch as he can file his records in much better shape. The device has given very good satisfaction, but requires some attention from the operator, and I believe there are some points about it which might be improved."

Were those statements of your letter correct?

A. They were. You will also find some later references to that machine wherein I outlined the trouble as I saw it.

Q. 21. Yes, and some of your later letters show that the machine was returned to the factory at St. Louis

Deposition of Defendant's Witness, John H. Wyeth, stipulated in from Burroughs case.

for some repair or adjustment, and in that connection I call your attention to the following extract from your letter of October 12, 1897:

> "Messrs. Montgomery Ward & Company prefer this machine particularly, and wish it returned as soon as possible, so I would request your prompt attention."

The fact was as stated in this letter, I suppose?

> Mr. CLARKE: The introductory clause of the question, which undertakes to state the substance of some of the letters, is objected to; the letters speak for themselves as to what they contain.

A. Yes; Montgomery Ward & Company preferred this machine to a standard machine or a machine with a narrow carriage, and wished it returned to them as soon as possible.

Q. 22. I quote the following from your letter of November 15, 1897:

> "I had a talk today with Mr. Thorne of Montgomery Ward & Company's, and he does not want to give up the broad frame; and as he says he will soon need a second machine, I do not like to insist on taking the broad frame away from him."

The "broad frame" machine there referred to was the machine No. 1575 which we have been talking about, was it not?

A. It was.

Q. 23. And the fact that Mr. Thorne liked the machine so well that he was not willing to have you take it away?

A. I think I said that Mr. Thorne liked the machine and did not wish it taken away, and was willing to put up with it until he could get something better.

Q. 24. And fifteen days later he actually bought the machine, as stated in your letter of November 30, 1897, did he not?

A. Yes.

Deposition of Defendant's Witness, John H. Wyeth, stipulated in from Burroughs case.

Q. 25. And paid for it on or before December 8, 1897, at which date you stated in your letter to the American Arithmometer Company:

"Enclosed please find my check for $250.00 payment machine No. 1575 with broad frame sold to Montgomery Ward & Co. this City, guarantee dated November 30th, 1897."

A. Yes.

Q. 26. What price did Montgomery Ward & Co. pay for this machine No. 1575?

A. They paid the same price, $375, as the No. 1 machine.

Q. 27. And that was also the regular price for the No. 3 machines, to which we have referred?

A. Yes, sir.

Q. 28. And the difference between that price and your remittance of $250 was the regular agent's commission on the sales of the machines?

A. It was.

Q. 29. Do you remember how long machine No. 1575 remained in use at Montgomery Ward & Company's before the new or improved paper carriage to which you have referred was placed on it?

A. Until January 6, 1899.

Q. 30. At the latter date the American Arithmometer Company was regularly manufacturing the No. 3 machines in quantities for the market, was it not?

A. Yes, sir.

Q. 31. Some of your letters, Mr. Wyeth, refer to the sale of a broad-frame machine to the National Bank of the Republic at Chicago in the early part of the year 1898. Do you recall that machine?

A. Yes, sir.

Q. 32. How did it differ, if at all, so far as you remem-

Deposition of Defendant's Witness, John H. Wyeth, stipulated in from Burroughs case.

ber, from machine No. 1575, which was sold to Montgomery Ward & Co.?

A. I do not recall the specific differences. It was substantially the same machine.

Q. 33. In your letter of February 18, 1898, to the American Arithmometer Company, you say:

"Have sold the Broad Frame machine to the Nat. Bk. of the Republic."

That was the fact, was it not?

A. They paid for the machine, yes.

Q. 34. And the machine had been delivered to the bank and put in use prior to that date, had it not?

Mr. CLARKE: Objected to as leading.

A. Yes. They bought the machine with the understanding, either verbal or written, that the broad paper carriage should be replaced at a later date.

Q. 35. In your letter of March 14, 1898, you state that you enclose remittances for a number of machines, including:

"Broad Frame Machine No. 1951
Sold to The National Bank of the Republic, Chicago, Ills.

Guarantee dated March 1st, 1898. $250.00."

This machine No. 1951 was the same machine as that referred to in your previous letter of February 18, 1898, as having been sold to the National Bank of the Republic?

A. It was, yes.

Q. 36. That machine was placed in regular commercial use in the bank at the time it was originally delivered to the bank, was it not?

Mr. CLARKE: Objected to as leading.

A. It was.

Q. 37. Some of your later letters, beginning with that dated July 7, 1898, refer to the receipt of additional broad frame machines from the American Arithmometer

Deposition of Defendant's Witness, John H. Wyeth, stipulated in from Burroughs case.

Company, the first of said machines being referred to as No. 4001. Those machines, beginning with No. 4001, were the regular No. 3 machines which the company had then begun to make in quantities for the market, were they not?

A. Yes, sir.

Q. 38. In your letter of November 15, 1897, you say:

"I am working on the new Catalogue and will send you my 'copy' in a day or two."

And in your letter of December 7th you refer further and at length to such catalogue, and say:

"I have prepared a full description and elaborated upon the broad frame, and will also mention the smaller machine."

Do you recall your preparation of or work upon the catalogue there mentioned?

A. I do, very well.

Mr. CLARKE: The quotation in the question is objected to as not completely quoting the paragraph or the matter to which it refers.

The WITNESS (continues): I had been asked, as I presume the other representatives of the company were, to prepare a kind of prospectus of this broad-frame machine, and this letter was in reference to that request.

Q. 39. Was that catalogue published?

A. I don't think it ever was; not until a long time afterwards, if at all; and certainly not in the original form to which this letter refers.

Q. 40. It appears from some letters which have heretofore been introduced in evidence in this case, that in March, 1897, a broad frame or wide paper carriage adding machine was sent to Chicago by the American Arithmometer Company, addressed to Joseph Boyer, at the office of Mr. Duntley, and that on or about April 5, 1897, the company wrote you, requesting you to call on Mr. Rector and make an appointment to bring that machine to

Deposition of Defendant's Witness, John H. Wyeth, stipulated in from Burroughs case.

Mr. Rector's office and explain it to him in connection with an application for a patent which he was to prepare. Do you recall that incident?

A. Yes, sir.

Q. 41. And you did have that machine delivered to Mr. Rector's office and explained it to him?

A. As I remember the circumstances, the machine was already at your office, and I called there, but you were too busy, I think, to take the matter up with me at that time. Some days later I called at your office again and found your draftsman had taken the machine down and you were at work on the patent, but I did not see the machine complete and operating.

Q. 42. Do you remember whether or not that machine was turned over to you by Mr. Rector subsequently, and returned by you to the Arithmometer Company?

A. No, that machine was not returned to my office. As I recollect the matter, upon receipt of a telephone message that you were through with the machine, I either went over to your office myself or sent some one over to have the machine packed up and shipped—to the factory, presumably.

Q. 43. It further appears from evidence heretofore introduced in this case that on or about May 20, 1897, the American Arithmometer Company shipped a second broad-frame machine to Chicago, addressed to Wyeth & Langhorne, to be used or referred to by Mr. Rector in connection with the preparation of the same patent application. Do you remember that machine?

A. Yes, sir.

Q. 44. Do you recall the number of the machine?

A. I think it is No. 1540.

Q. 45. How did that machine resemble or differ from the machine No. 1575 which you placed in Montgomery Ward & Co. a little later?

Deposition of Defendant's Witness, John H. Wyeth, stipulated in from Burroughs case.

A. As to the exact differences I cannot state. This machine never was placed on trial by me and was returned to the factory in a few weeks.

Q. 46. But it was a broad frame or wide paper carriage adding machine of the same general character as the machine No. 1575, and the later No. 3 machines?

Mr. CLARKE: Objected to as leading.

A. If you will leave out "and the later No. 3 machines" I can answer yes. But there was quite a difference between this machine and the later No. 3 regularly manufactured.

Q. 47. But they were all intended and adapted to do the same kind of work, were they not; that is to say, the listing of items in vertical columns side by side on a sheet of paper?

Mr. CLARKE: Objected to as leading.

A. Yes, sir.

Mr. RECTOR: Defendant's counsel offers in evidence the letters submitted to and identified by the witness and asks that they be marked collectively "Defendant's Exhibit Wyeth Letters."

Direct examination closed.

Cross-Examination by Mr. Clarke.

X-Q. 48. Mr. Wyeth, are you a stockholder of the defendant Burroughs Adding Machine Company, who has called you as a witness in this case?

A. Yes, sir.

X-Q. 49. About how much stock of the Burroughs Adding Machine Company do you own?

A. I own a number of thousands dollars' worth.

X-Q. 50. Can you not state the extent of your interest somewhat more definitely, or at least as being upwards of some more definite figure?

Deposition of Defendant's Witness, John H. Wyeth, stipulated in from Burroughs case.

A. About $75,000.

Recess.

X-Q. 51. What became of the machine 1951 after you had sold it, as you say, to the National Bank of the Republic?

A. They used it until it was changed for another one.

X-Q. 52. What was it exchanged for and when was it exchanged?

A. It was exchanged on December 10, 1898, for the reason that we had been just nursing it along and it was exchanged for a machine of regular manufacture.

X-Q. 53. You mean it was exchanged for a manufactured broad-frame machine?

A. Yes. It never had been satisfactory. It was in a way a makeshift to tide them over until we could deliver this regular manufactured machine.

X-Q. 54. Do you know the number of the manufactured machine that you say replaced it?

A. 4004.

X-Q. 55. To what have you referred to refresh your recollection as to the date of this replacement and the number of the machine that replaced No. 1951?

A. A copy of the sales I made while in Chicago, showing the number, date of guarantee, firms to whom sold, and which also contains a few marginal notes about these early machines. As I have it, it also shows the machines sold by my office outside of the City of Chicago.

X-Q. 56. Have you any printed or memorandum matter that shows the first date of manufacture of broad-frame machines by the Burroughs Company, and if so, will you please produce it?

A. Their "Decision Book," which was issued for the guidance of the later agents, shows the various dates of manufacture. At the time I left the company I knew I would be required to give up my Decision Book, and

Deposition of Defendant's Witness, John H. Wyeth, stipulated in from Burroughs case.

I had a copy made of it, which I here produce. On page 2, machine 4001 was manufactured July 6, 1898.

X-Q. 57. Was that the beginning of the series of broad-frame machines, the 4000 series?

A. Yes, sir; 4001 began the Broad-Frame Series, or No. 3 machines.

X-Q. 58. I note that the entry to which you refer on page 2 of this copy occurs under the heading "Dates of Manufacture" and under the sub-heading "No. 3 Machine." Do you find in this same Decision Book any matter explaining that No. 3 machines were broad-framed machines, and in that respect differed from "No. 1 machines" listed under the preceding sub-heading, and which were roll-paper machines, and if so, on what page of said Decision Book do you find such explanation?

A. On the first page of the section marked "Price List of Burroughs Adding and Listing Machines," effective October 1, 1906.

Mr. RECTOR: I should be glad to stipulate on the record, if counsel desires it, that all of the No. 1 machines manufactured by the American Arithmometer Company were roll-paper machines; that all of the No. 3 machines were broad-frame or wide-paper machines, and that the numbering of the first No. 3 machines regularly manufactured for the market began with No. 4001, and continued through the 4000 and 5000 series.

Mr. CLARKE: The stipulation hardly seems necessary, as the records speak quite fully for themselves in regard to these matters.

Counsel for complainant offers in evidence the copy of the Decision Book of the Burroughs Compan produced by the witness and asks that the same be marked "Complainant's Exhibit Copy of Burroughs Decision Book," and also asks that the notary here copy into the record the matter under the headings "Style and Serial Numbers" and "Dates of Manufacture" on pages 1 to 3; and also the first two paragraphs on the other page to which the wit-

Deposition of Defendant's Witness, John H. Wyeth, stipulated in from Burroughs case.

ness referred, being the first page of the "Price List" division of the copy of the book.

[Copy from Burroughs' Decision Book.]

[Page 1]:

"STYLE AND SERIAL NUMBERS.

Serial Nos.	*Style Nos.*
1 to 2300	1
4001 to 5999	3
6000 to 7999	4
8000 to 17999	3
20000 to 24999	3
25001 to 25999	specials
26000 to 34500	No. 3
35000 to 35999	No. 9 electric
36000 to 37500	No. 3
50000	5
60000 to 61999	4
62000 to 62999	4
63000 to 63999	4
65000	No. 7 electric
70001 to 74999	13
75000 to 75500	15

DATES OF MANUFACTURE.

NO. 1 MACHINES.

Serial Nos.	*Date Mfg.*
500	"Dec. 13, 1895.
1000	"Apr. 1, 1896
1500	"Mar. 6, 1897
2000	"Mar. 14, 1898
2254	"June 30, 1898

"Approximate.

NO. 3 MACHINES

Serial Nos.	*Date Mfg.*
2255 to 4000	none made
4001	July 6, 1898
4500	May 10, 1899
5000	Dec. 9, 1899
5500	May 21, 1900

Deposition of Defendant's Witness, John H. Wyeth, stipulated in from Burroughs case.

Serial Nos.	*Date Mfg.*
5999	Sept. 24, 1900
6001 to 7999	are No. 4's
8001	Sept. 24, 1900
8500	Jan. 9, 1901
9000	April 20, 1901
9500	July 17, 1901
10000	Oct. 8, 1901
10500	Jan. 1, 1902
11000	Feb. 24, 1902
11500	Apr. 18, 1902
12000	June 13, 1902
12500	Sept. 22, 1902
13000	Oct. 21, 1902
13500	Dec. 22, 1902
14000	Feb. 5, 1903
14500	Mar. 12, 1903
15000	Apr. 20, 1903
15500	June 6, 1903
16000	July 24, 1903
16500	Sept. 1, 1903
17000	Oct. 3, 1903
17375	Oct. 1, 1903
17376 to 20000	none made
20001	July 30, 1903
20500	Nov. 16, 1903
21000	Dec. 23, 1903
21500	Feb. 1, 1904
22000	Mar. 10, 1904
22500	Apr. 26, 1904
23000	May 6, 1904
23500	June 10, 1904
24000	July 11, 1904
24500	Aug. 10, 1904
25000 series, Special	
26000	Sept. 13, 1904
26500	Nov. 18, 1904
27000	Jan. 6, 1905
27500	Feb. 15, 1905
28000	Mar. 14, 1905
28500	Apr. 13, 1905
29000	May 19, 1905
29500	June 5, 1905
30000	July 7, 1905
30500	Aug. 15, 1905

Deposition of Defendant's Witness, John H. Wyeth, stipulated in from Burroughs case.

Serial Nos.	*Date Mfg.*
31500	Sept. 1, 1905
32000	Oct. 1, 1905
32500	Oct. 25, 1905
33000	Nov. 11, 1905
33500	Dec. 6, 1905
34000	Jan. 5, 1906
34500	Jan. 23, 1906
35000	No. 9 electric
35500	No. 9 electric
36000	Feb. 20, 1906
36500	Mar. 22, 1906
37000	Apr. 4, 1906
37500	Apr. 28, 1906
NO. 4 MACHINES.	
6001	Jan. 8, 1898
6500	Mar. 5, 1900
7000	Oct. 31, 1901
7500	Nov. 29, 1902
7999	Apr. 24, 1903
60001	Apr. 24, 1903
60500	Nov. 27, 1903
61000	May 16, 1904
61500	Sept. 14, 1904
62000	June 2, 1905
62500	Sept. 11, 1905
63000	Jan. 29, 1906
63477	Apr. 25, 1906
NO. 7 ELECTRIC MACHINES.	
65001	Nov. 7, 1905
63101	May 8, 1906
NO. 9 ELECTRIC MACHINES.	
35001	Aug. 7, 1905
35155	Jan. 8, 1906
35500	Apr. 20, 1906
NO. 13 MACHINES.	
70001	Oct. 9, 1905
70132	Apr. 26, 1906
NO. 15 MACHINES.	
75001	May 3, 1905
75054	Jan. 18, 1906
75170	Apr. 30, 1906

Deposition of Defendant's Witness, John H. Wyeth, stipulated in from Burroughs case.

No. 1. Has an adding capacity of 999999999, being punctuated as desired. Total key, correction key and a repeat key, separate column release keys, printing frame for roll paper only. Electric drive cannot be attached at present to this style of machine. Price $350.00

No. 3. Has an adding capacity of 999999999, being punctuated as desired. Total key correction key and a repeat key, separate column release keys, and a 10½″ carriage, but will be equipped with a 12¼″ carriage when so ordered. Electric drive cannot be attached at present to this style of machine.
Price .....$375.00''

X-Q. 59. Have you the original of the Burroughs Company ''Decision Book'' from which this copy was made?

A. No, sir; I gave it up when I left the company.

Mr. CLARKE: Counsel for complainant asks counsel for defendant if he will endeavor to procure and permit to be offered in evidence one of the original printed copies of this ''Decision Book'' issued by the defendant company?

Mr. RECTOR: No; but I offer no objection to your introduction of the copy which the witness has produced, and I will stipulate, if you desire, that the matter which you have had copied into the record is a correct copy of corresponding matter appearing in the ''Decision Book'' inquired about. I have never seen such ''Decision Book,'' and should prefer not to encumber the record with it.

X-Q. 60. When the Montgomery Ward machine No. 1575 was equipped with a new wide-carriage mechanism subsequently to July, 1898, was such new mechanism like that of the manufactured broad-framed Burroughs machine of the 4000 series?

A. Yes, sir; one of the new broad frames was placed on the old machine and the machine returned to Montgomery Ward & Co.

X-Q. 61. Before such replacement how had the said

Deposition of Defendant's Witness, John H. Wyeth, stipulated in from Burroughs case.

machine, equipped with what you have called the "makeshift" broad frame, behaved in use, or attempted use?

A. It had behaved quite badly. It was not a satisfactory machine; nobody thought that it was a satisfactory machine; everyone, including the company, myself and Mr. Thorne knew that the machine was to be replaced; that it was only there temporarily; but the fact that I had my own operator there enabled me to keep the machine going. It was an improvement, of course, over the No. 1 machine, but I do not believe the company ever intended to sell it as a permanent machine, but it was allowed to remain there because it was the best we had, and as I said before, by giving the machine repeated attention we kept it going. There were faults in the mechanism that we all understood and appreciated.

X-Q. 62. What was the matter with the way it worked?

A. I should say that the principal objection to the machine lay in the fact that it did not feed the paper properly. The paper would roll up after an amount was printed and roll right back again, so the next amount would appear very nearly on the same line; that is, the amounts would be printed over each other.

X-Q. 63. Was there any such fault in the old roll paper or No. 1 machine?

A. No, that was fed by an entirely different principle and in a different manner.

X-Q. 64. What did you mean by referring to the makeshift broad frame as an "improvement" on the No. 1 roll-paper machine?

A. The No. 1 roll-paper machine printed the results in a continuous strip of paper, which was very unhandy to file away, and the improvement printed a number of parallel columns on the same sheet, thereby producing its records in very much better shape. Every one was clam-

Deposition of Defendant's Witness, John H. Wyeth, stipulated in from Burroughs case.

oring for such a machine, and this machine more nearly answered the purpose than the No. 1.

X-Q. 65. That is, it was intended to print parallel columns on a sheet of paper instead of a continuous list on a roll of paper?

A. That is it exactly.

X-Q. 66. But when the sheet of paper didn't feed the result was not accomplished?

A. Certainly not.

X-Q. 67. How does what you have said regarding the behavior of the Montgomery Ward make-shift broad-frame machine apply to behavior of the No. 1951 machine that was equipped with a broad frame and furnished to the National Bank of the Republic?

A. The two cases were practically the same. I had my operator—at least an operator that I had furnished to the National Bank of the Republic there—and she would fix up the machine just as long as she could and then send for me, and I would attempt to doctor up the machine. Having these operators I think was my salvation, as they unquestionably helped in no small degree to keep the machines going, and if it were not for them I doubt whether the machine would have ever been sold. The machine was used at the National Bank of the Republic for putting up the clearing-house work, that had to be done by a certain time, so that I doubt if the bank would have put up with the annoyance the machine occasioned if it had not been for these operators.

X-Q. 68. In one of your letters you speak of the need of another set of rubber rollers below the platen to make the paper feed properly. Are such rollers in the present manufactured broad-frame Burroughs machines?

A. I cannot say as to the present manufacture, but the machines furnished the National Bank of the Republic and Montgomery Ward & Company had two sets

Deposition of Defendant's Witness, John H. Wyeth, stipulated in from Burroughs case.

of friction rollers on, as did all the No. 3 machines. I mean the later machines of 4004 and 1575 after it was fixed over.

X-Q. 69. Is such second set of rollers shown in either the machine illustrated in the first five sheets of the Pike patent 595,864, or the modification shown on the sixth sheet of said patent, of which I show you here a copy?

A. No, sir.

X-Q. 70. And were various other changes made in producing the manufactured broad-frame machines as compared with the several make-shift broad-frame mechanisms that were put on the several No. 1 machines that you have mentioned by number in your testimony?

A. Yes, the construction used is not like any of the drawings.

X-Q. 71. Did you ever see or handle any Burroughs machines numbered 1549 or 1551?

A. I don't think I ever did.

X-Q. 72. Do you happen to know who W. J. Cannon, of Lincoln, England, was?

A. I know in a general way that he was a stockholder and one of the original promoters of the company that bought the foreign patents of the American Arithmometer Company.

X-Q. 73. Did you ever know anything more of the machines Nos. 1184 and 1540 after they were, as you have testified, sent back to the factory?

A. No, sir. I only had the two machines for trial in my territory, Nos. 1575 and 1951.

Cross-examination closed.

Re-Direct Examination by Mr. Rector.

R-D. Q. 74. Mr. Wyeth, what was the name of your operator at Montgomery Ward & Company?

A. I think her name was Miss Honan.

Deposition of Defendant's Witness, John H. Wyeth, stipulated in from Burroughs case.

R-D. Q. 75. Do you remember her first name?

A. I don't know if I ever heard it.

R-D. Q. 76. Who paid her salary or wages during the time she was operating the machine No. 1575?

A. Montgomery Ward & Company was willing to pay a certain amount, but I made up the difference. I believe I paid her $2 a week.

R-D. Q. 77. How long did she continue in charge of machine No. 1575?

A. I couldn't say exactly; to the best of my recollection she was with Montgomery Ward & Company over a year. I don't remember her leaving there.

R-D. Q. 78. Who were your operators at the National Bank of the Republic?

A. A Miss Helen Foley, and I also placed a Miss Clara Burbleu there.

R-D. Q. 79. And who paid them?

A. The National Bank of the Republic.

R-D. Q. 80. According to the data in the copy of the Burroughs Decision Book which you have produced and referred to on your cross-examination, machines Nos. 4001 to 5999, inclusive, were all No. 3 machines. Do you remember that to have been the fact?

A. I do not remember that there was 2,000 machines manufactured, but I do know every No. 3 machine was numbered from 4001 to 5999, and the numbers from 6000 to 8000 were reserved for the No. 4 or 6-bank machines which worked only on roll paper.

R-D. Q. 81. But all the machines which were manufactured and numbered in the 4000 and 5000 series from 4001 to 5999—whatever number of them there may have been—were No. 3 machines, were they not?

A. All that I ever saw were No. 3 machines.

R-D. Q. 82. I believe you stated in your cross-examination that you had here before you a list of all the Bur-

Deposition of Defendant's Witness, John H. Wyeth, stipulated in from Burroughs case.

roughs machines sold by you while you were with that company, including its predecessor, the American Arithmometer Company?

A. The list shows every machine I sold as the Chicago agent.

R-D. Q. 83. In what territory?

A. In what was known as "Chicago office territory."

R-D. Q. 84. Can you ascertain from that list how many No. 3 Burroughs machines you sold in that territory during the years 1898, 1899 and 1900?

A. I can dig them out, I suppose. They are all shown there. I kept the records of each machine on a separate card and this list will only show the last entry on any one card.

R-D. Q. 85. Will you please ascertain from that list and state how many No. 3 machines you sold in that territory during those three years?

A. 1898.....16
1899.....36
1900.....45

Total.....97

R-D. Q. 86. And all of those No. 3 machines were of course broad-frame or wide-paper machines, such as we have been discussing?

A. Every No. 3 machine was a wide-paper machine.

R-D. Q. 87. In each of the wide-paper carriage machines which have been mentioned in your testimony, including machines 1575 and 1951, it was possible to print the total of the first column of items at the foot of the column and carry it forward and print it at the top of the second column, and so on in all of the columns printed, was it not?

A. Certainly.

R-D. Q. 88. Mr. Wyeth, in what way, if at all, are you

related to Mr. H. B. Wyeth, the general manager of the complainant company, who is here present?

Deposition of Defendant's Witness, John H. Wyeth, stipulated in from Burroughs case.

A. I am his brother.

Re-Cross Examination by Mr. Clarke.

R-X. Q. 89. The first item under the head of "Dates of manufacture" in the copy of the Burroughs Decision Book is the 500 series of No. 1 machines, for which "December 13, 1895" is given as the date of manufacture. Were there any machines of lower serial number than 500, and if so, about how many and what became of them?

A. There were unquestionably machines numbered below 500, but they were not supposed to be merchantable machines; they were supposed to have been rebuilt. There were some few of them that were left with the original purchasers that did not cause any trouble to speak of, that were not rebuilt until a much later day.

R-X Q. 90. And what became of most of them?

A. I never personally came in contact with very many of them, so I really don't know what became of them.

R-X Q. 91. Do you know what the Burroughs Company did with the machines it had made of lower serial number than the 500 series?

A. They called them in and rebuilt them.

R-X Q. 92. About how many machines did the Burroughs Company make in each of the years 1895 and 1896?

A. I should say approximately they made three to four hundred in 1895 and something about like some 800 to 1,000 in 1896.

R-X Q. 93. What was the first Burroughs machine you ever saw with any kind of a broad frame mechanism put on it?

A. It was No. 1184, that I saw in Mr. Rector's office in Chicago.

Examination of witness closed.

JOHN H. WYETH.

Deposition of Defendant's Witness, Edmund G. Langhorne, stipulated in from Burroughs case.

EDMUND G. LANGHORNE, a witness produced on behalf of defendant, being duly sworn, deposes and says as follows, in answer to interrogatories by Mr. Rector:

Q. 1. What is your age, Mr. Langhorne, and where do you live?

A. I am 47 years old and live at East Orange, New Jersey.

Q. 2. What is your occupation?

A. Manufacturer of adding machines.

Q. 3. With what company?

A. The Pike Adding Machine Company, of Orange, N. J.

Q. 4. What is your position with that company?

A. President and general manager.

Q. 5. Where were you living, and what was your occupation, during the years 1895 to 1900, inclusive?

A. I was living in St. Louis, Missouri. I was general manager and secretary of the American Arithmometer Company, of St. Louis.

Q. 6. Were you familiar with the adding machines manufactured by the American Arithmometer Company during those years?

A. I was.

Q. 7. Under whose direction were those machines manufactured?

A. Under my direction.

Q. 8. Did that company during those years manufacture any adding machines equipped with wide paper carriages mounted to move back and forth across the machine to enable items added upon the machine to be listed in separate vertical columns side by side upon a sheet of paper?

A. Yes.

Q. 9. When did that company first manufacture such

Deposition of Defendant's Witness, Edmund G. Langhorne, stipulated in from Burroughs case.

machines in any considerable numbers, and in a regular way for the market?

A. They began the regular manufacture in the latter part of 1898.

Q. 10. Do you mean 1898?

A. No, I mean 1897.

Q. 11. And when were the first of those machines which were regularly manufactured in commercial quantities ready for the market?

A. In the early part of 1898.

Q. 12. By what trade number or designation were those wide-paper carriage adding machines known?

A. We started them by serial number 4001.

Q. 13. Was there any general designating number applied to all those machines?

A. They were designated as "Style No. 3."

Q. 14. Were those No. 3 machines, beginning with machine No. 4001, regular tool-made machines, or were they partly or wholly hand-made machines?

A. They were practically tool-made machines.

Q. 15. What sort of an equippment of tools for their manufacture did the American Arithmometer Company provide—with especial reference to the wide paper carriage of the machines?

A. They provided a complement of tools for the manufacture.

Q. 16. Where were those tools made and when were they made?

A. They were made in the company's factory, 21st and Wash streets, St. Louis, Missouri. Their manufacture was commenced in 1897 and completed in the early part of 1898.

Q. 17. Do you recall how many of the No. 3 wide-paper carriage machines were manufactured in the first lot made from or with these tools?

Deposition of Defendant's Witness, Edmund G. Langhorne, stipulated in from Burroughs case.

A. I am not positive whether it was twenty-five or fifty.

Q. 18. Do you remember how many such machines were manufactured from those tools in 1898?

A. I don't remember the number, but practically all the machines which were manufactured had the broad carriage.

Q. 19. You have stated that the first regular No. 3 machine was given serial number 4001. How far did that series of numbers for those machines continue?

A. There were 2000 numbers set aside for that style of machine.

Q. 20. And those numbers were 4001 to 5999, inclusive, were they?

A. 4001 to 5999, inclusive.

Q. 21. Do you remember how many No. 3 machines bearing numbers within those limits were actually manufactured and sold?

A. I should say all of them.

Q. 22. That is to say, 2000, as I understand you?

A. 2000.

Q. 23. What machines were given the numbers immediately following 5999?

A. The machines known as "Style No. 4."

Q. 24. And what were they?

A. They were machines for using roll paper, of a smaller character than the No. 3 machines.

Q. 25. How many numbers, following 5999, were assigned to these No. 4 machines?

A. My recollection is that 2000 numbers, beginning with 6000 and ending with 7999—about those figures, 2000 in all.

Q. 26. And to what machines, if any, were the numbers following 7999 assigned?

A. The Style No. 3 began again with 8000.

Deposition of Defendant's Witness, Edmund G. Langhorne, stipulated in from Burroughs case.

Q. 27. To what extent did the American Arithmometer Company manufacture and sell these No. 3 machines while you were connected with the company?

A. After the manufacture of the No. 3 machine was commenced a large majority of the machines manufactured were No. 3's.

Q. 28. All of the No. 3 machines, as I understand you, were wide paper machines of the character inquired about at the beginning of your examination?

A. All No. 3 machines were equipped with a wide carriage.

Q. 29. Did the American Arithmometer Company ever build any wide paper carriage adding machines, for the listing of items in parallel vertical columns, prior to its regular manufacture of the No. 3 machines with the equipment of tools provided for the latter machine?

A. Yes.

Q. 30. Were any such machines built by the company during the year 1897?

A. Yes, several.

Q. 31. Do you recall how many?

A. There were six or seven built in the spring and summer of 1897.

Q. 32. Do you remember what was done with those wide-paper carriage machines which the company manufactured in the year 1897?

A. One of them was shipped to W. J. Cannon, Lincoln, England; one of them sold to the St. Louis Trust Company; the others were placed in service; as to just where they were sold I don't recall the specific places.

Q. 33. What personal knowledge did you have of the machine which you say was sent to W. J. Cannon at Lincoln, England, and when was it sent to him?

A. The machine was shipped from America on April

Deposition of Defendant's Witness, Edmund G. Langhorne, stipulated in from Burroughs case.

15, 1897, addressed to myself at London, England, for account of W. J. Cannon.

Q. 34. Were you in London at that time?

A. I was.

Q. 35. And did you receive the machine there?

A. Yes, the machine was delivered to me there and I exhibited it and used it in the sale of the foreign patents on the Burroughs machine owned by the American Arithmometer Company.

Q. 36. Did you operate the machine or see it operated upon it reecipt by you in London?

A. I personally operated and exhibited it.

Q. 37. What sort of work did you do on it?

A. I did column work; a plurality of columns on a sheet; running down one column and reversing the paper and making other similar columns.

Q. 38. How did this machine resemble or differ from the No. 3 machines subsequently regularly manufactured by the American Arithmometer Company, insofar as the general operation and mode of use were concerned?

A. It was of the same general mechanical construction practically, and it did the same work as the machines of later manufacture.

Q. 39. Do you recall when it was that you received this machine at London—how long after its shipment from America?

A. My recollection is it was the first week in May, 1897.

Q. 40. What did you do with the machine, or with whom did you leave it, when you returned to America?

A. It was billed to Mr. W. J. Cannon, and I left it with him as his property.

Q. 41. Did Mr. Cannon or his company pay for the machine, either then or subsequently?

Deposition of Defendant's Witness, Edmund G. Langhorne, stipulated in from Burroughs case.

A. My recollection is he did pay for it as it was regularly billed.

Q. 42. Did you ever see that machine again, after your return to America?

A. No, I have never seen the machine since.

Q. 43. Do you recall when it was that you went to England—when you left America—on the occasion referred to?

A. I left St. Louis about the 19th of March, and sailed from here about the 21st, I think.

Q. 44. It appears from evidence heretofore introduced in this case that the American Arithmometer Company sent a wide paper carriage adding machine to Chicago, on or about March 23, 1897, for use in connection with the preparation of the application for a patent. Do you remember whether you saw that machine at St. Louis prior to your trip to England in that month?

A. Yes, I think I saw that machine some time before that.

Q. 45. Do you recall when and where you first saw any wide paper carriage Burroughs adding machine, after your return from England?

A. In the factory of the company.

Q. 46. It appears from evidence heretofore introduced in this case that a Burroughs broad frame or wide paper carriage adding machine, known as No. 1551, was shipped to New York to you on or about May 19, 1897. Do you recall whether you had returned from England at that time and what the occasion of sending such machine to you at New York was?

A. I returned about that time, and the machine was no doubt sent to me to exhibit. I am not, however, quite clear about it. It was, if received, delivered at the office, 202 Broadway.

Q. 47. Who was the New York agent of the American Arithmometer Company at that time?

Deposition of Defendant's Witness, Edmund G. Langhorne, stipulated in from Burroughs case.

A. Mr. Walter B. Manny, represented the company at that time in the eastern territory.

Q. 48. Have you any recollection of having exhibited the wide paper carriage Burroughs machine to Mr. Manny, or having examined such machine with him, soon after your return from England?

A. I have an indistinct recollection of it.

Q. 49. Do you know where Mr. Manny is now?

A. The last information I had from him he was in Carlsbad, Germany.

Q. 50. I show you what purports to be four original letters signed by Walter B. Manny, dated at New York, February 27, 1897, June 17, 1897, January 6, 1898, and June 6, 1898, and addressed to "Mr. E. G. Langhorne, Secy., St. Louis, Mo." Will you please state whether or not you recognize those letters, and if so, what they are?

A. I recognize the signature to be that of Mr. Walter B. Manny, and I think I can recall the contents of the letters, except the one of June 17, 1897, which I think—in fact, I knew—must have been written before my return from Europe.

Q. 51. Do you recognize the letter-heads upon which these letters are written?

A. I do; they are the regular letter-head of the eastern sales agent, Mr. Walter B. Manny, representing the American Arithmometer Company.

Q. 52. I quote the following from the letter of February 27, 1897:

> "Sample wide carriage, 5 column work received. This machine will have great value. $400.00 is to my mind all right as to price. I want to be able to show this machine and take orders for it next July at the Convention of New York State Bankers, which is about as important event as the American Bankers Assn."

Deposition of Defendant's Witness, Edmund G. Langhorne, stipulated in from Burroughs case.

Do you recall what the "Sample wide carriage, 5 column work," mentioned in this letter, was?

A. It was a sample or work from a sliding carriage machine which was built in the latter part of 1896 and the first part of 1897.

Q. 53. By "sliding carriage" machine, do you refer to the same sort of machine as the broad frame or wide paper carriage machines which you have been referring to?

A. I refer to the broad frame, wide carriage, laterally shifting, as in use at present.

Q. 54. I quote the following from Mr. Manny's letter of June 17, 1897:

> "Will return the wide carriage machine tomorrow by freight."

Do you recall what machine that was?

A. That refers to a broad frame, shift carriage machine which was manufactured by the American Arithmometer Company.

Q. 55. At the bottom of this letter of June 17, 1897, there appears in blue pencil the notation "6/19/97." Do you know in whose handwriting it is?

A. I recognize it as being in my handwriting.

Q. 56. Does that notation serve to refresh your memory as to whether or not you personally received this letter at St. Louis?

A. It is my mark indicating that I replied to the letter. Indicating that it was replied to on that date by myself.

Q. 57. Does the reference in this letter to the return of the wide paper carriage machine to St. Louis serve to refresh your recollection as to the occasion of sending such machine to New York, or as to the use which was made of it in New York?

A. I don't recall the exact circumstances of its being

Deposition of Defendant's Witness, Edmund G. Langhorne, stipulated in from Burroughs case.

sent, but will say that it was sent for the purpose of having Mr. Manny inspect it.

By Mr. RECTOR: I offer in evidence the four Walter B. Manny letters identified by the witness and ask to have them marked "Defendant's Exhibit Manny Letters."

Q. 58. Are you familiar with the handwriting of W. J. Cannon, to or for whom the broad frame machine was shipped to England, in April, 1897?

A. Yes, I know his handwriting.

Q. 59. I hand you what purports to be an original letter written and signed by W. J. Cannon, dated London, Feb. 24, 1897, and addressed to The American Arithmometer Company, St. Louis, and having attached to it what purports to be a letter press copy of a reply to said letter by the American Arithmometer Company, dated March 6, 1897. Will you please examine those letters and state whether or not you recognize either or both of them, and if so, what they are?

A. The letter bears the signature of Mr. W. J. Cannon, and the reply my own signature.

Q. 60. Have you any recollection of the receipt of this letter from Mr. Cannon, and of your reply to it?

A. I don't recall the receipt of the letter, further than the evidence of the letter and of the reply.

Q. 61. But you recognize the one as——

A. Both are genuine, I think. One is Cannon's letter, whose handwriting I am very familiar with, and the other is my own signature.

Mr. RECTOR: I offer in evidence the two letters identified by the witness, and ask the same be marked "Defendant's Exhibit Cannon-Langhorne Letters."

Q. 62. I show you what purports to be an original letter written and signed by D. Cahill, on the letter-head of Burroughs Adding and Registering Machine Co., London, dated September 15, 1897, and addressed to The

Deposition of Defendant's Witness, Edmund G. Langhorne, stipulated in from Burroughs case.

American Arithmometer Co., St. Louis, U. S. A. Will you please look at that letter and state whether or not you recognize it, and if so, what it is?

A. I would say that that was in the handwriting of Mr. D. Cahill, and the letter was answered by myself.

Q. 63. What enables you to say that the letter was answered by yourself?

A. The pencil notation "9/25/97" in my own handwriting, on the second page of the letter, shows it was answered by myself.

Mr. RECTOR: I offer in evidence the letter identified by the witness and ask that it be marked "Defendant's Exhibit Cahill Letter."

Adjourned to Friday, June 5, 1908, 9:30 A. M.

NEW YORK, June 5th, 1908, 9:30 A. M.

Met pursuant to adjournment. Present, counsel as before.

Direct examination of Mr. Langhorne continued:

Q. 64. I show you some papers, Mr. Langhorne, and ask you whether you recognize them, and if so, to please state what they are.

A. This is an invoice from the American Arithmometer Company for a machine sold the St. Louis Trust Co., St. Louis, Mo. I recognize notation on the back of the invoice as in my handwriting and signed by myself as secretary. The guarantee is also signed by myself as secretary.

Q. 65. The papers relate, if I understand you, to the sale of an adding machine to the St. Louis Trust Company by the American Arithmometer Company, of which you were secretary at that time?

A. Yes, they do.

Q. 66. And the particular machine appears to have been No. 1454?

Deposition of Defendant's Witness, Edmund G. Langhorne, stipulated in from Burroughs case.

A. It is so stated on the invoice, and I have no doubt of its corectness.

Q. 67. The date of the bill or invoice of this machine to the St. Louis Trust Company appears to be February 27, 1897, and the guarantee attached to the invoice bears the same date. Can you say whether the bill was rendered and the guarantee given at that date?

A. I think there is no doubt about it.

Q. 68. I quote the following memoranda written on the back of the bill or invoice in question, which you have stated is in your handwriting:

> St. Louis, 3/2/97.
>
> "It is hereby agreed that the Broad Printing frame, will be put on this machine at a cost of 15^{00} & that said frame shall be completed by May 15th 1897—& will then be put on without further delay.
>
> "American Arithmometer Co.
> "by E. G. Langhorne Secy."

When was this endorsement written on this invoice by you?

A. On the second day of March, 1897.

Q. 69. Do you recall what the circumstances or occasion of that endorsement were—why it was given?

A. The St. Louis Trust Company ordered a machine with the understanding that it would eventually be equipped with a broad printing frame or sliding carriage for using sheet paper. This guarantee was a guarantee of that delivery.

Q. 70. Do the papers attached to this invoice show when the St. Louis Trust Company paid for the machine which it had ordered?

A. The receipt for the payment of this machine is dated March 8, 1897, and I think the cash book of the company will show that the amount was received at that time.

Q. 71. In whose handwriting is the signature of the American Arithmometer Company to this receipt?

Deposition of Defendant's Witness, Edmund G. Langhorne, stipulated in from Burroughs case.

A. It is the handwriting of Mr. B. W. Tyler, the bookkeeper, which I recognize as genuine.

Q. 72. Mr. Tyler was the bookkeeper of the American Arithmometer Company at that time?

A. He was.

Q. 73. Is Mr. Tyler now living, and if so, where?

A. I think Mr. Tyler died about a year ago.

Mr. RECTOR: I offer in evidence the invoice and receipt identified by the witness, including the endorsement, and ask to have the same marked "Defendant's Exhibit St. Louis Trust Company Invoice."

Mr. CLARKE: Objected to as immaterial and irrelevant, as not even tending to show the existence of any broad-frame mechanism made by the Burroughs Company at any time, said invoice relating solely to a roll-paper machine.

Q. 74. Are you acquainted with Henry Wells of Washington, D. C.?

A. Yes, I know Mr. Wells.

Q. 75. Did Mr. Wells have any connection with the American Arithmometer Company in 1897 and 1898?

A. He was sales agent for the American Arithmometer Company in Washington, D. C., and I believe that is the period of time he represented the company.

Q. 76. Were you familiar with Mr. Wells' handwriting and signature at that time?

A. I was.

Q. 77. I show you what purports to be some original letters written or dictated, and signed, by Henry Wells, dated Washington, D. C., January 22, 1898; January 25, 1898; January 26, 1898; January 31, 1898; January 3, 1898, and February 21, 1898—all addressed to American Arithmometer Company, St. Louis, Mo. Please state whether you recognize the signatures to those letters as the signature of the Henry Wells inquired about.

Deposition of Defendant's Witness, Edmund G. Langhorne, stipulated in from Burroughs case.

A. I recognize the signature to each letter as in Mr. Wells' handwriting.

Q. 78. And do you recognize the letter of January 26, 1898, which is written with a pen, the other letters being typewritten, as being entirely in the handwriting of Mr. Wells?

A. Yes.

Q. 79. Is there anything about these letters which indicates their receipt by the American Arithmometer Company and the date of their receipt?

A. There are pencil figures on each of the letters except the one dated January 22nd, which I recognize, and which is evidence that the letters were received and answered by the American Arithmometer Company.

Q. 80. And do the figures referred to indicate the dates of the receipt of the respective letters or the answers thereto?

A. They do. I should say they indicate the dates of the answers, the day of the month and the year being abbreviated in these figures.

Q. 81. I quote the following from Mr. Wells' letter of January 25, 1898:

> "The box of paper for the Citizens Bank has been received. I enclose you a draft for $250 in payment of the machine recently placed there."

I call your attention to the blue-pencil character and figures "#1551" written in the foregoing portion of the letter, immediately above the word "machine." Do you know when that notation was made and who made it?

A. The figures 1551 are in my handwriting, and I would say they were made on the 27th day of January, 1898, as that is the date in blue pencil at the bottom of the letter, "1/27/98" in my handwriting.

Q. 82. The latter figures indicating, if I understand you, the date at which the letter was received or was answered by you?

Deposition of Defendant's Witness, Edmund G. Langhorne, stipulated in from Burroughs case.

A. They indicate the date the letter was received and answered.

Q. 83. For what purpose did you make the notation "#1551" on the letter, and what did the notation indicate in respect to the machine referred to in the letter?

A. The notation was made for the purpose of identifying the machine paid for by the draft for $250 mentioned in the letter.

Mr. Rector: I offer in evidence the letters identified by the witness, and ask to have them marked collectively "Defendant's Exhibit Wells' Letters."

Q. 84. Mr. Langhorne, were you familiar with the books and records kept by the American Arithmometer Company during the time you were secretary and general manager of the company?

A. I was familiar with the books and systems of the company.

Q. 85. I show you a book which has been identified in this case as "Defendant's Exhibit Machine Record Journal," and ask you whether you recognize it, and if so, to state what it is?

A. I recognize the book as one in which the machines manufactured by the American Arithmometer Company were stamped by number and a record of the movements of each machine kept.

Q. 86. In other words, as I understand you, the entries in this book, under the various machine numbers stamped in the book, show the movements of the machines at the dates of the respective entries?

A. Yes, they show the location of the machines at the dates of the respective entries.

Q. 87. I note that opposite the last entry, under practically all of the machines in this book, there is a circle made with a pencil—generally a blue pencil, but occasionally a red or brown pencil. Do you know what those circles indicate?

Deposition of Defendant's Witness, Edmund G. Langhorne, stipulated in from Burroughs case.

A. My recollection of the circles at the left of the last entry under each machine number is that they were made when checking the sale on cash book, indicating that the machine was sold.

Q. 88. Then, if that was the purpose of the pencil circles, they indicated that each machine was sold at the date of the last entry under the machine number, and to the concern named in the entry?

A. That is my impression.

Q. 89. I call your attention to the entries on page 453 of this book, under machine number 1184. In whose handwriting are those entries, if you know?

A. Each entry under machine number 1184 is in the handwriting of Mr. B. W. Tyler, then bookkeeper.

Q. 90. Mr. Tyler is now dead, I believe you said?

A. Yes, he is.

Q. 91. Were the entries in the book under the various machine numbers made in the regular course of business of the American Arithmometer Company, and on or about the dates of the respective entries?

Mr. CLARKE: Objected to, as the witness has just testified that the entries on the particular page before him were made by a party who recently died, and it is not shown that this witness had personal knowledge of the making of these particular entries.

A. The movement of the machines was kept track of by what we called "Location Slips," these slips being sent in by the agents as the machines were located, and the entries were made from these slips as they were received at the office of the company.

Q. 92. Do you mean that the entries in this book were made from those slips as they were received?

Mr. CLARKE: Same objection.

A. I mean that the entries as shown under each machine number stamped in this book were made from the location slips received, and when received.

Deposition of Defendant's Witness, Edmund G. Langhorne, stipulated in from Burroughs case.

Q. 93. What was done with the location slips after the entries in this book had been made finally?

A. They were filed away as part of the records of the office.

Q. 94. Were you familiar with this particular book at the time it was being used and the entries made in it?

A. I had occasion to personally refer to the book very frequently.

Q. 95. And you were acquainted with the purpose of the book, and knew what the entries indicated at that time?

Mr. CLARKE: Objected to as not relating to any particular entries, and as therefore immaterial and irrelevant.

A. The method of keeping track of the machines as indicated by this book was a system of my own, with which I was thoroughly familiar.

Q. 96. And you were well acquainted with the handwriting of Mr. Tyler, the bookkeeper of the company, in whose handwriting you have stated the entries under machine No. 1184 are?

A. Yes.

Q. 97. Now, will you please refer to those entries under machine No. 1184, and state what they indicate with respect to said machine?

Mr. CLARKE: Objected to as immaterial and irrelevant, as the entries are said to have been made by a person who recently died, and this witness is not shown to have had personal knowledge of the making of these particular entries on this page of the book.

A. They indicate that machine No. 1184 was located July 29, 1896, Bourbon Bank, Paris, Kentucky; September 9th, 1896, Agricultural Bank, Paris, Kentucky; October 10, 1896, Capital State Bank, Jackson, Mississippi; December 24, 1896, factory; broad printing frame (simply without date); March 23, 1897, Joseph Boyer, Chi-

Deposition of Defendant's Witness, Edmund G. Langhorne, stipulated in from Burroughs case.

cago, Illinois; May 24, 1897, factory; May 27, 1897 changed back; June 11, 1897, Mason Spiekerman, Selma Tennessee; June 23, 1897, Mercantile Bank, Memphis Tennessee.

Q. 98. Referring to the words "Broad Printing Frame" written in red ink along the line between the dates 12/24/96 and 3/23/97, do you know what that entry refers to?

A. It refers to the fact that a broad printing frame was put on machine 1184, which had previously been a machine for using roll paper.

Q. 99. And what does the entry in red ink, "Changed back," opposite the date 5/27/97, indicate?

A. It indicates that the broad printing frame was removed from the machine 1184 and said machine converted back into a roll paper machine.

Q. 100. Attention has been called to the fact, in the cross-examination of another witness, concerning this book and these entries, that the entry in red ink, "Broad Printing Frame," appears to have been written on a line from which some previous entry in black ink had been erased. Do you know anything about such entry or its erasure?

A. I do not.

Mr. CLARKE: In view of the witness' last answer, all of his testimony in respect to the significance of the entry "Broad Printing Frame" on this page of the book referred to, is objected to as incompetent, and also as immaterial and irrelevant.

Q. 101. I call your attention to page 589 of this book and the entries thereon under machine number 1454. In whose handwriting are those entries, if you know?

A. The entries under No. 1454 are in the handwriting of Mr. B. W. Tyler.

Q. 102. Please state what those entries indicate with respect to machine number 1454.

Deposition of Defendant's Witness, Edmund G. Langhorne, stipulated in from Burroughs case.

A. The entries under number 1454 indicate the location subsequent to its completion. They are, 2/27/97, St. Louis Trust Company, St. Louis, Mo.; 7/29/97, factory; 10/5/97, Bank of Oxford, Oxford, Mississippi.

Q. 103. And this last entry, with the blue pencil circle opposite to it, indicate, as I understand, your previous testimony, that the machine was finally sold to the Bank of Oxford, October 5, 1897?

Mr. CLARKE: Objected to, as the witness has not testified that the blue pencil circle supposed to indicate a sale was placed opposite the date of such sale.

A. The blue pencil circle opposite the last entry indicates that the machine was sold. The cash book will show the record of the sale as to date.

Q. 104. Then, as I understand you, the last entry in this book, under machine No. 1454, with the blue pencil circle opposite to it, indicates that the machine was finally sold to the Bank of Oxford, but does not show the date of the sale?

A. Your understanding is correct.

Q. 105. The date of the entry in this book merely indicating the date at which the machine was located or placed in said bank, as I now understand you?

A. That is a fact.

Q. 106. And the same would be true of the last entry under machine No. 1184, previously referred to?

A. It would.

Q. 107. I call your attention to page 634 of this book, and to the entries thereon, under machine No. 1540, said entries being headed with the words "Broad Frame" written in red ink. In whose handwriting are these entries, including the words "Broad Frame," if you know?

A. The handwriting is that of Mr. B. W. Tyler.

Q. 108. And what do these entries indicate with respect to machine No. 1540?

A. They indicate the style of machine, and the places

Deposition of Defendant's Witness, Edmund G. Langhorne, stipulated in from Burroughs case.

it was located; that is, the parties with whom it wa located.

Q. 109. Please refer to the entries and state the sev eral locations of the machine to which they refer, an the dates of them.

A. Under No. 1540, the words "Broad Frame," suc ceeded by the following entries: "5/20/97, Wyeth & Langhorne, Chicago, Illinois; 6/4/97, Factory; 7/29/97 St. Louis Trust Co., St. Louis, Mo. (side check table)."

Q. 110. The first entry, as I understand your testi mony, indicates that the machine was sent to Wyeth & Langhorne at Chicago, on May 20, 1897?

A. It does.

Q. 111. And the second, that it was returned to th company's factory at St. Louis on June 4, 1897?

A. It does.

Q. 112. And the third, that it was placed with the St Louis Trust Company, at St. Louis, on July 29, 1897.

Mr. CLARKE: Objected to, as it is not shown tha this witness had personal knowledge of the makin of these particular entries.

A. The entry so indicates, and I believe it to be cor rect.

Q. 113. And the blue pencil circle opposite this las entry indicates that this machine was sold to the St Louis Trust Company?

Mr. CLARKE: Same objection.

A. It does.

Q. 114. I call your attention to page 638 of thi book, and to the entries thereon under machine numbe 1549, as follows:

"1549
BROAD PRINTING FRAME (SIDE CHECK TABLE).
4/15/97 W. J. Cannon, Lincoln England."

In whose handwriting are these entries, if you know

A. The handwriting is that of Mr. B. W. Tyler.

Deposition of Defendant's Witness, Edmund G. Langhorne, stipulated in from Burroughs case.

Q. 115. And what do they indicate with respect to machine No. 1549?

Mr. CLARKE: Objected to, as the witness is not shown to have personal knowledge of when these particular entries were made by the recently deceased party Tyler.

A. The entries indicate that the machine 1549 was a broad printing frame machine with side check table, and that it was sold to W. J. Cannon, Lincoln, England.

Q. 116. What do they indicate with respect to the date at which the machine was sent to Mr. Cannon?

Mr. CLARKE: Same objection, and the further objection that this line of examination is merely a rereading into the record by the witness of book entries that have already been fully copied into this record.

A. The machine No. 1549 was shipped to W. J. Cannon 4/15/97.

Q. 117. I call your attention to page 639 of this book, and to the entries thereon under machine No. 1551, as follows:

"1551
BROAD PRINTING FRAME
1/15/98 Henry Wells, Washington, D. C.
1/22/98 Citizens Bank " " "

In whose handwriting are those entries, if you know?

A. The entry "Broad Printing Frame" and "1/15/98, Henry Wells, Washington, D. C.," is in the handwriting of Mr. B. W. Tyler. The entry "1/22/98, Citizens Bank, " " " is the handwriting of Mr. John F. Calef, now of Philadelphia, Pennsylvania.

Q. 118. And what do these entries indicate with respect to machine 1551?

Mr. CLARKE: Same objection.

A. They indicate that it was a broad printing frame machine sent to Henry Wells, Washington, D. C., 1/15/98, and located 1/22/98 with Citizens Bank, Wash-

Deposition of Defendant's Witness, Edmund G. Langhorne, stipulated in from Burroughs case.

ington, D. C. The circle in blue pencil indicates that the machine was sold to the Citizens Bank.

Q. 119. I call your attention to page 651 of this book, and to the entries thereon under machine No. 1575. In whose handwriting are those entries, if you know?

A. The entries are in the handwriting of Mr. B. W. Tyler

Q. 120. And what do those entries, including the words "Broad Frame," which head them, indicate with respect to machine No. 1575?

Mr. CLARKE: Same objections, and counsel for complainant is entirely willing to stipulate that these entries read just as the witness is reading them, as a mere reading of the said entries appears to be the only response thus far given to counsel's numerous questions as to what said entries, written by a recently deceased person, and not shown to have been made with the personal knowledge of this witness, "indicate."

A. They indicate that machine 1575 was a broad frame machine, located 8/11/97, J. H. Wyeth, Jr., Chicago, Illinois; 8/19/97, Montgomery Ward & Co., Chicago, Illinois; 10/14/97, factory for repair; 10/22/97, J. H. Wyeth, Jr., Chicago, Illinois; 10/23/97, sold to Montgomery Ward & Co., Chicago, Illinois.

Q. 121. Do you mean that the blue pencil circle opposite the last entry indicates the machine was sold to Montgomery Ward & Co. at the date of that entry, or merely that it was sold at some time to that concern?

A. I mean that the machine was located 10/23/97, and at some later date sold.

Q. 122. I show you another book, which is in evidence in this case of "Defendant's Exhibit Sales Record Book," and ask you whether you recognize it, and if so, please state what it is?

A. I recognize the book as one in which entry of sales

Deposition of Defendant's Witness, Edmund G. Langhorne, stipulated in from Burroughs case.

were made as remittances were received for the respective machines.

Q. 123. Do you say you recognize it as the record book of the Arithmometer Company used for the purpose mentioned?

A. I do.

Q. 124. Were you familiar with this book at the time it was in use by the American Arithmometer Company?

A. Yes, the records were kept under my direction, and some of the entries were made by myself.

Q. 125. What was the practice, in the making of entries of sales in this book, with respect to the dates at which the entries were made?

A. It was a book in which the machine number, the date of sale, and the name and address of purchaser was entered.

Q. 126. Do the dates of the entries indicate the dates of the sales of the respective machines, or the dates at which the remittances for the machines were received, or something else?

A. The entries indicate the dates the remittances were received, as also the date of guarantee.

Q. 127. And were the entries usually made on or about the dates of the receipts of the remittances to which they related?

A. The entries were promptly made upon receipt of remittances.

Q. 128. I call your attention to the following entry appearing on page 9 of this book:

"Broad Frame
1575 11/30 Montgomery Ward & Co., Chicago, Ill."

In whose handwriting is this entry, if you know?

A. The entry 1575 is in the handwriting of Mr. B. W. Tyler.

Q. 129. And the date "11/30" appears in a column of dates headed "1/5/97," does it not?

Deposition of Defendant's Witness, Edmund G. Langhorne, stipulated in from Burroughs case.

A. Yes.

Q. 130. Are all of the entries in that column in Mr. Tyler's handwriting?

A. All of the entries in that column are in Mr. Tyler's handwriting down to and including the entry of machine 1575.

Q. 131. I call your attention to the following entry on page 44 of this book:

"1540
"1454 2/27/97 St. Louis Trust Co., St. Louis, Mo."

In whose handwriting is that entry, if you know?

A. The entry is in the handwriting of Mr. B. W. Tyler.

Q. 132. And what does it indicate with respect to machines 1454 and 1540?

A. It indicates that machine 1454 was replaced by 1540, sold 2/27/97 to St. Louis Trust Co., St. Louis, Mo.

Q. 133. I call your attention to the following entry on page 51 of this book:

"151 1/27/98 Citizens Bank, Washington, D. C."

In whose handwriting, if you know, is that entry?

A. Mr. John F. Calef.

Q. 134. What connection did Mr. Calef have with the American Arithmometer Co. at the date of that entry?

A. I think Mr. Calef had just taken Mr. Tyler's place as head bookkeeper.

Q. 135. And where is Mr. Calef now?

A. Mr. Calef now resides in Philadelphia.

Q. 136. I call your attention to the following entry on page 126 of this book:

"1951 3/1/98 National Bank of the Republic, Chicago, Ill."

In whose handwriting is that entry?

A. In the handwriting of Mr. John F. Calef.

Deposition of Defendant's Witness, Edmund G. Langhorne, stipulated in from Burroughs case.

Q. 137. I call your attention to the entries on page 174 of this book, under the heading:

"Standard Machines Sold to the Burroughs Adding and Registering Co. (Limited), 13 Silver Street, Lincoln, England."

and particularly to the last entry under said heading, reading as follows:

"1549 4/15/97 W. J. Cannon Brd. Frame. Lincoln, England."

In whose handwriting are the entries on this page, under the heading quoted, including the entry last referred to?

A. The entries as to machine, numbers, dates, consignee and destination, are in the handwriting of Mr. B. W. Tyler. The word "Duplicating" in pencil on the line with entry machine 1410, 1/28/97, and the words "Brd. Frame," in pencil on the line with machine 1549, 4/15/97, are in my own handwriting.

Q. 138. Do you remember when you wrote the words "Brd. Frame" which appear in pencil in the entry relating to machine No. 1549?

A. It was after my return from England, and probably in the first part of June, 1897.

Q. 139. I show you some books which have been identified in this case as "Defendant's Shipping Order Books" Nos. 1, 2, 2-A, 3, 4 and 5. Will you please look at those books and state whether you recognize them, and if so, what they are?

A. I recognize these as books used by American Arithmometer Company for keeping record of shipments.

Q. 140. And were such books used in the regular course of business of that company at the date appearing in them, ranging from March 22, 1897, to January 26, 1898?

A. These books were used to keep a record of all out-

Deposition of Defendant's Witness, Edmund G. Langhorne, stipulated in from Burroughs case.

going commodities shipped by the American Arithmometer Company and during the period mentioned.

Q. 141. I show you a book having printed upon its back the following words and figures:

"Duplicating
and
Sliding
Carriage
Machine

4000
to
5999"

Will you please look at that book and state whether you recognize it, and if so, explain what it is?

A. Yes, I had the book made for the purpose of keeping a record of the machines shipped from the factory to the American Arithmometer Company, showing the machine number, and its movements.

Q. 142. The entries in this book appear to relate entirely to machines numbered from 4001 to 5999, as indicated upon the back of the book. Were all of those machines, bearing numbers from 4001 to 5999, broad frame or sliding carriage No. 3 machines, such as you have mentioned in your testimony?

A. The book was made for keeping a record of the broad frame sliding carriage style 3 of machines of the numbers from 4001 to 5999, including, all of which, to the best of my knowledge, were broad frame machines.

Q. 143. I note that the title of the book, appearing on the back of it, refers to "Duplicating and Sliding Carriage Machines." What was the significance of the word "Duplicating" as there used?

A. The American Arithmometer Company manufactured a limited number of machines, to which were attached what was known as the duplicating device, which

Deposition of Defendant's Witness, Edmund G. Langhorne, stipulated in from Burroughs case.

consisted of a ribbon moving transversely to the ribbon on the machine, the purpose of this device being to obtain duplicate copy of original work.

Q. 144. Do the entries in this book show the movements and disposition of the No. 3 machines 4001 to 5999 manufactured and sold by the American Arithmometer Company, with the dates of such movements?

A. Yes.

Mr. RECTOR: I offer in evidence the book identified by the witness, and ask to have the same marked "Defendant's Exhibit Machine Record No. 3 Machines."

Mr. CLARKE: Objected to as incompetent, insofar as the witness is not shown to have personal knowledge of the making of all of the entries in said book.

Q. 145. Were you familiar with this book and the use of it by the American Arithmometer Company during the time the entries were made?

A. The book was kept at my direction, and I had occasion to refer to it very frequently, if not daily, when I was at the factory.

Q. 146. You referred yesterday, Mr. Langhorne, to a set of tools which the American Arithmometer Company made in the latter part of 1897 and early part of 1898 for the manufacture of the broad frame or wide paper carriage of its No. 3 machine. Do you remember anything about the cost of that set of tools?

A. I do not recall the amount, it was a considerable item of expense.

Q. 147. Do you remember whether it was more or less than $5,000?

A. It was in the neighborhood of $5,000.

Q. 148. And how many No. 3 wide paper carriage machines was the company able to turn out per day or per month with that set of tools, in connection with

Deposition of Defendant's Witness, Edmund G. Langhorne, stipulated in from Burroughs case.

other tools which it had for the building of the main part of the machine?

A. I think they manufactured them in the early part of the broad frame—say the last half of 1898—at the rate of fifty machines per month, and in 1899, more.

Q. 149. Do you recall how long the company continued the manufacture of the wide paper carriages of its No. 3 machines with that first set of tools made for the purpose?

A. The same tools were used during my entire time, and added to from time to time, as to some small tools.

Q. 150. What would you say as to the total cost or value of the special tools for the manufacture of the wide paper carriage of the No. 3 machine which the company was using—say in 1900 or 1901?

A. There was no opportunity for a very great increase in the cost of tools over the first sum of $5,000. There were some few hundred dollars during 1899 and 1900 added.

Q. 151. And at what rate was the company manufacturing its No. 3 wide paper carriage machines in 1900 and 1901?

A. I think the output of the factory, which consisted practically of sliding carriage machines, was about 1,700 in 1900 and about 2,100 in 1901.

Q. 152. When did your connection with the company terminate?

A. On the 13th or 14th of January, 1902.

Q. 153. What sort of adding machines did the American Arithmometer Company manufacture prior to bringing out its broad frame or wide paper carriage machines?

A. They manufactured machines for the use of roll paper, varying in width from 2½ to 3½ inches, known as No. 1 machines.

Deposition of Defendant's Witness, Edmund G. Langhorne, stipulated in from Burroughs case.

Q. 154. Will you please look at a copy of letters patent No. 504,963, granted to the American Arithmometer Company on the application of William S. Burroughs, September 12, 1893, and state whether or not that patent exhibits, in a general way, the No. 1 roll paper machines which you have referred to?

Mr. CLARKE: Objected to as incompetent, it not having been shown that the witness is an expert in the translation of patent drawings and specifications.

While counsel for complainant was dictating the above objection the defendant's counsel remarked to the witness, but has just declined to insert upon the record, "of course I do not care anything about details—just the general type of the machine."

A. The cut on sheet No. 1, patent No. 504,963, displays the frame and bracket for feeding and carrying roll paper, and is the general type, or is the type of machine known as No. 1.

Q. 155. I understand you, then, this patent 504,963 does exhibit the general type and character of No. 1 Burroughs machine referred to?

Mr. CLARKE: Same objection.

A. It does.

Q. 156. Please also look at copy of patent No. 595,864, issued to the American Arithmometer Company, on the application of William H. Pike, Jr., on December 21, 1897, which is in evidence in this case, and state whether or not the drawings in that patent exhibit, in a general way, the broad frame or sliding paper carriage No. 3 Burroughs machines to which you have referred in your testimony?

Mr. CLARKE: Same objection.

A. The drawings in Pike patent No. 595,864, December 21, 1897, describe the Burroughs broad carriage machine, style No. 3.

Deposition of Defendant's Witness, Edmund G. Langhorne, stipulated in from Burroughs case.

Q. 157. These No. 3 machines were substantially the same as the No. 1 machines, excepting that the No. 1 machines were equipped for the listing of items in a single column on a narrow strip of paper, while the No. 3 machines were equipped with wide paper carriages, to receive wide sheets of paper, and movable across the machine to permit the listing of items in separate parallel columns, were they not?

A. On the No. 1 machine roll paper only could be used. On the No. 3 machines both roll paper and sheet paper can be used.

Direct examination closed.

Cross-Examination by Mr. Clarke.

X-Q. 158. The previous evidence in this case indicates that the first five sheets of the drawings of the Pike patent, in evidence, were prepared from the machine No. 1184, which was sent to Mr. Rector early in the spring of 1897, while the sixth sheet of drawings in that patent, showing a different wide carriage mechanism, were prepared from the machine No. 1540, that was sent up to Chicago for a couple of weeks about the last of May in that same spring, and the evidence also indicates that the machine No. 1549 that was sent to Mr. Cannon and yourself in England, was shipped to England in the middle of April, or over a month before the machine 1540, above referred to, was sent to Chicago. Was the machine 1549, sent to England, like the machine 1184, or like the machine 1540?

A. My recollection is that the machine 1549, sent to myself at London, England, for account of Mr. Cannon, was equipped with a carriage of the same general construction as that shown in sheet 6 of the drawings of patent 595,864. Machine No. 1540 was sent to Mr. Rector at Chicago during my absence abroad, which was

Deposition of Defendant's Witness, Edmund G. Langhorne, stipulated in from Burroughs case.

from the middle of March until the middle of May. I believe the construction of the broad carriage on this machine was practically that, or like that, of machine 1549. Machine No. 1184 I do not recall as to number, but it is likely it was equipped with broad carriage similar to that shown on sheet No. 4 of patent No. 595,864.

X-Q. 159. Were the machines No. 1575 and No. 1551, and 1951, which are said to have been equipped with a broad frame and delivered respectively to Montgomery Ward & Co. of Chicago, and the Citizens Bank of Washington, and the National Bank of the Republic of Chicago, like the machine 1540, of sheet 6 of the Pike patent, or like the machine 1184 of the first five sheets of said patent?

A. My impression is the machines mentioned were similar in construction to that shown on sheet 6 of the patent. That is, machines 1575, 1551 and 1951.

X-Q. 160. Mr. Langhorne, the manufactured broad frame Burroughs machines of the 4000 series had, did they not, a pair of pressure rollers, one mounted above and one mounted below the roller platen, and both supported in swinging frames and held toward each other and against the platen by springs stretched between such swinging frames at either end of the roller platen, the two frames engaging each other so that when the frame of the upper roller was oscillated by its finger holds, to lift such upper roller from contact with the roller platen, the other frame would also be oscillated to depress the lower roller from contact with the roller platen; while on the first five sheets of the Pike patent neither of these pressure rollers appears, and on the sixth sheet of drawings of said patent only an upper pressure roller above the roller platen appears?

A. The machine equipped with the broad carriage sliding frame, those of the 4000 and 5000 series, were

Deposition of Defendant's Witness, Edmund G. Langhorne, stipulated in from Burroughs case.

manufactured with the upper and lower pressure rolls, as you describe.

X-Q. 161 Why was the lower pressure roll and its oscillating frame in engagement with and spring-connected to an upper pressure roller, added to the said machines of the 4000 and 5000 series?

A. For better controlling the sheet of paper.

X-Q. 162. You mean they remedied some fault in the paper feeding of the sheet of paper?

A. I mean that when it was fed from under the control of one set of rollers up or down, it was under the control of the other set.

X-Q. 163. The manufactured broad frame Burroughs machines of the 4000 series had, did they not, a set of three double tooth-edged disks mounted on the rotating shaft that fed the paper, said disks making contact with the paper carried around the roller platen, and being mounted on said rotating shaft adjacent to, respectively, three wide smooth-faced metal rollers, also mounted on said shaft; while in the drawings of the Pike patent, the said rotating feed shaft carried only three rubber-faced rollers, lettered M in said patent?

A. The construction as to some of the machines was practically as you describe. All of the machines manufactured were not equipped with the tooth-edged disks and the smooth roll.

X-Q. 164. Do you mean that the other had just the tooth-edged disks?

A. The tooth-edge disks and the smooth rolls were used in some instances; in others, the smooth rolls were not used in connection with the tooth-edge disks, and in still others, the tooth-edged disks were not used, the knurled disk being used instead.

X-Q. 165. You mean relatively wide knurled metal rollers?

A. That is what I meant.

Deposition of Defendant's Witness, Edmund G. Langhorne, stipulated in from Burroughs case.

X-Q. 166. Why were the tooth-edged disks or the knurled rollers used instead of the rubber rollers?

A. To more positively feed the paper.

X-Q. 167. That is, to insure its moving forward the required line space at each actuation of the machine?

A. This construction it was thought desirable, and some of the machines were built that way, the use of these disks insuring the more positive control or feeding of the paper.

X-Q. 168. In the manufactured broad frame Burroughs machines of the 4000 series the upper pressure roller, above the platen, had its middle portion, for about the width of the narrow roll paper also carried by the machine, reduced in diameter sufficiently so that the rubbers along said middle portion did not make contact with the roller platen, had it not; and what was the purpose of this reducing of the middle portion of the upper pressure roller?

A. The upper pressure roller located at the printing point of the machine was slightly smaller, made so to diminish the pressure on the paper at that point to give a cleaner appearance of the work.

X-Q. 169. This feature of so reducing the middle portion of the pressure roller does not show, does it, in the drawings of the Pike patent?

A. It could not show, looking at the end view of the pressure rollers, and I don't see that it shows looking at the plan view.

X-Q. 170. The Pike patent shows a series of slender spring pieces, lettered H′, surrounding the roller platen. These were made of watch-spring, were they not, and what was their purpose?

A. The necessity for these pieces, and the office of them, as I recall, was for the purpose of guiding the paper around the roll, and having some friction assist

Deposition of Defendant's Witness, Edmund G. Langhorne, stipulated in from Burroughs case.

in controlling the paper or feeding it. As to the material from which they were made, I do not recall. The construction referred to is not that of the broad frame regularly manufactured.

X-Q. 171. How did the latter differ?

A. The bands around the platen for properly guiding the paper were, in the machines of regular manufacture, anchored at both ends, thus serving as a guide only.

X-Q. 172. And what was gained by that change?

A. It simplified the manufacture and the construction was more durable.

X-Q. 173. Just in what sense was it more durable?

A. I should say there were no loose fingers to be bent out of position, if the device was carelessly handled.

X-Q. 174. This bending out of position would have what effect on the paper being fed?

A. If all of them were bent out of position the assistance they lent in feeding the paper would be diminished.

X-Q. 175. And if any were bent out of position the feeding of the paper would be impeded?

A. It might be, but as there was never but one or two frames of the construction shown on sheet No. 4 of the patent in question, I am not quite clear as to what the effect would be in general use.

X-Q. 176. Mr. Langhorne, how did the paper feed on the machine 1549, that you exhibited in England, behave as compared with the paper feed of the manufactured Burroughs machines of the 4000 series?

A. I don't recall that I had any trouble with the paper feed in exhibiting the machine 1549, as I didn't have occasion to use it very much.

X-Q. 177. You were then familiar with operating

Deposition of Defendant's Witness, Edmund G. Langhorne, stipulated in from Burroughs case.

Burroughs machines, were you not, in exhibiting them to customers?

A. I didn't have occasion to do this frequently, but I could exhibit the machine; that is, I was not expert, but fairly familiar with the machine.

X-Q. 178. Who was this Mr. Cannon to whom that machine was billed?

A. He was one of the promoters residing in England who undertook the sale of the foreign patent rights, or the Burroughs foreign patents, owned by the American Arithmometer Company of St. Louis, Mo.

X-Q 179. You afterwards sent Mr. Cannon one of the manufactured Burroughs machines of the 4000 series, soon after the company began to put them out, did you not?

A. I think it is very likely, as we were shipping them machines. I don't recall any particular shipment.

X-Q. 180. Did you see personally the machine 1551 that is said to have been sold to the Citizens Bank of Washington?

A. I can't state positively, but I don't think there is any doubt about it. That is, I think there is no doubt of my having seen the machine in the factory.

X-Q. 181. After January 22, 1898, the date at which the machine 1551 is said to have been delivered to the Citizens Bank, was the machine 1551, to your recollection, either changed or replaced—that is, after the Burroughs Company began putting out the regular manufactured broad frame machines of the 4000 series?

A. I can't state positively that it was exchanged, but it is likely that it was, as it was the policy of the company in those early days to give their customers the best they could manufacture.

X-Q. 182. After the Burroughs Company began putting out the regularly manufactured broad frame ma-

Deposition of Defendant's Witness, Edmund G. Langhorne, stipulated in from Burroughs case.

chines of the 4000 series, was the machine 1540, said to have been delivered to the St. Louis Trust Company of St. Louis, either changed or replaced, to your recollection?

A. I recall that the Trust Company was promised the benefit of any refinement or improvement in the broad carriage which might later be made, and it is very likely that the machine was later exchanged, although I can't state positively that it was.

X-Q. 183. On the third sheet in the old record book, "Defendant's Exhibit Machine Record No. 3 Machines," I find an entry purporting to indicate that on August 6th, 1898, the machine No. 4054, of the manufactured broad frame series, was shipped to Nottingham, England, to "B. A. & R. Co., Limited." Was this a broad frame machine shipped to the English company that Mr. Cannon promoted?

A. The "B. A. & R. Co., Limited," is the Burroughs Adding & Registering Machine Co., Limited, which company, through Mr. W. J. Cannon and his associates, acquired the Burroughs foreign patents sold by the American Arithmometer Company, and I would say that machine 4054, shipped 8/6/98, was a broad frame machine.

X-Q. 184. The manufactured Burroughs machines, of the 4000 series, had, did they not, a forked flat spring member secured to the under part of the broad frame, and bearing against the roller mounted on one end of the paper feeding shaft; while said member is not known in the drawings of the Pike patent?

A. There was a forked flat spring in the construction of the broad frame machine manufactured, and I believe it was located as you describe.

X-Q. 185. What was its purpose?

A. It was to cause the more positive feeding of the pressure roller.

Deposition of Defendant's Witness, Edmund G. Langhorne, stipulated in from Burroughs case.

X-Q. 186. When the Burroughs machines of the 4000 series were manufactured, what changes were made in the coiled spring concealed within the indicator disk mechanism at one end of the broad carriage, and what was the purpose of those changes?

A. I don't recall the change from the coil to a leaf spring, but the leaf or clock spring was arranged to trip itself at a certain tension to prevent the locking of the counter in its forward movement, or in its regular rotating.

X-Q. 187. Do you positively recall ever having seen either of the machines 1184 or 1540 that were sent to Mr. Rector?

A. I cannot recall the machines by their serial number, as they were sent to Mr. Rector during my absence from the factory. I can only state as to the records, which show that these machines 1184 and 1540 were sent.

X-Q. 188. You have testified that you of course recognized Mr. Tyler's handwriting; but do you positively remember having seen him make the particular entries relating to broad frame machines of lower numbers than the 4000 series that were shown you this morning?

A. I cannot.

X-Q. 189. As to the colored pencil circles marked on the records of these broad framed machines, of lower serial number than 4000, which were shown you this morning, are you able to positively say by whom said circles, which are, of course, not "handwriting," were made?

A. I cannot.

X-Q. 190. Was it the practice of the Burroughs Company while you were its manager, and later its president, to collect copies of the advertising matter given out from time to time by its competitors, such as the manufacturers of the Comptograph?

Deposition of Defendant's Witness, Edmund G. Langhorne, stipulated in from Burroughs case.

A. Our representatives sent to the home office such literature of this kind as they got hold of, and we kept what was sent, both by them and others who might be interested in the American Arithmometer Company. We tried to keep informed as to what was going on.

X-Q. 191. With what banks in the City of Boston did the Arithmometer Company have any dealings, in respect to the purchase of Burroughs machines, during the middle nineties, so far as you remember?

A. Those are details I can't recall. We did business with the National Shawmut Bank, I think, and we solicited all of them.

X-Q. 192. Prior to the manufacture of the broad frame machines of the 4000 series, about how much money had the Burroughs Company expended or invested in equipment for the manufacture of, and in the promotion and sale of the No. 1, or roll paper Burroughs machines?

A. The Burroughs Company was in business some years before I went with them. The capital stock of the company at the time I first went to work was $200,000, and increased later to $250,000. As to how much of the original capital was paid in in money I am not advised. The company borrowed some money after I commenced work, the amount was probably $25,000. This, with the capital stock, represents, as far as I can see, the company's investment. I do not mean that this sum represented by the capital stock and the amount borrowed, was spent alone for equipment, but was spent for equipment and the conduct of the business, up to, I would say, 1895.

X-Q. 193. What became of the machines manufactured by the Burroughs Company of lower serial number than the 500 series?

A. They were—at least a large proportion of them—

Deposition of Defendant's Witness, Edmund G. Langhorne, stipulated in from Burroughs case.

rebuilt and given new numbers, and again placed in service.

X-Q. 194. About how many adding machines did the Burroughs Company make in 1895?

A. About 230 or 235, I think.

X-Q. 195. And in 1896?

A. I should say 550.

X-Q. 196. And in the first half of 1897?

A. At the rate of about fifty per month.

X-Q. 197. What does the "Defendant's Exhibit Machine Record No. 3 Machines" show to have been the date of the commencement of the sending out of the manufactured broad frame machines by the Burroughs Company?

A. The first number in the record is partly torn away, but from its location the machine number is 4001, the same being shipped 7/6/98 to J. H. Wyeth, Jr., Chicago, Illinois.

X-Q. 198. And when does that record show the first broad frame machine was sent to Mr. Harry B. Wyeth, agent in another territory, as I understand?

A. The record shows that machine 4034 was shipped 7/27/98 to H. B. Wyeth, Philadelphia, Pennsylvania. The record also shows that machine 4044 was shipped 7/26/98 to H. B. Wyeth, Philadelphia.

X-Q. 199. How many machines were there in the first batch of broad frame machines manufactured of the 4000 series?

A. I think an order was issued for 100 machines, and they appeared in lots of twenty-five, as to the broad frame. This was, as I recollect, for the purpose of hurrying them out.

X-Q. 200. In 1897, what other competitors, if any, did the Burroughs Company have in the adding and listing machine business, besides the manufacturers of the Comptograph?

Deposition of Defendant's Witness, Edmund G. Langhorne, stipulated in from Burroughs case.

A. The Universal Adding Machine Company was working on adding machines, and, I think, were putting out a few, but I won't be positive about this; that is, as to their putting them out then.

X-Q. 201. So that this Universal concern was no considerable factor in the competition?

A. No, I don't recall that it was.

X-Q. 202. The broad frame machines of the 4000 series were first made by the Burroughs Company, were they not, with the tools made for the manufacture of broad frame machines?

A. Some of the parts of the broad frame placed on machines of lower serial number were made with the tools built to manufacture broad frames, but the majority of the parts in these frames were made by hand.

Cross-examination closed.

Re-direct Examination by Mr. Rector.

R-D-Q. 203. Referring to machines of the 4000 series sent to Mr. Cannon, or his company, in England, did the American Arithmometer Company send any considerable number of its No. 3 broad frame machines to Mr. Cannon or his company after it began the manufacture of those machines?

A. My recollection is that quite a number of machines were shipped to foreign cities on the order of Mr. Cannon and his company.

R-D-Q. 204. The American Arithmometer Company supplied the English company with all the machines sold by the English company for a considerable period of time, did it not, before the English company began manufacturing machines for itself?

A. I think all the machines sold by the Burroughs foreign company through 1897 and 1898 were those man-

Deposition of Defendant's Witness, Edmund G. Langhorne, stipulated in from Burroughs case.

ufactured by the American Arithmometer Company, and probably some in 1899.

R-D-Q. 205. Do you know where the English company got its equipment for the manufacture of the Burroughs machines when it finally began the manufacture of them for itself?

A. The entire plant with which the company first started business, including machinery, dies and special tools, was purchased from the Boyer Machine Company of St. Louis, Missouri; said company built the special tools and shipped the entire equipment to Nottingham England.

R-D-Q. 206. When was that?

A. The shipment was made in the summer and fall of 1897, to my recollection. I know the setting up of the machinery in Nottingham, England, was done in the spring of 1898.

R-D-Q. 207. Did you personally have anything to do with securing this order for the equipment of the English factory for the Boyer Machine Company?

A. Yes, the order was placed through my efforts; that is, I secured the order and contracted with the Boyer Machine Company to furnish the plant.

R-D-Q. 208. Do you know what price was paid by the English company to the Boyer Machine Company for that plant and equipment, including the machinery, dies and special tools?

Mr. CLARKE: Objected to as not calling for the best evidence; the records of the Boyer Machine Company would be the best evidence of the matter inquired about.

A. The price, I remember, was $36,000, of which I received part for my services.

R-D-Q. 209. Did the American Arithmometer Company at any time while you were its secretary and general manager purchase, or have built for it, a complete

Deposition of Defendant's Witness, Edmund G. Langhorne, stipulated in from Burroughs case.

set of special tools for the manufacture of its No. 1 machines?

A. The tools and the machinery for the manufacture of the No. 1 machines were built and supplied by the Boyer Machine Company prior to my going with the Arithmometer Company.

R-D-Q. 210. You have referred to Mr. Tyler having been succeeded as bookkeeper by Mr. Calef, about January, 1898. Did Mr. Tyler sever his connection with the American Arithmometer Company at that time; if not, how long thereafter did he remain in the company?

A. My recollection is that Mr. Tyler continued with the company a short time after Mr. Calef arrived, in January, 1898, until Mr. Calef could become informed as to the general office business. He did not remain very long.

R-D-Q. 211. You may have stated, but I will ask you again, whether you recognize the words "Broad Printing Frame" written in red ink among the entries under the machine number 1184 in "Defendant's Exhibit Machine Record Journal" as being Mr. Tyler's handwriting?

A. The words "Broad Printing Frame" written with red ink, under machine No. 1184, are in the handwriting of Mr. B. W. Tyler.

R-D-Q. 212. Did the regular No. 3 machines manufactured by the American Arithmometer Company, beginning with the 4000 series, follow the construction shown in the drawings on sheet 6 of the Pike patent No. 595,864, or the drawing shown on page 5 and the preceding pages, so far as such constructions differ from each other?

A. The construction of the broad frame machine of the 4000 and 5000 series was the same as that shown on sheet 6, patent No. 595,864.

Deposition of Defendant's Witness, Edmund G. Langhorne, stipulated in from Burroughs case.

Re-cross Examination by Mr. Clarke.

R-X-Q. 213. When, if ever, did the English company begin to make a profitable business of the manufacture of Burroughs machines?

A. Having been a stockholder in that company, I received the annual reports of the business of the company, and my impression is that the business showed a profit in 1899, or for that year.

R-X-Q. 214. How much money was put in it in addition to the amount spent for equipment of tools?

A. The sum of $200,000 was paid for the patents. As to other expenditures, except as to the plant, I am not advised. I believe there was no particular expense except that of purchase of material and cost of labor, and the general conduct of the business.

R-X-Q. 215. And what would the investment for the purchase of material and the building of a stock of machines to put out on trial, and for the general conduct and expense of the business, probably amount to?

A. That would depend upon the quantity of material purchased and the number of men employed in the factory, and the extent of organization for selling the machines. The English company having made a cash contract with a Continental buyer, did not find it necessary to expend the usual amount of money to introduce the machine through salaried salesmen.

R-X-Q. 216. Ordinarily the investment for stock of machines for trial, and the organization of a force of salaried salesmen for the introduction of a new adding machine is very large, is it not?

A. Yes, it is not a cheap business to go into. It requires a considerable amount of money if you want to push the business.

R-X-Q. 217. Often up into many tens, or even some hundreds, of thousand of dollars?

Deposition of Defendant's Witness, Edmund G. Langhorne, stipulated in from Burroughs case.

A. Yes, I think that is not an exaggerated sum.

R-X-Q. 218. Of course, your answer to R-D-Q. 212 had in view the qualification appended to the counsel's question, namely, "so far as such constructions differ from each other," did it not?

A. The machines of the 4000 and 5000 series, as to the broad printing frame, followed practically the construction shown in the drawing on sheet No. 6, patent No. 595,864.

R-X-Q. 219. Sheet No. 6 of the Pike patent does not show, does it, the lower pressure roller, bearing against the platen, or the oscillating spring-held frame of said lower pressure roller that you have testified was in the manufactured machines of the 4000 series?

A. No, it does not; I overlooked these features in answering the question.

R-X-Q. 220. Nor does it show either the doubly-toothed disks or the knurled metal rollers on the feed shaft, the patent, of course, specifying that the reference letter "M" indicates a rubber-faced roller?

A. The features referred to in the question, except as to the lower pressure roller, would hardly be noticed without comparing the drawings with the reference letters.

R-X-Q. 221. Sheet 6 of the Pike patent does not show the forked flat spring member, bearing against an end roller on the feed shaft, does it?

A. Unless it is referred to by a designating letter, I don't locate it.

R-X-Q. 222. The sheet No. 6 of the Pike patent does not show any of the series of circular flat paper guides encircling the roller platen?

A. They are not shown on the drawing that I can see.

R-X-Q. 223. It already appears in evidence in this case that the equipment of tools furnished the English company for the manufacture of Burroughs machines,

Deposition of Defendant's Witness, Edmund G. Langhorne, stipulated in from Burroughs case.

for a sum said to have been about $36,000, did not include tools for the manufacture of broad frame mechanism. This is your understanding also, is it not?

A. I did not testify to that effect. I am not clear as to whether the sum of $36,000 paid for the plant covered the cost of the tools to manufacture the broad frame, and in view of the fact that the contract was placed early in 1897, it probably did not.

Examination of witness closed.

EDMUND G. LANGHORNE.

NEW YORK, June 6, 1908, 9:30 A. M.

Met pursuant to adjournment.

Present as before.

Deposition of Defendant's Witness, John T. Langhorne, stipulated in from Burroughs case.

JOHN T. LANGHORNE, a witness produced on behalf of defendant, being duly sworn, deposes and says, in answer to interrogatories by Mr. Rector:

Q. 1. How old are you, Mr. Langhorne, and where do you live?

A. Forty-five years old, and reside in Orange New Jersey.

Q. 2. What is your occupation?

A. Manufacturer.

Q. 3. Where were you living and what was your occupation during the years 1897 and 1898?

A. I lived in St. Louis the greater part of 1897, and until the early part of March, 1898, at which time I went to England to live.

Q. 4. What was your occupation at St. Louis in 1897 and the early part of 1898?

A. I was assisting Mr. E. G. Langhorne, then general manager of the American Arithmometer Company.

Deposition of Defendant's Witness, John T. Langhorne, stipulated in from Burroughs case.

Q. 5. And for what purpose did you go to England in March, 1898, and what was your occupation there?

A. I accepted a position as general manager for the Burroughs foreign company, known as the Burroughs Adding & Registering Machine Company, Limited.

Q. 6. In what way, if at all, are you related to Mr. E. G. Langhorne, who was general manager of the American Arithmometer Company in 1897?

A. I am a brother.

Q. 7. Do you recall a trip which Mr. E. G. Langhorne made to England in the spring of the year 1897?

A. I do.

Q. 8. Who had charge of the management of the affairs of the American Arithmometer Company at St. Louis during his absence?

A. I did, with the assistance in a way of Mr. Metcalff.

Q. 9. I show you some original letters, which are in evidence in this case, written by the American Arithmometer Company to Edward Rector, at Chicago, Illinois, and bearing dates April 5, 1897; May 1, 1897; May 5, 1897; May 12, 1897; May 19, 1897; June 1, 1897, and June 14, 1897. Each of these letters is signed by the American Arithmometer Company, per "E. G. Langhorne, Secretary," and the signature to each of the letters, excepting that of May 1, 1897, is followed by the initial "J." Will you please examine those letters and see whether you recognize the handwriting in which the name "E. G. Langhorne" is signed to each of those letters, and if so, state whose it is?

A. They are all signed by myself.

Q. 10. The first of these letters, dated April 5, 1897, refers to a broad printing frame attachment for the Burroughs adding machine, or to a Burroughs machine povided with such printing attachment, which had been sent to Chicago by the American Arithmometer

Deposition of Defendant's Witness, John T. Langhorne, stipulated in from Burroughs case.

Co. prior to the date of the letter; and the letter of May 19, 1897, refers to a second machine with a broad printing frame attachment, which the letter states would be sent to Chicago the following day; both of said machines to be used by Mr. Rector in connection with the preparation of an application for a patent. Do you recall having sent any such machines to Chicago during the time you were in charge of the affairs of the American Arithmometer Company, at St. Louis, while your brother was in England?

A. I do.

Q. 11. And do you recall having written the letters concerning them, to which your attention has been called?

A. I also recall the letters.

Q. 12. Do you also recall having sent any such Burroughs adding machine, with a broad printing frame or wide paper carriage attachment, to your brother while he was in England in the spring of 1897?

A. I recall having shipped a machine with broad carriage attachment to W. J. Cannon, Lincoln, England, during Mr. E. G. Langhorne's visit to England in the spring of 1897.

Q. 13. I show you what purports to be copies of two cable messages sent from St. Louis to "Langhorne, London," the first dated April 10, 1897, and reading: "Broad Frame next Wednesday," and the second dated April 15, 1897, and reading: "Broad frame expressed today." Do you recall having sent any such cable messages to your brother, Mr. E. G. Langhorne, while he was at London in the spring of 1897?

A. I do.

Q. 14. What was the occasion for sending those cable messages?

A. Mr. Langhorne was awaiting the arrival in England of the machine with the broad carriage on it.

Deposition of Defendant's Witness, John T. Langhorne, stipulated in from Burroughs case.

Q. 15. I show you what purports to be an original letter, signed by "Jno. T. Langhorne," dated Washington, D. C., Jan. 19, 1898, written on the letter-head of "Riggs House" of that city, and addressed to "E. G. Langhorne, Esq., #2102 Wash St., St. Louis, Mo." Will you please examine that letter and state whether or not you recognize it, and if so, what it is?

A. I recognize the letter as one written by myself while on a trip to Washington, and which trip I recall being about the date of this letter.

Q. 16. I call your attention to the first paragraph of this letter, reading as follows:

> "I have been very busy all day having called on a number of the banks and departments here, at which places, the broad frame machine met with great favor. I first exhibited it at the Riggs National and believe that I will succeed in selling Mr. Brice two. While they are not willing to give up the Chicago machine, Mr. Brice is very much pleased with the work of our broad frame and I have an appointment to meet him tomorrow at eleven o'clock, at which time I hope to get an order for two machines."

Do you recall the facts referred to in this part of your letter?

A. I do.

Q. 17. What was the "broad frame machine" mentioned?

A. It was a Burroughs machine with the broad printing carriage attachment.

Q. 18. Similar to the Burroughs machines with such attachments which you had sent to Chicago and to Mr. Cannon in the spring of 1897?

A. Substantially so.

Q. 19. Do you recall exhibiting this broad frame machine to prospective customers of adding machines at Washington in January, 1898?

Deposition of Defendant's Witness, John T. Langhorne, stipulated in from Burroughs case.

A. I do.

Q. 20. Do you recall what sort of a reception it met with, or what interest in it was taken by the persons to whom you exhibited it?

A. My recollection is that they thought favorably of the device.

Q. 21. Did you demonstrate the operation and work of the machine to the persons to whom it was exhibited?

A. I did, in a limited way, the parties only giving me a short time in which to bring the machine before them.

Q. 22. What did you do with the machine upon leaving Washington?

A. I can't recall now whether I left the machine there or shipped it away, but my impression is I shipped it away from Washington.

Q. 23. Do you recall where you went from Washington before returning to St. Louis?

A. To New York, I think.

Q. 24. Do you remember whether or not you had the machine with you in New York on that occasion?

A. I do not.

Q. 25. Do you recall having sent any broad frame Burroughs adding machine to Mr. Manny, or the New York office of the American Arithmometer Company, about the time of the return of Mr. E. G. Langhorne from England, in the spring of 1897?

A. I recall one having been shipped to New York about that time.

Q. 26. Do you remember what the occasion was of sending such machine to New York at that time?

A. I do not, unless it was to show Mr. Manny what we were doing in this direction.

Q. 27. Who was Mr. Manny, and what was his business at that time?

A. Sales agent for the American Arithmometer Company, eastern territory.

Deposition of Defendant's Witness, John T. Langhorne, stipulated in from Burroughs case.

Q. 28. Do you know what Mr. Manny's business is at the present time, and where he is?

A. At present I believe he is not actively engaged in any business, being abroad on a vacation of some months. His business is largely adding machines.

Q. 29. With what adding machine business is he connected?

A. The Pike adding machine.

Q. 30. I show you what purports to be an original telegram sent from New York, January 31, 1898, to American Arithmometer Co., St. Louis, Mo., signed "Manny," and reading as follows:

> "Express broad frame model to Cambridge Gas Light Company, Cambridge, Mass., for exhibition and return. Do this immediately or Comptograph wins."

Is there anything about or upon this telegram which enables you to identify it and say what it is?

A. The date of shipment of machine to Cambridge, number of machine, etc., is in my writing.

Q. 31. Do you refer to the matter written in blue pencil on the back of telegram, and to the blue pencil notation "1/31/98," on the face of the telegram?

A. I do.

Q. 32. When did you write that matter in blue pencil on that telegram?

A. My recollection is, as of the date the memorandum bears.

Q. 33. I call your attention to a blue pencil memorandum attached to this telegram, and reading as follows:

"2-4-98

Deposition of Defendant's Witness, John T. Langhorne, stipulated in from Burroughs case.

Ship
Brd. Frame Mch. # 1951
to Cambridge Gas L. Co.
Cambridge
Mass.

Shipped
2/4/98
C
Nat X—Pd. Chg. *W B M*"

Will you please state whether you recognize the handwriting of that memorandum, and if so, state whose it is?

A. I recognize the handwriting as being my own, with the exception of the words "Shipped 2/4/98."

Q. 34. In whose handwriting are the words and figures last referred to in your answer?

A. Mr. Tyler's.

Q. 35. When, with reference to the date it bears, did you write this memorandum, and what was the memorandum for?

A. The memorandum was shipping instructions for Mr. Tyler, and I should say I wrote it on February 4, 1898, the date it bears.

Mr. RECTOR: I offer in evidence the telegram and memorandum identified by the witness, and ask to have the same marked, respectively, "Defendant's Exhibit Manny Telegram," and "Defendant's Exhibit Langhorne Memorandum."

I also offer in evidence the letter identified by the witness in response to question 15, and ask to have the same marked "Defendant's Exhibit Langhorne Letter."

Direct examination closed.

Cross-Examination by Mr. Clarke.

X-Q. 36. Mr. Langhorne, when you showed a broad frame machine to parties in Washington, in January, 1898, they felt, did they not, that it would be a very

Deposition of Defendant's Witness, John T. Langhorne, stipulated in from Burroughs case.

great advantage to use a sheet of paper in a listing adding machine instead of the ordinary roll of paper?

A. They considered this feature, I believe, an improvement.

X-Q. 37. That is, they thought the sheet of paper would be more convenient to handle and file than were the narrow strips of roll paper?

A. Yes, for filing purposes.

X-Q. 38. So far as you know, how did the paper feeding mechanism in this broad frame machine behave as compared with that of the manufactured broad frame machines of the 4,000 series, put out by the Arithmometer Company later in 1898?

A. My recollection is that the results obtained were practically the same.

X-Q. 39. But how did the behavior of the paper feeding mechanism compare with that of the said manufactured machines in respect to satisfactoriness of operation, so far as you know?

A. The results were more satisfactory later on when the devices were produced in a manufactured way.

X-Q. 40. After you had shown this machine to the parties in Washington, as you have testified, did you personally have any further connection with, or direct personal knowledge of, its use in service by these parties or any others, or did you simply leave it in Washington, as you have testified?

A. My knowledge of the performance of these devices about the time of my visit to Washington, was rather limited, and as I sailed for England early in March, 1898, I did not again meet the Washington parties in connection with my call on them of January, 1898.

X-Q. 41. Mr. Langhorne, did the English Burroughs company, with which you say you were connected, own any foreign patents on a broad frame machine in 1897 or 1898, that you know of?

Deposition of Defendant's Witness, John T. Langhorne, stipulated in from Burroughs case.

A. I am not sure, as I do not know whether they had made application or not.

X-Q. 42. When you went to England in the spring of 1898, did you see there, that you remember, the broad frame machine that you say was shipped to Mr. Cannon, the previous year?

A. I did not. It had been sold prior to my arrival in England, I believe, and I never saw it during my stay in England, that I now recall.

X-Q. 43. Do you positively know that it was sold, or to whom it was sold?

A. I cannot state positively, but have no recollection of having seen the machine during my management of the company's business, which continued until March, 1901.

X-Q. 44. What was Mr. Cannon's business?

A. A leather tanner.

X-Q. 45. Was he acting as a promoter for the foreign Burroughs Machine Company at the time the machine was sent him?

A.. I believe he was.

X-Q. 46. Do you know anything of what personal profit he received for promoting the foreign company?

A. Only in a general way. I understood during my stay in England that Mr. Cannon received some interest in the company later formed in consideration of his services, but just what interest I cannot state.

X-Q. 47. It was considerable, as you understood?

A. I should saw a modest sum.

X-Q. 48. About how much do you mean?

A. Twenty thousand dollars.

X-Q. 49. You are not, then, able to positively state that the aforesaid machine sent to Mr. Cannon was afterwards sold, but you suppose it was, merely because you saw nothing of it while you were in England with the English company?

Deposition of Defendant's Witness, John T. Langhorne, stipulated in from Burroughs case.

A. I cannot positively say that it was sold, but I am under the impression that it was sold, as it was not in the factory.

X-Q. 50. Where were you between the spring of 1897, at which time you have said you were in St. Louis, and January, 1898?

A. My recollection is that I spent most of the time between the periods mentioned in St. Louis.

Examination of witness closed.

JOHN T. LANGHORNE.

It is stipulated by and between counsel that the original paper exhibits introduced in evidence in connection with the foregoing depositions may be retained in the possession of counsel, and that examiner's copies thereof may be substituted and filed and used in lieu of the originals.

IN THE CIRCUIT COURT OF THE UNITED STATES, NORTHERN DISTRICT OF ILLINOIS, EASTERN DIVISION.

Comptograph Company, *Complainant,*
vs.
Burroughs Adding Machine Company, *Defendant.*
} In Equity. No. 28,782.

CHICAGO, June 26, 1908.

Introduction of evidence on behalf of the defendant in the above entitled cause, pursuant to informal notice, and by consent, at Room 1625 Monadnock building, Chicago, Illinois, before Louis B. Erwin, notary public, acting by consent as special examiner in said cause, under the equity rule, beginning at 2 o'clock P. M., on Friday, June 26, 1908.

Present: John W. Munday, of counsel for complainant; Edward Rector, of counsel for defendant.

Deposition of Defendant's Witness, Alfred J. Doughty, stipulated in from Burroughs case.

ALFRED J. DOUGHTY, a witness produced on behalf of the defendant, being duly sworn, deposes and says, as follows, in answer to interrogatories by Mr. Rector:

Q. 1. How old are you, Mr. Doughty, and where do you live?

A. Forty years old; I live at Detroit, Michigan.

Q. 2. What is your occupation?

A. Factory manager of the Burroughs Adding Machine Company.

Q. 3. What, if anything, do you have to do with the manufacturing of the Burroughs adding machines made by that company?

A. I have full charge of the plant for manufacturing the Burroughs adding machine.

Deposition of Defendant's Witness, Alfred J. Doughty, stipulated in from Burroughs case.

Q. 4. And they are made under your direction and supervision?

A. Yes.

Q. 5. How long have you been connected with the Burroughs Adding Machine Company?

A. Since September 1, 1906.

Q. 6. What was your occupation prior to that time?

A. I was the factory manager of the Chicago Pneumatic Tool Company, of their Detroit plant.

Q. 7. For what length of time, or between what dates, did you occupy that position?

A. From the early part of 1902 until September, 1906.

Q. 8. What was your occupation prior to the year 1902?

A. I was superintendent of the Boyer Machine Company.

Q. 9. Where was that concern located?

A. It was located at St. Louis up to the fall of 1900, when it was moved to Detroit, Michigan.

Q. 10. How long, and in what capacities were you connected with the Boyer Machine Company?

A. I started with the Boyer Machine Company in 1881, as an apprentice. I filled the positions of apprentice, machinist, draftsman and superintendent.

Q. 11. When did you become superintendent of the Boyer Machine Company?

A. I think it was about 1891.

Q. 12. And you continued in that position down to the year 1902?

A. Yes.

Q. 13. What was the business of the Boyer Machine Company?

A. At the time I started to work with them it was a general jobbing shop; it afterwards developed into a manufacturing plant. In 1902 the business was devoted almost exclusive to the manufacture of pneumatic tools.

Deposition of Defendant's Witness, Alfred J. Doughty, stipulated in from Burroughs case.

During the time I worked for the Boyer Machine Company a great variety of machines was made for inventors, and also a large number of tools were made for various factories in St. Louis, and in connection with the inventions that were made in the shop. We at one time made a great many tools and dies for can factories. We also manufactured bottle molds. We made railway speed recorders; also special tools for making them. Some of the early Burroughs adding machines were also made there and the special tools for making them.

Q. 14. Did you, while superintendent of the Boyer Machine Company, have anything to do with the manufacture of any special tools to be used in the building of Burroughs adding machines?

A. Yes. There were two sets of tools made under my supervision for making the Burroughs adding machine; one set was for the American Arithmometer Company. This set was being made when I took charge of the shop; the other set was made for an English company, and they were shipped to Nottingham, England, about 1897.

Q. 15. Of what did the first set of tools which you have mentioned consist?

A. It was a full set of special tools, consisting of blanking, perforating and performing dies, screw machine tools, milling fixtures, grilling jigs, special wire bending machines, special reamers, taps and counterbores, brass patterns; in fact, everything that was necessary to make the machine in manufacturing quantities.

Q. 16. Of what did the second set of tools, which you say were made for the English company, and shipped to Nottingham, England, in 1897, consist?

A. The second set of tools was a duplicate of the first set, with a number of additions, such as had been added to the first set of tools. There were also some improvements made in the second set of tools. I remember distinctly that we added weight to the suppresses in which

Deposition of Defendant's Witness, Alfred J. Doughty, stipulated in from Burroughs case.

the dies were fitted. This was done to make it a better job than the first set was. Some of the other tools were also improved; in fact, we made almost a complete new set of drawings for the English set of tools.

Q. 17. How complete or incomplete was this last set of tools as a set of tools for the economical manufacture of the Burroughs adding machine in commercial quantities?

A. This set of tools was very complete. I remember distinctly of entering in a factory book a list of all the parts of the Burroughs adding machine at that time, and afterwards filling in the necessary tools for making each individual piece. These tools were all made up and the items were checked off in this book while they were being packed for shipment. We also furnished the standard tools, such as standard taps, reamers and twist drills, all the necessary belting, gasoline cleaning cans, cyanide case hardening outfit; in fact, everything that was in use at that time for making the Burroughs adding machine in St. Louis. We also supplied the necessary machine tools; these, however, were bought from the regular machine tool manufacturers. There were severel punch presses, four or five screw machines, I believe about three milling machines, about four multiple spindle drill presses, one engine lathe, one or two speed lathes, several rough emery grinders; in fact, all the necessary standard machine tools for use in connection with this outfit.

Q. 18. For the manufacture of what style or type of Burroughs adding machine were the two sets of tools which you have described adapted and intended?

A. These tools were intended to make the No. 1 machine and were adapted for that purpose.

Q. 19. Can you produce one of such No. 1 style or type of Burroughs adding machines, for the manufacture of which those tools were made?

A. Yes, I have such a machine here.

Q. 20. The machine which you have produced here ap-

Deposition of Defendant's Witness, Alfred J. Doughty, stipulated in from Burroughs case.

pears to be adapted and intended for the listing of items on a narrow strip of paper carried in a roll at the back of the machine. Are you familiar with Burroughs adding machines equipped with wide paper carriages, adapted to hold a wide sheet of paper and be moved transversely across the machine, for the listing of items in separate, parallel, vertical columns?

A. Yes, I am very familiar with a machine of this description, as we are now manufacturing a great many of this type.

Q. 21. Are you familiar with the necessary special tools and equipment for the manufacture of such wide paper carriage attachments to the Burroughs machine?

A. Yes, I am very familiar with these tools.

Q. 22. What sort of a set of special tools is required for the proper and economical manufacture of such wide paper carriage attachments in commercial quantities?

Mr. MUNDAY: Objected to as immaterial and irrelevant and incompetent.

A. In deciding upon the sort of special tools that should be made for manufacturing a piece of machinery of this description the quantity that is to be made determines, to a great extent, the grade of tools that shall be made. In every case special dies should be made for all sheet metal parts and brass patterns for the cast parts, drilling jigs and milling fixtures wherever there are drilling operations and milling operations.

Q. 23. What sort of a set of special tools do you employ in the factory of the Burroughs Adding Machine Company for the manufacture of the wide paper carriages of the Burroughs adding machines which are equipped with such carriages?

A. We have a very high grade set of tools for this purpose. They are made just about as well as we know how to make them for the reason that we are making these carriages in very large quantities.

Deposition of Defendant's Witness, Alfred J. Doughty, stipulated in from Burroughs case.

Q. 24. How extensive and complete are those tools, and for the manufacture of what quantity of paper carriages are they adapted and intended?

A. We have a complete set of tools, special tools and appliances for making all the parts; also fixtures for assembling the parts. We have made about seventy of these carriages a day with our present set of tools. In order to do this some of these tools are duplicated.

Q. 25. Do you know anything about the cost or value of this set of tools that you have in use at the present time for the manufacture of the wide paper carriages of the Burroughs adding machines?

A. I do not know what these tools cost; they were made before I entered the employment of the Burroughs Adding Machine Company, but I would estimate that they are worth in the neighborhood of $12,000.

Q. 26. You say that those tools are capable of producing the paper carriages for whose manufacture they are intended at the rate of seventy carriages per day. How much would the cost of such a set of tools be reduced if they were required for the production of, say ten carriages per day, instead of seventy?

A. Of course, the same tools could be used for making ten per day, but it is not customary to make such fine tools for this quantity. I believe a set of tools could be made to make these carriages very satisfactorily for three or four thousand dollars at the rate of ten per day.

Q. 27. I may have asked you, if so I will ask you again, what, if anything, you had to do, directly and personally, with the manufacture of the set of special tools that was made for the English company in 1897?

A. These tools were made directly under my supervision and I was thoroughly familiar with all the details connected with it.

Q. 28. I show you what purports to be a:

Deposition of Defendant's Witness, Alfred J. Doughty, stipulated in from Burroughs case.

"List of General and Special Tools for
BURROUGHS ADDING MACHINE PLANT,
Submitted to
W. J. CANNON.....LINCOLN, ENGLAND.
1897:
Boyer Machine Co.,
St. Louis,
Mo."

said list appearing on pages 687 to 698 of what appears to be a letter-press copy-book of the Boyer Machine Company of the year 1897. Will you please look at that list and state, if you know, what it is?

Mr. MUNDAY: I object to that as incompetent.

A. This is a list of the tools that we made for the English company for making the Burroughs adding machine. I think the original of this was sent to the English company for their approval before the contract was signed. I did not make out the list, but I think it is a copy of one that I made out in the factory.

Q. 29. Do you know what has become of the list which you did personally make out?

A. I believe it is among a lot of old drawings and other papers that I turned over to the Burroughs Company while I was with the Chicago Pneumatic Tool Company, as they had no use for them and were about to throw them out.

Q. 30. When did you last see that list—the one you personally made out?

A. I looked over these old papers two or three months ago and I believe this list was in the package.

Q. 31. Do you think you can have it here for tomorrow's session of your examination by telegraphing or telephoning to Detroit for it?

A. I think I could by telephoning.

Q. 32. I will ask you to do so, and in the meantime I will ask to have the letter-press copy containing the copy submitted to you marked for identification, "Defendant's

Deposition of Defendant's Witness, Alfred J. Doughty, stipulated in from Burroughs case.

Exhibit List English Special Tools." How does this list of tools in this book accord with your recollection of the tools that were actually supplied to the English company?

A. According to my recollection the list of tools is substantially the same as we sent to the English company.

Q. 33. Has your experience in connection with the manufacture of adding machines and special tools for the manufacture of adding machines and other devices been such as, in your opinion, qualifies you to form an accurate judgment and estimate of the cost of special tools necessary for the proper and economical and commercial manufacture of adding machines and similar devices? I mean such as to enable you, upon examining a given adding machine, for instance, to form an accurate judgment as to the cost of the necessary special tools and equipment for the manufacture of such machine?

Mr. MUNDAY: Objected to as incompetent and immaterial and an improper attempt to qualify the witness as an expert.

A. I have done quite a little figuring on special tools on contract work, and usually the company found my figures to be accurate. It was my duty for a number of years to estimate the factory cost on all contract work before the job was accepted.

Q. 34. Did you have anything to do with figuring upon and estimating the cost of the special tools and equipment supplied to the English company in 1897?

A. I figured on all the details connected with this set of tools. I did not, however, make the final figures to the customer.

Q. 35. Do you know how far your figures were relied upon or accepted in estimating the cost of producing that set of tools?

A. I believe that the figures were taken as I gave them

Deposition of Defendant's Witness, Alfred J. Doughty, stipulated in from Burroughs case.

in and a profit added to that. I simply figured what I estimated the cost of the tools would be.

Q. 36. Have you had your attention called to the two machines which are in evidence in this case on behalf of the complainant as Complainant's Exhibit Roll Paper Comptograph and Complainant's Exhibit Felt 1890 Model?

A. Yes, I examined these machines this morning.

Q. 37. Did you examine the Felt 1890 Model sufficiently to enable you to form a judgment as to the approximate cost of building a set of special tools suitable for the proper and economical manufacture in commercial quantities of the transversely movable wide paper carriage which forms a part of this exhibit?

A. I examined this carriage sufficiently, I believe, to make a rough estimate on what a set of tools would cost for its manufacture.

Q. 38. Assuming a concern to be engaged in the manufacture of machines like Complainant's Exhibit Roll Paper Comptograph, what, in your judgment, would be a fair estimate of the cost of the necessary tools for the proper and economical manufacture of wide paper carriages for such machines like the transversely movable wide paper carriage of Complainant's Exhibit Felt 1890 Model?

Mr. MUNDAY: Objected to as incompetent, immaterial, uncertain and indefinite.

A. The quantity to be manufactured would determine, to some extent, what a set of tools would cost for making this carriage. Assuming that they would make them in quantities of about four or five a day, I believe a real good set of tools could be made for this purpose for about $3,000.

Q. 39. And if ten machines a day were required, how much, in your judgment, would that increase the cost of the necessary tools?

Deposition of Defendant's Witness, Alfred J. Doughty, stipulated in from Burroughs case.

A. I should say by adding another thousand dollars they could be made in such quantities in a satisfactory manner.

Mr. RECTOR: I offer in evidence the machine produced by the witness in connection with his answer to question 19, and ask that the same be marked for identification "Defendant's Exhibit Burroughs No. 1 Machine."

Q. 40. Referring to the set of tools which the Boyer Machine Company made for the American Arithmometer Company about the time you became superintendent of the Boyer Machine Company, do you know whether the American Arithmometer Company subsequently used those tools in the commercial manufacture of the Burroughs adding machine?

A. Yes, they did.

Q. 41. To what extent, for how long a time?

A. I cannot very well answer this question in detail, as I was not connected with the company after the tools were turned over by the Boyer Machine Company. I do know, however, that some of them are still in use. No doubt, the majority of them have been worn out and replaced; some of them, I believe, were replaced on account of alterations to the adding machine.

Q. 42. How were the plants of the Boyer Machine Company and the American Arithmometer Company located, in relation to each other, at the time this set of tools was made by the Boyer Machine Company for the other company?

A. The American Arithmometer Company had no plant at that time. Mr. Burroughs was looking after their interests and had office space in the Boyer Machine Company building.

Q. 43. And how long did that continue to be the case after this set of special tools was built for the Arithmometer Company?

Deposition of Defendant's Witness, Alfred J. Doughty, stipulated in from Burroughs case.

A. After these tools were built the Boyer Machine Company built a number of adding machines with the tools and then turned the equipment over to the American Arithmometer Company. The workmen were also transferred to that company. They occupied part of one of the buildings belonging to the Boyer Machine Company.

Q. 44. What opportunity or occasion did you have to observe the use made by the Arithmometer Company of the tools supplied to it by the Boyer Machine Company?

A. I had a very good opportunity to see what was going on as I very often went in to their part of the building at that time.

Q. 45. What was the location of the plants of the Boyer Machine Company and the American Arithmometer Company, in respect to each other, at the time the tools for the English company were built in 1897?

A. The Boyer Machine Company at that time was located at Twenty-first and Wash streets, St. Louis, on the first floor of the building, and the American Arithmometer Company occupied the second floor, same building.

Cross-Examination by Mr. Munday.

X-Q. 1. Some improvements have been made in the machine which has been offered in evidence as "Defendant's Exhibit Burroughs No. 1 Machine," have there not?

A. This is not the first machine that was made. Possibly there are some slight improvements.

X-Q. 2. I see on the plate in the front of this machine, which machine is numbered 1275, that a number of patent dates are put, the machine appearing to be patented August 21, 1888, January 15, 1889, and February 4, 1890. Do the machines now made by the Burroughs Company have a patent mark on it?

A. Yes.

Deposition of Defendant's Witness, Alfred J. Doughty, stipulated in from Burroughs case.

X-Q. 3. What is the current numbers of the machines that are now being issued? I mean the wide carriage machines.

A. I am not very familiar with the numbers, but I believe that they are in the hundred thousand series.

X-Q. 4. Can you find out what patent marks are put upon the machines issued recently by the Burroughs Company, say during the present year, 1908?

A. Yes, I believe I can get that information.

X-Q. 5. Will you please get it and produce it here tomorrow morning?

A. I will endeavor to do that.

Whereupon an adjournment was taken until 9 o'clock A. M., Saturday morning, June 27, 1908.

Saturday, June 27, 1908, 9 o'clock A. M.

Met pursuant to adjournment. Present, as before.

X-Q. 6. Have you the information that I asked you to get, about the list of patents marked on the wide frame machine that the Burroughs Company is now making?

A. Yes, I have such information; I secured it last night.

X-Q. 7. Please give it, together with the number of the machine from which it was taken.

A. Machine No. 108,173, patented August 21, 1888, January 15, 1889, February 4, 1890, September 12, 1893, September 28, 1897, December 13, 1898, December 21, 1897, and other patents pending.

X-Q. 8. I believe you said that Mr. Boyer made two sets of these special tools. For whom did he make the first set?

A. The American Arithmometer Company.

X-Q. 9. Was this first set to be used by the American Arithmometer Company in the first instance, or was it to be used in the first instance by the Boyer concern?

Deposition of Defendant's Witness, Alfred J. Doughty, stipulated in from Burroughs case.

A. It was to be used by the Boyer Machine Company.

X-Q. 10. At the time the Boyer Machine Company made this first set of special tools it either had a contract to build the adding machines for the American Arithmometer Company, or expected to get such contract; is that right?

A. My recollection is that the Boyer Machine Company had a contract at that time to make the special tools and also to make 100 adding machines. In fact, the machines were being made at the same time that the tools were being made.

X-Q. 11. How long did it take the Boyer Machine Company to finish this combination job? State how long it was from the time the Boyer Machine Company began to make the special tools to the time when the last one of the 100 machines was completed.

A. I do not recall just how long this took, but I think it was more than a year.

X-Q. 12. When the Boyer Machine Company came to make the second set of the special tools, it had the benefit of the experience acquired by making the first set, did it not, and the benefit of the experimentation and trying out the first set? Is that right?

A. Yes.

X-Q. 13. Does it cost more or less to make a second set of special tools than it costs to make a first set of special tools intended for the same machine?

A. If they were made precisely the same it would take less time to make the second set.

X-Q. 14. Did it take less time to make the second set of the tools that I have been inquiring about?

A. I think it took less time, but it was a better set of tools and I am of the opinion that they cost as much or more, for the reason that we had more men working on the job.

Deposition of Defendant's Witness, Alfred J. Doughty, stipulated in from Burroughs case.

X-Q. 15. Does it cost more to make tools with more men than with less men?

A. Not necessarily. If you have more men on the job you can produce the tools in a shorter space of time.

X-Q. 16. When you came to make the second set of tools did you have on hand any special tools or implements that had been constructed for the purpose of aiding in the making of the first set of special tools; such, for example, as hobs, master-plates, patterns, forming tools for automatic screw machines, counter-bores, etc., etc.?

A. I don't believe that we had but very little in this line. We no doubt had a few patterns which were made of wood. I do not recall that there were any hobs used on the job. There were no automatic screw machines furnished with this equipment. I remember distinctly that we made a complete set of new patterns for making the sub-presses for all the dies on this job.

X-Q. 17. What became of the old patterns?

A. In making up this set of tools we endeavored to make it better than the previous set that was made. The sub-presses on the last order were made very much heavier and for that reason the old patterns could not be used.

X-Q. 18. I see on this list the general tools submitted to W. J. Cannon following items: "3 # 2 Pratt & Whitney Screw Machines with improved hardened chucks." Were those three Pratt & Whitney screw machines sent to England with this job?

A. Yes, they were sent to England.

X-Q. 19. Did you furnish the requisite special tools to be used in making parts of the adding machine and that were to be used in these two machines, and if so, did you have any formers for forming these special tools?

A. No, these tools were made by hand.

X-Q. 20. I see there is listed a number of dies for

Deposition of Defendant's Witness, Alfred J. Doughty, stipulated in from Burroughs case.

forming various parts of the adding machine. What sort of guides, patterns or templets did you use in making these dies in the second set?

A. I think in a majority of cases we had the figures to go by. There were a few of them which were made from samples taken from the sample machine. The same method was used in making the first lot.

X.Q. 21. Just describe the method that you used in making the first lot, where you got the shapes, the sizes and the contours; I mean what did the tool-maker have to refer to in making the first lot?

A. He had a sample machine to work from on the first lot, and we used the parts of the sample machine.

X-Q. 22. Who made that sample machine?

A. I did quite a little of the work on that machine myself, under the direction of Mr. Burroughs.

X-Q. 23. Did the die-maker pull this machine to pieces, this sample machine, and use the parts as templets in making the dies?

A. We had a complete set of templets for the flat work and this was used for making the dies. These were made and used for making the sample machine. I believe, however, we did tear the machine apart and use the parts that were formed for making the forming dies where we had no figures.

X-Q. 24. Then the fact is that you did have templets to use in making the first set of dies; is that so?

A. Yes, we used the same templets that were used for making the first machine.

X-Q. 25. And did you charge the American Arithmometer Company for these templets in the job for making the first machine or in the job for making the dies?

A. The American Arithmometer Company made their own templets. The manner in which this was handled while they were doing their experimental work was to

Deposition of Defendant's Witness, Alfred J. Doughty, stipulated in from Burroughs case.

arrange with Mr. Boyer to have me work for Mr. Burroughs. The Boyer Machine Company, however, paid my salary and the Arithmometer Company reimbursed the Boyer Machine Company for my services and the use of the tools.

X-Q. 26. And you used these templets to guide you in making the first machine, and also to guide the die-makers in making the dies for the first special lot of tools, and the die-makers in making the second lot of tools; is that right?

A. No, I do not believe the same set of templets was used for the second set of tools. My recollection is that these were made from sample parts of the adding machine as they were made at that time, for the reason that there were, no doubt, more or less changes during the four or five years that had elapsed between the first and second lot of tools.

X-Q. 27. You have spoken already about some subpress patterns. I will ask you now about the patterns for the castings of the frame of the machine and of the case of the machine and for the governor cylinder, etc., etc. Did you use the old patterns or did you make new patterns in respect to these parts to furnish to Mr. Cannon?

A. I am quite sure that we made new patterns for this work. Wood patterns that had been stored for four or five years, as a rule, are either lost or broken so badly that they cannot be used. There were probably changes also that would necessitate having them made over. The side frame pattern was made of sheet metal and for this we require no wood pattern. It is what we call a built-up pattern.

X-Q. 28. How much did it cost to make this side frame pattern out of sheet metal?

A. There are two of these, rights and lefts, and I have

Deposition of Defendant's Witness, Alfred J. Doughty, stipulated in from Burroughs case.

an idea that it cost, probably, between $75 and $100 a piece to make them.

X-Q. 29. What sort of patterns for the side frames could be used in connection with the first set of special tools?

A. They were made in the same manner. We recently made a set for our present machine and they were also made in the same manner.

X-Q. 30. Are those three sets of patterns in existence, the one for your present machine, the one for the machine built for the first set of tools?

A. I do not know whether they are in existence or not, but I believe they are.

X-Q. 31. Now, Mr. Doughty, if it cost from $150 to $200 to make a set of patterns of the kind you speak of, why should you make a new set of patterns at such a cost for Mr. Cannon, if you could do without them?

A. We didn't consider that we could do without them.

X-Q. 32. Why could you not do without them?

A. It was necessary to have these patterns in order to make the castings for the machine, and it was a part of the regular equipment.

X-Q. 33. Did you make a change in these frames from the form that was being used by the American Arithmometer Company at that time?

A. I think not.

X-Q. 34. You had access to the Burroughs adding machine, did you not, and could have obtained the side frames from the Burroughs Company long enough to use them to make castings from?

A. We could have done this, but you evidently don't understand that you cannot reproduce a brass pattern by casting. In casting brass the metal shrinks after it is poured and it will not then be of the proper shape.

Deposition of Defendant's Witness, Alfred J. Doughty, stipulated in from Burroughs case.

That is why we made the pattern the same manner in which the first one was made.

X-Q. 35. Oh, yes, but what is to hinder making a brass pattern and penning it out to the right size? You understand that method, don't you?

A. That is a method used in making up cheap patterns. We were making a pattern that would be accurate and produce a casting as nearly like those that were in use at that time as we possibly could. Should I have the job to do over again I would do it in exactly the same manner.

X-Q. 36. I notice on this machine that has been offered in evidence by the defendant that the side frame does not seem to have been cast very accurately; one of the bosses is very much out of place—say a sixteenth or an eighth of an inch—judging by the position of the shaft that has a bearing in it. How do you account for that?

A. The boss you refer to is probably out a little over a thirty-second of an inch. Should the pattern have been made inaccurately, possibly it would have been out more. No matter how accurate the patterns are made the castings will vary slightly. The shrinkage on cast iron or any other metal is not always exactly the same. Furthermore, the molders are sometimes careless, and that affects the casting to some extent. Then, again, after the casting is made, in drilling the part, they do not always locate it exactly in the drilling jig. But from the experience I have had I have always found it best to make the pattern just as accurate as possible and have all the variations eliminated from that source.

X-Q. 37. Referring again to this machine; at the foot of this machine is a series of pinions, the teeth of which engage a series of tooth segments. Was that mechanism in the first machine for which the first set of special tools was built?

Deposition of Defendant's Witness, Alfred J. Doughty, stipulated in from Burroughs case.

A. Yes.

X-Q. 38. How did you make those pinions and those tooth segments?

A. They were stamped out with dies.

X-Q. 39. How did you get the patterns or templets for those dies in the first set of special tools?

A. For the pinion I do not think we had any pattern or templet. The punch was milled on an ordinary milling machine using a gear cutter in connection with a dividing head. The die for forming the teeth on the sector was made in the same manner. They were first blanked, however, and I believe we had a templet for this purpose.

X-Q. 40. Now, Mr. Doughty, you used a cutter in this milling machine for cutting the teeth of the pinion punch and the teeth of the sector punch, and there would be a different cutter for each, would there not?

A. Yes.

X-Q. 41. Now, please state whether these cutters were of the standard shape or of a special shape? By standard shape I mean cycloidal, and by special shape I mean some other shape than cycloidal, and which would have to be specially made.

A. These cutters were specially made by the Brown & Sharpe Manufacturing Company, and I believe were made for the American Arithmometer Company. They were used in making the sample adding machine.

X-Q. 42. And did the Boyer Manufacturing Company use these same set of special cutters in making the second set of special tools for Mr. Cannon?

A. I believe they were used in making both the first and second set of tools.

X-Q. 43. In making the tools for the first set did you make any molds for molding the key tops?

A. No, I think not. I believe these were made by the company that made the key tops for us.

Deposition of Defendant's Witness, Alfred J. Doughty, stipulated in from Burroughs case.

X-Q. 44. And Mr. Cannon, I suppose, also got his key tops from the same source, did he?

A. I believe he did. In fact, I think they still get them from the same place when he makes a repurchase of key tops.

X-Q. 45. Now, Mr. Doughty, when the American Arithmometer Company first ordered a set of these key tops it had to pay for the cost of making the key-top molds, nine different molds with the nine digits, one on each key top. Is that so?

A. No doubt they had to pay for the molds on the first order; I do not recall it, however.

X-Q. 46. And Mr. Cannon would not have to pay this extra amount, would he?

A. I do not know what he had to do in regard to that.

X-Q. 47. At any rate, it is not charged in the list of special tools furnished to him, is it?

A. No.

X-Q. 48. Now, in the same manner, how is it about the molds for printing type that were used in making this first set of machines of the first set of special tools?

A. The molds for this, as I recall it, were not made by the Boyer Machine Company. The type at that time were made at a regular type foundry in St. Louis. I believe the American Arithmometer Company had this work done while they were experimenting on the machine.

X-Q. 49. The American Arithmometer Company were obliged to have a special mold or set of molds made for this purpose by a type foundry, were they not, and pay for that mold with its first order for type?

A. I think that it what they did.

X-Q. 50. In making this second set of special tools did you make a new pattern for the hand lever or use the old one?

A. I don't know whether we did or not. Possibly we

Deposition of Defendant's Witness, Alfred J. Doughty, stipulated in from Burroughs case.

used the pattern that was then used by the American Arithmometer Company to make a brass casting for our pattern.

X-Q. 51. How about the pattern for the case?

A. I think we made a new pattern for this.

X-Q. 52. How about the patterns for the governor or dash-pot?

A. These, I think, were made of hard wood and for that reason we did not make a casting, which we probably could on a piece of this size. The idea of making these of hard wood was to make them light. The foundry seemed to prefer hard wood at that time to metal on a casting of this nature. This was an entire new set.

X-Q. 53. Did you examine the Complainant's Exhibits Roll-Paper Comptograph and Felt's 1890 Model sufficiently to be able to state exactly what difference there is between the two and how far this difference extends?

A. I could not explain in detail the difference between the two machines. My attention was called particularly to the carriage on the 1890 Model and the manner of handling the paper on the other model. In a general way I understand this pretty well.

X-Q. 54. You are not able to state, are you, how far it was necessary to modify, if at all, the roll-paper comptograph in order to enable Mr. Felt to combine the wide-framed carriage with it, are you?

A. I could not give all the details necessary, but from the examination I made I should judge that there would be very little expense attached to doing this work. The bulk of the expense would be in equipping to make the carriage.

X-Q. 55. I suppose you noticed that the 1890 Model, so far as the carriage is concerned, and its parts, was a hand-made machine, was it not?

A. It looked as though it might have been made by hand.

Deposition of Defendant's Witness, Alfred J. Doughty, stipulated in from Burroughs case.

X-Q. 56. Did you further notice that the roll-paper comptograph was also largely a hand-made machine?

A. I did not see the inside of this machine and I do not know. The machine that had the wide carriage or what is called the 1890 Model appeared to be the same as the other machine except the carriage and its connections.

X-Q. 57. Could you tell by an examination of the roll-paper comptograph and the 1890 Model whether or not both were largely hand-made as contradistinguished from die-made work? I refer especially to the back end of the machine where the parts are easily visible in both cases.

A. No doubt I could have done this had I looked for it, but I did not examine the parts close enough to determine in what manner they were made. On the roll-paper machine there are very few parts in connection with the paper-handling mechanism that can be made with dies.

Whereupon an adjournment was taken until Tuesday morning at 10 o'clock A. M., June 30, 1908.

June 30, 1908, 10 o'clock A. M.

Further adjournment taken to July 2, 1908, at 10 o'clock A. M.

July 2, 1908, 10 o'clock A. M.

Met pursuant to adjournment. Present as before.

Cross-examination resumed:

X-Q. 58. You mentioned the circumstance that you did work for Mr. Burroughs. Was that the Mr. Burroughs who was the inventor and patentee of the machine which has been offered in evidence for defendant?

A. Yes.

X-Q. 59. What kind of work was it you did for Mr. Burroughs?

A. Mechanical work; I made the parts of the sample machines he had made.

X-Q. 60. Did you do any work for Mr. Burroughs on a sample machine like this exhibit in evidence.

Deposition of Defendant's Witness, Alfred J. Doughty, stipulated in from Burroughs case.

A. Yes.

X-Q. 61. Did you do any work for Mr. Burroughs in the way of applying a wide-frame carriage to that machine?

A. No.

X-Q. 62. Who did that work?

A. I believe that work was done by Mr. Pike and his assistants.

X-Q. 63. When was that done?

A. I don't recall just when that work was done, but believe it was done in the building on the 21st and Wash streets, St. Louis, and it was no doubt 1895, or after that time.

X-Q. 64. Was it before or after you made the set of special tools for the American Arithmometer Company?

A. I believe it was after the set of tools was made.

X-Q. 65. Was it before or after you made the set of special tools for Mr. Cannon?

A. I believe it was after this set of tools was made.

X-Q. 66. Was it before or after Mr. Burroughs' death?

A. I do not know whether it was made before Mr. Burroughs' death or not.

X-Q. 67. Did you see that machine when it was first completed? I mean, as it was first completed?

A. I believe I did. I remember seeing some of the parts while it was being made.

X-Q. 68. In what material way, if any, did it differ from the machine shown in Pike patent No. 595,864?

Mr. Rector: The question is objected to as indefinite for the reason that the record in the case shows that the Pike patent referred to exhibits two different constructions, and it does not appear which one counsel is inquiring about.

A. I had so very little to do with the work at that time that I would not be able to give an opinion on this.

Deposition of Defendant's Witness, Alfred J. Doughty, stipulated in from Burroughs case.

I simply saw the work, but had nothing to do with the making of the carriage.

X-Q. 69. Was it in a complete and operative state when you saw it? I mean the machine.

A. I believe it was.

X-Q. 70. Would it add numbers and print the numbers in columns on a wide sheet of paper?

A. I think it would; that was the object, I believe, in making this wide carriage.

X-Q. 71. Did you understand this was the invention of Mr. Burroughs or of Mr. Pike? I refer to the machine that you saw.

A. I understood it was Mr. Pike's invention.

X-Q. 72. Did you see a machine invented by Mr. Burroughs having a wide frame?

A. I believe I did see a machine at one time made by Mr. Burroughs, equipped with a wide carriage.

X-Q. 73. When was that, Mr. Doughty?

A. I don't recall just when it was, but it was prior to the time that Mr. Pike made his carriage.

X-Q. 74. Did you see that machine operated?

A. I am not quite sure whether I did or not.

X-Q. 75. Did you do any work on that machine yourself?

A. No.

X-Q. 76. Who did the work on that machine?

A. I don't recall who did it.

X-Q. 77. Where was the machine when you saw it?

A. I don't recall that.

X-Q. 78. Are you sure it was not in the shop of the Boyer Machine Company?

A. It may have been in the Boyer Machine Company's shop, but I think it was probably made by the American Arithmometer Company, for the reason should it have been made in the Boyer Machine Company's shop I would remember more about it.

Deposition of Defendant's Witness, Alfred J. Doughty, stipulated in from Burroughs case.

X-Q. 79. Did you go and look at that machine?

A. I said that I thought I had seen it, and necessarily I would have to go and look at it.

X-Q. 80. Did you go and look at that machine at any time after you first saw it?

A. I do not know whether I did or not.

X-Q. 81. Can you remember the construction of that machine now in any way? If so state what you can remember of it.

A. I can only remember the manner in which this carriage was to be operated in moving it across the machine; this was arranged to be done with a lever that extended under the machine, and a handle in the front of it; the details of the rear of the machine I do not remember.

X-Q. 82. Can you give any nearer approximation to the date of this old Burroughs machine with the wide carriage?

A. About the best I can do is to state that I believe it was made between the time the first set of tools was made and the second set of tools.

X-Q. 83. Now, do you refer to the Pike machine or the Burroughs machine with the wide carriage?

A. I refer to the Burroughs machine.

X-Q. 84. Can you state when this second lot of special tools was made? I mean the lot that was made for Mr. Cannon?

A. I believe these were made in 1897.

X-Q. 85. Was this Burroughs machine built before the Boyer Manufacturing Company moved from Dixon street to Wash street?

A. I don't know.

X-Q. 86. When did the Boyer Manufacturing Company remove from Dixon street to Wash street?

A. I think it was in 1895.

Deposition of Defendant's Witness, Alfred J. Doughty, stipulated in from Burroughs case.

X-Q. 87. And the first set of special tools, those for the Arithmometer Company, was that set built before you removed from Dixon street?

A. Yes.

X-Q. 88. How long before?

A. Several years.

X-Q. 89. Do you know when Mr. Burroughs died?

A. I believe it was in 1898.

X-Q. 90. Did the Boyer Machine Company make more than one lot of a hundred machines for the Arithmometer Company?

A. I believe they did.

X-Q. 91. How many different lots after the first lot?

A. I don't believe they made over one more lot after the first lot.

X-Q. 92. You say it took about a year to make the first lot, from the time the special tools were started until the last machine of the lot was finished; now how long did it take to make the last lot of a hundred machines by the Boyer Company?

A. I think it took more than a year to make the first lot and the tools; I don't recall how long it took to make the second lot.

X-Q. 93. About how long would you say, in the ordinary course of things, it should or would have taken the Boyer Company to make the last or second lot of 100 machines, after the tools for that work had been completed?

A. It would probably take four or five months to do this work, depending upon the length of time it would take to get the material and get things under way. At the present time it takes us about a year to complete machines from the start to finish; we are now, however, making the machines on a very much larger scale; some of the parts, in fact, a great many of them, are made up in lots sufficient to last for a year. I believe at the time

Deposition of Defendant's Witness, Alfred J. Doughty, stipulated in from Burroughs case.

these early machines were made we experienced quite a little difficulty in getting material, which caused some delay.

X-Q. 94. The method of using special tools for the making of parts is to manufacture a considerable number of the parts in advance of assembling any of them into the machine; is that true?

A. Yes.

X-Q. 95. Please explain the economical reasons for this, Mr. Doughty?

A. The purpose of special tools is to make parts in quantities, and I do not know of any other explanation to make.

X-Q. 95*a*. I suppose that where you have special tools to make a particular part, as, for example, dies to which the blank or material is subjected in succession for all the necessary operations of making the part, that it is necessary to set these dies into position and get them into working condition, and that this is a considerable part of the labor of making the thing to be manufactured. And that if this cost is divided among a large number of the articles it will be less; is that the reason parts are made in quantities?

A. That is true to some extent, but it does not apply to dies particularly. On the old method of making dies it was necessary to spend considerable time in setting them; the dies that were made and supplied on this adding machine outfit were not of that kind. They were assembled in sub-presses and it was a very easy matter to place them in the punch-press.

X-Q. 96. But it took some time to adjust the sub-presses of which you speak, and if you had to bring out and put into place the sub-press for the production of each part for each machine in the lot of a hundred machines, that would be a considerable labor, wouldn't it?

Deposition of Defendant's Witness, Alfred J. Doughty, stipulated in from Burroughs case.

A. Yes.

X-Q. 97. You say that in this economic rule which requires the manufacture of parts in quantities does not specially apply to dies of the kind you furnished to Mr. Cannon. What does it particularly apply to?

A. When you asked about quantities I didn't suppose you referred to one piece. I undertook to answer the question as though you meant the difference between perhaps a thousand pieces and a hundred thousand pieces. These dies as we made them can be set in the punch-presses in about fifteen minutes' time; that is not considered much time in setting tools. In making parts on screw machines it sometimes take four or five hours to get the tools in working order and there would be no economy in making a very small number of pieces.

X-Q. 98. Now take such an instance as you have suggested, that a part should be made on a screw machine, and let us say it is a part of which only one is required in a machine, a pin or a screw. Please state how long it would take to run out a hundred parts after the screw machine is set and in working order?

A. It would not take very long to set a screw machine for a pin or a screw, and it would turn out an ordinary pin; 100 could be made in an hour very easily.

X-Q. 99. Take the instance of a part for which it required four or five hours to get the screw machine into working order, how long would it require, in the ordinary course, to run out a hundred of those parts after the screw machine was in working order?

A. That, of course, would depend entirely upon the nature of the piece. We have some parts that we make that would take two days to turn out a hundred pieces.

X-Q. 100. And how long would it require to set the screw machine in good working order?

A. Half a day.

Deposition of Defendant's Witness, Alfred J. Doughty, stipulated in from Burroughs case.

X-Q. 101. And it sometimes happens that there is a part that requires four or five hours to get the screw machine into working condition, where a hundred such parts could be turned out in less than an hour; is that true?

A. That may be true also.

X-Q. 102. Now I suppose in order to use special tools in the manufacture of adding machines it is necessary to have a shop in which to use them, is it not?

A. Yes, it would be necessary to have a shop.

X-Q. 103. It is also necessary to have pulleys and belts and shafting and other power appliances, or their modern substitutes?

A. Yes.

X-Q. 104. And then one must have a steam engine or some other prime mover or source of power?

A. Yes.

X-Q. 105. And also fuel and oil and shop appliances of various kinds, such as lockers and brooms, etc.?

A. Yes.

X-Q. 106. And you have to have benches for the workmen to use—in short, the shop has to be furnished, does it not?

A. Yes.

X-Q. 107. And you have to hire some men to work in the shop, do you not, all the time that the adding machine is being built. And this time includes that for making all of the parts and also that for assembling the parts into the form of the machine and for adjusting and testing the completed machine, does it not?

A. Yes.

X-Q. 108. And one also has to have a supply of material, metal of different kinds and in different forms, and all of the other material that is consumed in the construction of the machine; is that true?

Deposition of Defendant's Witness, Alfred J. Doughty, stipulated in from Burroughs case.

A. Yes.

X-Q. 109. The amount of money that one would be required, say that Mr. Felt would be required to put into the enterprise of making a wide-frame adding machine such as his 1890 machine which you inspected, would then be made up of the following elements: First, a shop and its furnishings; second, special tools and machinery compiled with a view to the manufacture of a particular article; third, such general tools and machinery as are considered necessary in every machine shop; fourthly, material out of which to make the machines; fifthly, the money with which to pay the workmen their wages while the first lot of machines was being made and until commercial returns were had from their sale, sufficient to carry on the business; sixthly, the expense of rent and power; seventhly, the expense of advertising the machine to the public, and eightly, the expense of selling and collecting the proceeds of the sale; is that about true?

A. That would all be true providing Mr. Felt were not already in the business. But as a matter of fact, all these things would not come as extras for simply applying a new carriage or in a new feature such as this carriage was, to a machine that was already on the market. There is no doubt but that a number of his tools could be used on this work except such parts as would require special tools. The amount of horse power required in addition to what he no doubt already had, would be so small that it would be hard to find.

Recess for lunch.

July 2, 1908, 1 o'clock P. M.

Testimony resumed:

X-Q. 110. Do you know, as a matter of fact, that Mr. Felt was already in business, and that all he had to do

Deposition of Defendant's Witness, Alfred J. Doughty, stipulated in from Burroughs case.

to put the new machine on the market was to get special tools for the parts of the carriage?

A. No, I do not know that.

X-Q. 111. Then, how did you come to testify the way you did testify in answer to cross-question 109?

A. Because I have understood right along that Mr. Felt was in the business of making adding machines prior to that time, but I never saw his factory.

X-Q. 112. As a matter of fact, you do not know whether or not Mr. Felt was in position, at the time he built his 1890 machine, or at any time prior to the time he filed his application for a patent, to make even the roll paper comptograph himself, do you?

A. No, I never saw his factory.

X-Q. 113. And if the Felt roll paper comptograph was manufactured by anybody at that time, you were not in position to say whether it was made and sold at a profit or not?

A. No.

X-Q. 114. Now, Mr. Doughty, whoever manufactured or expected to manufacture the wide paper adding machine like the 1890 Felt machine, would have to have, first, a shop and its furnishings; second, special tools and machinery made with a view to the manufacture of the wide frame adding machine as a whole; third, such general tools and machinery as are considered necessary in every machine shop; fourth, material out of which to make the machines; fifth, money with which to pay the workmen their wages while the first lot of machines was being made and until commercial returns were had from their sale sufficient to carry on the business; sixth, the expense of rent and power; seventh, the expense of advertising the machines to the public, and eighth, the expense of selling the machines and collecting the proceeds of the sale. Is that true?

Deposition of Defendant's Witness, Alfred J. Doughty, stipulated in from Burroughs case.

A. If they were going to start a new business to make this entire machine, they would have to have all these things.

X-Q. 115. Whether the person or persons who were about to start the business or continue the business of making and selling the wide-frame adding machine like the Felt 1890 machine, such person or persons would have to have the following things: First, a shop and its furnishings; second, special tools and machinery made with a view to the manufacture of the wide frame adding machine as a whole; third, such general tools and machinery as are considered necessary in every machine shop; fourth, material out of which to make the machines; fifth, money with which to pay the workmen their wages while the first lot of machines was being made and until commercial returns were had from their sale sufficient to carry on the business; sixth, the expense of rent and power; seventh, the expense of advertising the machines to the public, and eighth, the expense of selling the machines and collecting the proceeds of the sale. Is that true?

A. Yes.

X-Q. 116. In addition to the foregoing the manufacture of such machine would require the expenditure of a considerable sum on account of the wear and tear of machinery and the consumption of such parts as drills, etc. Is that so?

A. That would depend upon the quantity of the adding machines being manufactured. If there were not very many being made the expense would not be very great.

X-Q. 117. About what do you allow or estimate as a proper allowance for the maintenance of those tools that are worn in use, such as drills, etc.

Deposition of Defendant's Witness, Alfred J. Doughty, stipulated in from Burroughs case.

A. You will have to make your question more specific.

X-Q. 118. You are unable to tell me about this, then?

A. I do not know what you want me to tell you.

X-Q. 119. How long would it take a workman after the parts were all completed by the use of special tools, to assemble these completed parts into a wide-frame adding machine of the kind like the Felt 1890 machine, and to adjust and finish the machine ready for use?

A. I don't know.

X-Q. 120. Can't you give any estimate at all, with your experience?

A. I can make a guess at it, of course, but I am not familiar with the machine except the outside part, as I have never taken one apart and have never seen one of them assembled.

X-Q. 121. You examined the machine. As I understand you, you are able to give an estimate of what the tools for making the machine would cost. In order to make this estimate you must know what these tools would consist of and how long it would take to make them and all the other elements of their cost. You have had large experience, according to your own statement, in making adding machines. Are you willing now to say that you can give no reasonable estimate of how long it would take a workman to assemble and finish one of these adding machines with the wide frame like Mr. Felt's 1890 machine?

Mr. Rector: Attention is called to the fact that the cost of the special tools concerning which the witness testified on direct examination related to special tools for the wide-paper carriage alone of the Felt 1890 model, and not to tools for the entire machine, and that the witness' examination of the Felt 1890 model related particularly to the wide-paper carriage of that exhibit.

A. The estimate I gave was for making tools for the

Deposition of Defendant's Witness, Alfred J. Doughty, stipulated in from Burroughs case.

manufacture of the carriage alone, on the 1890 Felt model. I have not examined the inside of the machine in detail, but did examine the carriage, which is practically all exposed.

X-Q. 122. Then your answer to question 36, which reads as follows:

> "Q. 36. Have you had your attention called to the two machines which are in evidence on this case on behalf of the complainant as Complainant's Exhibit Roll-Paper Comptograph and Complainant's Exhibit Felt 1890 Model?
>
> "A. Yes, I examined these machines this morning."

is not exactly accurate, is it?

> Mr. RECTOR: The attention of the court and the witness is called to question and answer 37 of the direct examination of the witness, which counsel refrains from quoting.

A. Yes, it is accurate.

X-Q. 123. Then you did examine the Exhibit Roll-Paper Comptograph, did you?

A. Yes, but not the inside of it.

X-Q. 124. What was the purpose of your examination of this roll-paper comptograph?

A. The purpose was to determine about how much work would be required to make the tools necessary to make the parts that were added to this machine convert it into a machine with a carriage the same as the one on the 1890 model.

X-Q. 125. Did you discover, when you made this examination, that some parts of the roll-paper comptograph had to be changed before the carriage could be applied to it?

A. It appeared to me that there would be some slight change necessary.

X-Q. 126. Can you enumerate those changes?

A. I could not do this in detail.

Deposition of Defendant's Witness, Alfred J. Doughty, stipulated in from Burroughs case.

X-Q. 127. The roll-paper comptograph is now before you; are you able to point out a single part that required to be changed?

Mr. Rector: Attention is called to the fact that the Felt 1890 model is not before the witness. If counsel desires the witness to point out changes in the roll-paper machine incident to the application of the wide-paper carriage to it, he should produce both machines at the place of examination and let the witness compare them in answering his questions.

A. On the wide-carriage machine I notice that it had a lever for feeding the carriage lengthwise; this was connected with the main part of the adding machine, and would probably necessitate some change in adapting this to the machine. The case would, no doubt, have to be changed to make room for the carriage proper. I could not go into all the details without making a further examination, and would of necessity have to take the machine apart in order to see how some of these connections and clearances were effected.

X-Q. 128. I have here a drawing of the 1890 machine, Complainant's Exhibit Drawing of 1890 Machine, or a copy of that exhibit; will you look at that and state whether that will assist you in any way in answering my question?

A. This drawing looks the same as the carriage which I examined, but I am unable to give you any further information from this than I have already given you.

X-Q. 129. I believe that is a correct drawing of the 1890 machine. Can you compare it with the roll-paper comptograph and state what changes are required to be made in the latter in applying the wide-frame paper carriage to it?

Mr. Rector: I desire to note upon the record that as the Exhibit Roll Paper Comptograph stands here, before the witness, there is no possible way of examining the internal mechanism of the machine,

Deposition of Defendant's Witness, Alfred J. Doughty, stipulated in from Burroughs case.

to enable the witness to state what changes might or might not be necessary for the purpose inquired about.

Mr. MUNDAY: The testimony of counsel is objected to as incompetent, since complainant has no opportunity to cross-examine; and, moreover, since further, it is not under oath; and there are other objections to such a course.

A. I can not tell in detail what changes would be required.

X-Q. 130. If you can not tell what changes would be required in the roll paper comptograph, how can you possibly estimate the cost of applying the wide-paper carriage to the roll paper comptograph, which application involves, or may involve, such changes?

A. This estimate which I made was a rough estimate and I made allowances for things I could not see. The correct way to make this estimate would be to take both machines entirely apart, separate all the parts that were used for making the wide carriage; this I have been unable to do, but I believe that the tools can be made to produce this work for the figure which I gave.

X-Q. 131. If any of the parts of the roll paper comptograph had to be changed in shape or form in order to permit the application of the wide paper carriage, you don't know what these changes are, do you?

A. No.

X-Q. 132. You don't know whether they would require special tools or not, do you?

A. Well, I rather think they would require special tools.

X-Q. 133. But you do not know just what special tools they would require, do you?

A. No.

X-Q. 134. You have stated the cost of special tools used in the manufacture of the Burroughs machine; now can you state how long it took a workman to assemble

Deposition of Defendant's Witness, Alfred J. Doughty, stipulated in from Burroughs case.

the parts of that machine and finish the machine after the parts were made?

Mr. Rector: The question is objected to for the reason that the witness has not stated anything concerning the cost of special tools for manufacturing the Burroughs adding machine, excepting the special tools for manufacturing the paper carriage of that machine.

Mr. Munday: The question is withdrawn.

X-Q. 135. You have stated that you were familiar with the manufacture of the Burroughs adding machine at the time when it was being made by the Boyer Manufacturing Company. Please state how long it took a workman to assemble the completed parts of that machine and finish and adjust the machine ready for use?

A. I believe it took about a day and a half to do this work.

X-Q. 136. In what condition were the parts when the workman took hold of them and did this work in a day and a half?

A. The small parts were all finished and some of the work was sub-assembled. The larger parts were entirely finished, in fact, practically all the parts were finished except some of the fine adjustments, such as aligning the type.

X-Q. 137. Are you able to state how long it would take a workman who is provided with nothing but the completed parts as they leave the dies and special machinery by which they are made, to sub-assemble these parts, to finish these parts where finishing is required, and then to put them all together to make a complete machine, and to adjust and finish the machine ready for use?

A. It is rather difficult to answer that question for the reason that a number of operations are performed on the machines and special tools after the parts are parti-

Deposition of Defendant's Witness, Alfred J. Doughty, stipulated in from Burroughs case.

ally assembled. For instance, a small piece may be riveted on to a larger piece in a riveting machine, and into the larger piece a hub will be fastened, this work being done in a drill-press with a spinning tool. This in turn will be put together with a shaft and put into a drilling jig, the hole drilled for the pin on a drill press, and finally the pin driven into place, assembling it with the shaft.

X-Q. 138. The day and a half time which you referred to is the time that is required to put the machine together after all of these sub-assemblings have been done, is it?

A. Yes.

X-Q. 139. Are you able to give a list of the special tools that would be required to make the wide-carriage portion of the 1890 Felt machine, which you estimate would cost $3000?

A. No; it would probably take a couple days time to do that; I mean to examine the machine and prepare this list.

X-Q. 140. How many acres does the factory of the Burroughs Company cover?

A. I don't know. Probably about four acres.

X-Q. 141. About how many men are employed there?

A. At the present time about 1200 in the factory proper.

X-Q. 142. How many men are employed in the business of selling, etc., and keeping accounts?

A. I believe there are about 200.

X-Q. 143. You say that at some time this factory built seventy machines a day; you don't mean to say that any one of these machines was begun and finished on the same day, do you?

A. No.

X-Q. 144. Now, how long does it take to build a machine at that factory, beginning with the time when the

Deposition of Defendant's Witness, Alfred J. Doughty, stipulated in from Burroughs case.

first part is made and ending with the time when the first machine built from that set of parts is completed?

A. I don't know just how long. We have some parts in stock now, I believe, that were made about two years ago; these, however, are the small parts; and the larger parts they work through in about two months' time.

X-Q. 145. Recurring to the old Burroughs wide-frame carriage machine, which you say you saw some time between the time of making of the first set of special tools and the time of making the second set of special tools, did you see any of the work that had been done on this machine?

A. I don't recall that I did.

X-Q. 146. What became of that machine?

A. I don't know.

X-Q. 147. Who is likely to know about it.

A. Mr. Rector would probably know if anybody does.

X-Q. 148. Anybody else?

A. I don't know of anybody else.

X-Q. 149. Would Mr. Pike be likely to know about it?

A. He may, I don't know whether he would or not.

X-Q. 150. Would either of the Mr. Langhornes know anything about it?

A. I don't know whether they would or not.

Re-Direct Examination by Mr. Rector.

R-D. Q. 151. Mr. Doughty, when did you last see or hear anything of that old Burroughs machine, prior to being interrogated about it here?

A. It is a good many years ago since I heard about this or saw it; I do not recall just how long ago it was, but believe that it was at least eleven years ago.

R-D. Q. 152. Referring to Q. 24 of your cross-examination, can you state what the cost of the templets there referred to was?

Deposition of Defendant's Witness, Alfred J. Doughty, stipulated in from Burroughs case.

A. I do not know what these cost. They were made up as the parts were designed, but they were very cheap, they were made of sheet zinc; they probably cost about 50 cents apiece, on an average.

R-D. Q. 153. And about how many of them were there?

A. There were probably two or three hundred of these templets.

R-D. Q. 154. Referring to Q. 41 of your cross-examination, can you state what the cost of the cutters there referred to was?

A. I think these were about $10 apiece.

R-D. Q. 155. And how many of them were there?

A. Two.

R-D. Q. 156. Referring to Q. 45 of your cross-examination, can you state what the cost of the key-top molds there referred to was, or what the cost of such molds would ordinarily be?

A. I do not know just exactly what these particular molds cost, but I believe about $50 each would cover them?

R-D. Q. 157. And how many of them were there?

A. I believe there would be about nine.

R-D. Q. 158. Referring to Q. 48 of your cross-examination, can you state what the cost of the type moulds there referred to was?

A. I do not know exactly what these cost, but I do not think it would exceed $75 each, and there were five of them used?

R-D. Q. 159. Why was it there were only five molds, when there were ten types, being the nine digits and a zero type?

A. These type were cast in pairs?

R-D. Q. 160. Do you know anything about the general practice of adding machine companies in this country during the past fifteen years, in respect to manufactur-

Deposition of Defendant's Witness, Alfred J. Doughty, stipulated in from Burroughs case.

ing their own type, or purchasing their type from type makers?

Mr. MUNDAY: Objected to as incompetent and immaterial.

A. I believe most of them have their type made by regular type manufacturers.

R-D. Q. 161. Did the Burroughs Adding Machine Company, or its predecessor, the American Arthmometer Company, ever do that?

A. The Burroughs Company did do that, in fact, we now have a large stock on hand that was made in Chicago; at the present time, however, we are making our own type.

R-D. Q. 162. Referring to Q. 50 of your cross-examination, can you state about what was the cost of the pattern of the hand-lever there referred to?

A. A wood pattern for this, which would have had to have been made, would cost about $3.

R-D. Q. 163. Referring to Q. 19 in your cross-examination, did you mean to say that the Boyer Machine Company did, or did not, furnish the special tools that were to be used in the two screw machines sent to England?

A. The Boyer Machine Company made these tools.

R-D. Q. 164. What did you or do you understand to be the "formers" inquired about by counsel in cross-question 19?

A. As I understand that question, it is meant forming tools for making the regular tools with that are to be used on the screw machine. This method is sometimes used when the tools are to be reproduced.

R-D. Q. 165. What is the nature of such tools?

A. They are made up of a piece of steel cut from a bar, either to be used in the milling machine or the lathe. In either case the form to be reproduced is filed or finished on one end of it in the form of a cutting tool.

Deposition of Defendant's Witness, Alfred J. Doughty, stipulated in from Burroughs case.

R-D. Q. 166. You have been interrogated about the date at which Mr. Pike built his first wide-paper carriage for the Burroughs adding machine; have you any means of definitely fixing that date?

A. No, I can not recall exactly when that was done. I am pretty sure that they were not being manufactured when the second lot of tools were made, in 1897, for the reason that we did not make any tools for this carriage at that time. Possibly experimenting was going on; of this, however, I am not sure.

R-D. Q. 167. But the reason you thought that Pike's first machine was made after the set of tools was made for Mr. Cannon or the English company was that no special tools for such paper carriage were included in that set of tools; is that correct?

A. Yes.

R-D. Q. 168. Mr. Felt has testified in this case that during the first five or six years that his company was engaged in the manufacture of its roll-paper comptograph machine it had only about five or six thousand dollars' worth of special tools used exclusively in the manufacture of that machine. Assuming the same proportion of hand work to be done on the wide-paper carriage of the Felt 1890 model as would be necessitated on the roll-paper comptograph in the manufacture of it with this number or amount of special tools, would $3,000 worth of special tools be, in your opinion, required for the manufacture of the wide-paper carriage?

Mr. MUNDAY: Objected to as immaterial and incompetent. Moreover, it does not appear that the roll-paper comptograph was ever made at a profit, with the tools in question.

A. Evidently Mr. Felt did not have a complete set for special tools for making this machine, and should the tools have been made for the carriage on the same line I have no doubt but what they would have cost consid-

Deposition of Defendant's Witness, Alfred J. Doughty, stipulated in from Burroughs case.

erably less than $3,000. In making this estimate I figured on a complete set of special tools.

R-D. Q. 169. Is there anything in the design or mechanical construction of the wide-paper carriage of the Felt 1890 model which particularly or peculiarly requires special tools for its practical manufacture?

A. I believe this carriage could be made up very nicely with ordinary machine-shop tools. It would probably be necessary to make a few special cutters and possibly two or three dies. Of course the expense would be greater to manufacture by this method than it would be should there be a complete set of special tools made.

R-D. Q. 170. In the course of your direct examination (answers 28-31) you referred to a list of special tools supplied to Mr. Cannon or the English company, which you stated was made out by you personally, and that you would endeavor to procure it from Detroit before the close of your examination. Have you that list here now?

A. I have that list here.

R-D. Q. 171. Is the book which you have produced the same book as that referred to in your answer to Q. 17 in your direct examination, or some other?

A. Yes, this is the book.

R-D. Q. 172. Are you able to say, upon now examining this book whether the list of tools which it contains was entered in it before, or after, the list which was identified here at the former session of your examination as Defendant's Exhibit List English Special Tools?

A. This list in the book was made after Defendant's Exhibit List English Special Tools.

R-D. Q. 173. Then the list which was identified here the other day was not copied from the list which you had made in the book referred to, as you then supposed?

A. No.

Deposition of Defendant's Witness, Alfred J. Doughty, stipulated in from Burroughs case.

R-D. Q. 174. Will you now please state just what this book is which you have produced here today, and what the entries in it represent, and when they were made?

A. I started to keep account of the tools necessary for this job in this book, listing all the necessary tools with a description showing for what purpose they were to be used. Some additions were made as we went along and finally when the job was entirely finished each particular item was checked off as the tool was finished. All these tools were actually tried out, parts being made with them before they were shipped.

Mr. RECTOR: I offer in evidence the book produced by the witness, and ask to have the same marked for identification "Defendant's Exhibit Doughty List English Tools."

I also offer in evidence copies of the Burroughs patents of August 21, of 1888, and September 12, 1893, which dates appear upon the Burroughs machine inquired about on the cross-examination of the witness (X-Qs. 4-7), and bearing numbers 388,116, 388,117, 388,118, 388,119, 504,963 and 505,078, and ask that they be marked collectively "Defendant's Exhibit Burroughs Patents."

R-D-Q. 175. I notice that the date of the two Burroughs patents of September 12, 1893, does not appear on the Burroughs machine which is in evidence here as Defendant's Exhibit Burroughs No. 1 Machine. Does the number (No. 1275) which appears on that machine, or anything else about the machine, indicate anything respecting the date of manufacture of that machine, as to whether or not it was before or after September 12, 1893?

A. No doubt the number of this machine was kept in the records of the Burroughs Company, which would show when the machine was manufactured. I do not know what year this machine was manufactured.

R-D-Q. 176. Do you know, independently of the rec-

Deposition of Defendant's Witness, Alfred J. Doughty, stipulated in from Burroughs case.

ord, whether this machine is a comparatively old or a comparatively new machine?

A. This machine is a comparatively old machine.

Mr. RECTOR: I now wish to recall the witness for the purpose of identifying a machine which should have been submitted to him on his direct examination, but which was not received until today.

R-D-Q. 177. You have stated on your direct examination, Mr. Doughty, that you are quite familiar with the wide-paper carriage adding machines manufactured by the American Arithmometer Company, and later by its successor, the Burroughs Adding Machine Company. Can you now produce a sample of those machines?

A. Yes, I have one here.

R-D-Q. 178. By what trade number or designation were these machines known?

A. They were known as the No. 3 machine.

R-D-Q. 179. And is this machine which you have produced here one of the regular No. 3 machines, such as manufactured by the American Arithmometer Company?

A. Yes.

R-D-Q. 180. I note that it bears No. 4423. Does that number, or anything else about the machine, indicate to you anything respecting the date of its manufacture, or whether it is one of the early wide-paper carriage machines made by the American Arithmometer Company, or one of the late ones?

A. The number indicates that it is one of the early machines, and also the style of carriage is of the old pattern.

R-D-Q. 181. By "old pattern" do you mean the pattern originally used by the American Arithmometer Company when it began to manufacture these No. 3 machines, or some later pattern?

Deposition of Defendant's Witness, Alfred J. Doughty, stipulated in from Burroughs case.

A. I do not know whether this is the pattern that was first used or not, but I do know that it is older than the machines that are now being made and have been made for the past two or three years.

Mr. RECTOR: I offer in evidence the machine now produced by the witness and ask to have the same marked for identification "Defendant's Exhibit Burroughs No. 3 Machine."

Mr. MUNDAY: Objected to as incompetent, immaterial and irrelevant.

Re-Cross Examination by Mr. Munday.

R-X-Q. 182. In what manner does the list in the factory book made by you differ from the list, a copy of which is in the letter book and which is entitled as having been submitted to W. J. Cannon?

A. In the book there are more details given. The tools are described as to their use, and I also believe there are more of them. This, however, is probably only in relation to the smaller tools which may have been overlooked in the original proposition.

R-X-Q. 183. Just give me an example at random. Take, for example, from the factory book symbol 134, and compare it with the same symbol in the other list.

A. No. 134 is hub for symbol 110; this is made on Flather lathe. That lathe is listed on the fourth page of this list, but does not give the name of the lathe. Roughing turret tool, G-117; that tool I think is an ordinary lathe tool and not in the other list. The next is a back-forming tool; that does not appear on the list of back-forming tools. I see by referring to the list again that I was mistaken; that this back-forming tool appears on page 691. The next is a centering tool and I believe is one of six on the same page, the last item on the page. Next, 3964, is a drill; this drill appears on page 690 un-

Deposition of Defendant's Witness, Alfred J. Doughty, stipulated in from Burroughs case.

der the heading "Twist drills." Beading tool; this appears on page 691, where it calls for ten screw machine beading tools. The next is a parting tool; appears on page 691; twenty-four of these tools furnished. Vise jaws for bead; I am unable to find the vise jaws in the press copy furnished. The next is a counter bore, and is on page 627, which calls for seventeen counter bores; no doubt one of these. The next is a burring tool and is listed on page 691, eight of these being listed for this purpose. The next is a reamer, and I think it is one of those listed on page 690; there is a difference of 1/1000 of an inch in the dimensions given. The last one is a snap gauge, and I do not find this in the copying book.

ALFRED J. DOUGHTY.

IN THE CIRCUIT COURT OF THE UNITED STATES, NORTHERN DISTRICT OF ILLINOIS, EASTERN DIVISION.

Comptograph Company,
Complainant,
vs.
Burroughs Adding Machine Company,
Defendant.
} In Equity. No. 28,782.

CHICAGO, July 17, 1908.

Introduction of evidence on behalf of the defendant in the above-entitled cause, pursuant to informal notice, and by consent, at Room 1625 Monadnock Building, Chicago, Illinois, before Louis B. Erwin, notary public, acting by consent as Special Examiner in said cause under the equity rule, beginning at 10 o'clock A. M., on Friday, July 17, 1908.

Present: John W. Munday, of counsel for complainant; Edward Rector, of counsel for defendant.

Deposition of Defendant's Witness, James S. Walker, stipulated in from Burroughs case.

JAMES S. WALKER, a witness produced on behalf of the defendant, being duly sworn, deposes and says as follows, in answer to interrogatories by Mr. Rector:

Q. 1. How old are you, Mr. Walker, and where do you live?

A. Forty years; St. Louis.

Q. 2. What is your occupation?

A. Assistant treasurer St. Louis Union Trust Company.

Q. 3. How long have you been connected with that institution?

A. Thirteen years.

Q. 4. That is to say, you became connected with it about the year 1895?

Deposition of Defendant's Witness, James S. Walker, stipulated in from Burroughs case.

A. Yes, sir; July, 1895.

Q. 5. What was the name of the institution at that time?

A. St. Louis Trust Company.

Q. 6. And when was its name changed to St. Louis Union Trust Company?

A. April, 1902.

Q. 7. What was your position with the St. Louis Trust Company during the year 1897?

A. I can't answer that positively; either bookkeeper or teller.

Q. 8. And what positions have you filled with the company since that time?

A. Tellerships, chief clerk, assistant treasurer.

Q. 9. Have you been acquainted with any Burroughs adding machines which have been in use in that company since you have been connected with it.

A. Yes.

Q. 10. It appears from evidence already taken in this case that in the summer of the year 1897 a Burroughs adding machine having a wide-paper carriage for the listing of items in separate parallel columns on a wide sheet of paper was placed in the St. Louis Trust Company. Do you recall having seen any such machine there at about that time?

Mr. MUNDAY: Objected to as leading and suggestive if the witness is expected to corroborate the date or give the nature of the machine.

A. Yes.

Q. 11. Do you recall what use the machine was put to —what sort of work was done on it—when it was first placed with the company?

A. Yes. Taking off trial balances of the individual and savings accounts ledgers, listing checks for the purpose of balancing pass books.

Q. 12. Will you please explain briefly the nature of the

Deposition of Defendant's Witness, James S. Walker, stipulated in from Burroughs case.

trial balances of the individual and savings ledgers, and how they were taken off on the machine in question?

A. The balances at the credit of each account were taken off in detail, added together and the totals compared with the balances as shown on the general balance book.

Q. 13. Did this work necessitate the listing of an item showing the credit balance of each account?

A. An individual item for every account.

Q. 14. Do you recall how many of such accounts there were at that time?

A. No.

Q. 15. Can you state approximately, or give us some idea as to whether it was a large number or a small number?

A. Perhaps a thousand accounts on the individual ledger and approximately 5,000 savings accounts.

Q. 16. How were the individual items showing the balances of these accounts listed on the machine in question —on the sheets of paper used in the machine?

Mr. MUNDAY: Objected to as leading. The witness has not testified that the accounts were listed on the machine.

A. In columns of 100 items, about six columns to the sheet.

Q. 17. What sort of sheets of paper were employed for the purpose?

A. Paper cut to fit the machine and to hold approximately 100 items in each column.

Q. 18. How long did that machine continue in use there for the work you have described, or similar work, and what finally became of it?

A. Well, we are still using machines of that nature for the same kind of work. That is, machines of the same capacity with the broad printing frame attached.

Q. 19. Have you still in use the particular machine

Deposition of Defendant's Witness, James S. Walker, stipulated in from Burroughs case.

which I inquired about, that is to say, the one which was placed with the company in the summer of 1897, and if not, please state what has become of the old machine?

Mr. MUNDAY: Objected to, since the witness has not testified that the machine was put into the bank in 1897 or what kind of a machine it was.

A. I can't answer either question.

Q. 20. Have you any knowledge concerning an exchange of adding machines made by the company with the Burroughs Adding Machine Company during the past year, that is to say, in the year 1907?

A. Yes.

Q. 21. Please state what that exchange was.

A. My recollection is that we purchased one electric machine and three hand machines, for which was taken in exchange by the Burroughs Company an old machine.

Q. 22. Have you with you any written data respecting that exchange, with which you were personally familiar at the time the exchange was made?

A. Yes.

Q. 23. Please state what it is.

A. Accounts Payable voucher of the St. Louis Union Trust Company to the Burroughs Adding Machine Company, dated March 1, 1907. I am reminded by this voucher that the purchase of machines referred to in a former question is one electric machine and two hand machines, instead of three hand machines.

Q. 24. Who made out this voucher—in whose handwriting is it?

A. I did.

Q. 25. And when was it made out?

A. March 1, 1907.

Q. 26. What are the additional papers which are attached to this voucher, if you know?

A. Bills for one electric and two hand-adding machines, being the machines referred to in the voucher.

Deposition of Defendant's Witness, James S. Walker, stipulated in from Burroughs case.

Q. 27. Did you have these bills at hand when you made out the voucher?

A. Yes.

Mr. RECTOR: I offer in evidence the voucher and bills produced by witness, and ask that they be marked for identification "Defendant's Exhibit St. Louis Trust Company Voucher and Bills," and for convenience of reference I ask that they be copied into the record at this point.

Said documents are in words and figures following, to-wit:

Form No. 4 Accounts Payable. 1-'06. 5M. S13½.

No. ———————

ST. LOUIS UNION TRUST CO.,

To BURROUGHS ADDING MACHINE Co., Dr.

Address Detroit

190	In full for 1 Electric Adding Machine	$450–
	1 " "	375–
	1 " "	375–
		1200
	Cr	
	By allowance on machine # 1540 retd	125
		1075

Paid
P. T.
M 1 1907
No. 2
St. Louis Union Trust Co.

Total,

I certify the above amount to be correct:

———————

Received Mar. 1, 1907 190–, of St. Louis Union Trust Co., One Thousand and seventy-five..... Dollars, in full for above amount.

BURROUGHS ADDING MACHINE Co.,

$1,075/00 J. P. WELFENSTEIN.

Deposition of Defendant's Witness, James S. Walker, stipulated in from Burroughs case.

BURROUGHS ADDING MACHINE COMPANY
Formerly AMERICAN ARITHOMETER COMPANY OF ST. LOUIS.
Factory and General Offices
DETROIT, MICHIGAN, U. S. A.

Joseph Boyer, President
H. Wood, Vice President
B. G. Chapman, Secretary and *Treasurer*
Alvan Macauley, Gen'l Manager.

Capital $5,000,000.

Sold to ST. LOUIS UNION TRUST COMPANY,
St. Louis, Mo.

Burroughs Adding and Listing Machine, Number #9-82852 Electric $450.00

O. K.
F. V. D.

TERMS: NET CASH. Please make all remittances payable in St. Louis, Chicago, New York or Detroit Exchange to the BURROUGHS ADDING MACHINE COMPANY, DETROIT, MICHIGAN.

BURROUGHS ADDING MACHINE COMPANY
Formerly AMERICAN ARITHOMETER COMPANY OF ST. LOUIS.
Factory and General Offices
DETROIT, MICHIGAN, U. S. A.

Joseph Boyer, President
H. Wood, Vice President
B. G. Chapman, Secretary and *Treasurer*
Alvan Macauley, Gen'l Manager.

Capital $5,000,000.

Sold to ST. LOUIS UNION TRUST COMPANY,
St. Louis, Mo.

One Burroughs Adding and Listing Machine, Number #9-81339 $375.00
Less amount allowed for Burroughs Machine #1540 125.00

$250.00

O. K.
F. V. D.

TERMS: NET CASH. Please make all remittances payable in St. Louis, Chicago, New York or Detroit Exchange to the BURROUGHS ADDING MACHINE COMPANY, DETROIT, MICHIGAN.

Deposition of Defendant's Witness, James S. Walker, stipulated in from Burroughs case.

BURROUGHS ADDING MACHINE COMPANY
Formerly AMERICAN ARITHOMETER COMPANY OF ST. LOUIS.
Factory and General Offices
DETROIT, MICHIGAN, U. S. A.

Joseph Boyer, President
H. Wood, Vice President
B. G. Chapman, Secretary and *Treasurer*
Alvan Macauley, Gen'l Manager.

Capital $5,000,000.

Sold to ST. LOUIS UNION TRUST COMPANY,
St. Louis, Mo.

One Burroughs Adding and Listing Machine,
Number #9-81063 $375.00

O. K.
F. V. D.

TERMS: NET CASH. Please make all remittances payable in St. Louis, Chicago, New York or Detroit Exchange to the BURROUGHS ADDING MACHINE COMPANY, DETROIT, MICHIGAN.

Q. 28. There is in evidence in this case and here present a Burroughs adding machine having a wide paper carriage and identified as "Defendant's Exhibit Burroughs No. 3 Machine." Will you please examine that machine and state how it appears to resemble or differ from the wide paper carriage Burroughs machine which was placed with the St. Louis Trust Company in 1897?

A. It appears similar in all respects.

Mr. MUNDAY: Objected to as leading and suggestive.

Mr. RECTOR: That is all.

Cross-Examination by Mr. Munday.

X-Q. 1. How many machines did the bank have at the time you made this last exchange and purchase referred to in the voucher?

A. I think three.

X-Q. 2. You mean three including the old one?

A. Yes, three machines in use at that time.

Deposition of Defendant's Witness, James S. Walker, stipulated in from Burroughs case.

X-Q. 3. At what time did the bank get these several machines?

A. To which machines do you refer?

X-Q. 4. I mean the three machines which the bank had in use at the time you made the exchange referred to in the voucher?

A. I don't remember.

X-Q. 5. How did these three machines differ, if at all, from each other and from the machines here on the floor, "Defendant's Exhibit Burroughs No. 3 Machine"?

A. Apparently not at all.

X-Q. 6. At what time in 1898, if you know, was the new paper carriage put on these machines, or any of them?

A. I have no knowledge of when the wide paper carriage was first put on the adding machine.

X-Q. 7. You do remember that some of the machines were changed, do you not?

A. Yes.

X-Q. 8. How were they changed?

A. In 1897 a machine having a printing carriage or paper frame for a narrow strip of paper was exchanged for a machine with a broad printing frame or paper carriage.

X-Q. 9. Did that machine with the broad frame also have a roller for a narrow strip of paper, so that both kinds could be used on it?

A. Yes.

X-Q. 10. Was there ever any repairs or alterations made of any of these machines? I mean the first three that the bank had with the wide carriage.

A. Repairs, yes.

X-Q. 11. The machines were quite often sent out to the shop, were they not?

A. I don't know what you mean by quite often; I would say they were repaired as frequently as other like

Deposition of Defendant's Witness, James S. Walker, stipulated in from Burroughs case.

machines in general use at that time. I would not undertake to say how often.

X-Q. 12. Do you know that the machine in every case was the same in construction and operation in all respects, when it came back from the shop as when it went to the shop?

A. No.

X-Q. 13. Do you remember at what time in the year 1898 the broad printing carriage on the first broad framed machine that you had was altered or changed?

A. No.

X-Q. 14. Were you yourself ever engaged in the work of taking off trial balances of the individual and savings accounts ledgers or listing checks for the purpose of balancing cash books while you were in the employ of the St. Louis Trust Company?

A. Yes.

X-Q. 15. Was that part of your work as a bookkeper or as a teller?

A. Both.

X-Q. 16. What was the first tellership that you had in the bank, in the St. Louis Trust Company?

A. Receiving.

X-Q. 17. Were you a bookkeeper in that bank before you were a receiving teller or afterward?

A. Before.

X-Q. 18. Do you remember when you yourself first used, if ever, a Burroughs machine with a broad printing frame on it?

A. No.

X-Q. 19. Before you were a bookkeeper in the St. Louis Trust Company, what was your occupation?

A. Traveling salesman.

X-Q. 20. For what?

A. Willis C. Walker & Company, St. Louis, general agents American Arithmometer Company.

Deposition of Defendant's Witness, James S. Walker, stipulated in from Burroughs case.

X-Q. 21. During what years were you so engaged?

A. Parts of 1894 and 1895, is my recollection.

X-Q. 22. What territory did you travel over?

A. No particular territory.

X-Q. 23. Where were your headquarters?

A. St. Louis.

X-Q. 24. You were then engaged in selling what were called Burroughs adding machines?

A. Yes.

X-Q. 25. In what places did you sell any during those years, 1894 and 1895?

A. I don't recall.

X-Q. 26. About how many did you sell?

A. Perhaps twenty-five.

X-Q. 27. In selling such machines you were accustomed to demonstrate their operation to the prospective purchasers?

A. Yes.

X-Q. 28. Did you sell any to the St. Louis Trust Company?

A. No.

X-Q. 29. Did you recommend the purchase of any to the St. Louis after you became connected with that company?

A. Yes, during my connection with it.

X-Q. 30. Have you ever been a stockholder in either the American Arithmometer Company or the Burroughs Adding Machine Company?

A. No.

X-Q. 31. After placing Burroughs adding machines on trial or in use with customers, while you were an agent of the American Arithmometer Company, did you have occasion from time to time to make adjustments or repairs on such machines?

A. In a limited way, yes.

Deposition of Defendant's Witness, James S. Walker, stipulated in from Burroughs case.

X-Q. 32. You were furnished with the usual selling agent's repair kit and instructions?

A. Yes.

X-Q. 33. Did you sell any Burroughs machines outside of the City of St. Louis?

A. Yes.

X-Q. 34. When such machines were shipped to you for delivery to customers were they always shipped completely assembled or did you sometimes have to put them together to some extent, that is, were they sometimes shipped to you partly taken to pieces, to facilitate packing or shipment?

A. Complete, ready for use on insertion of paper roll and handle.

X-Q. 35. Before you were a selling agent for the Burroughs adding machine, how were you engaged by them or any other parties?

A. In the banking business.

X-Q. 36. What bank?

A. National Bank of the Republic, St. Louis.

X-Q. 37. Were you ever employed in any other St. Louis bank prior to that time?

A. No.

X-Q. 38. Did the first broad-framed Burroughs machine that the St. Louis Trust Company acquired originally have, when the bank first received it, a broad-framed mechanism in which, as in the Defendant's Exhibit Burroughs No. 3 Machine, there were a pair of pressure rollers, one mounted above and one mounted below the roller platen, and both supported in swinging frames and held toward each other and against the platen by springs stretched between such swinging frames at either end of the roller platen, the two frames engaging each other so that when the frame of the upper roller was oscillated by its finger holds to lift such upper roller from contact with the roller platen, the other frame would also be os-

Deposition of Defendant's Witness, James S. Walker, stipulated in from Burroughs case.

cillated to depress the lower roller from contact with the roller platen?

A. I can't answer that question, not being of a sufficiently mechanical turn.

X-Q. 39. Did said broad-framed machine, when originally received by the St. Louis Trust Company, have on the rotating feed shaft of its paper carriage several rubber-faced feed rollers, or did it have metallic milled-faced feed rollers like the Defendant's Exhibit No. 3 Machine, or did it have some other kind of feed rollers or disks, or don't you remember?

A. I don't remember.

X-Q. 40. Did the said machine, when originally received by the St. Louis Trust Company, have in its broad paper carriage mechanism an upper pressure roller above the platen, of which, as in Defendant's Exhibit No. 3 Machine, the middle portion was reduced in diameter sufficiently so that the rubbers along said middle portion did not make contact with the roller platen, or don't you remember?

A. I don't remember.

X-Q. 41. Did the said machine, when originally received by the St. Louis Trust Company, have in its broad paper mechanism the bands around the platen for guiding the paper, anchored at both ends as are said bands in the Defendant's Exhibit No. 3 Burroughs Machine, or don't you remember?

A. I don't recall.

X-Q. 42. Did the said machine, when originally received by the St. Louis Trust Company, have a broad-framed mechanism in which, as in the Defendant's Exhibit No. 3 Burroughs Machine, there was a forked flat spring number secured to the under part of the broad frame, and bearing against the roller mounted on one end of the paper-feeding shaft, or don't you remember?

A. I don't know.

Deposition of Defendant's Witness, James S. Walker, stipulated in from Burroughs case.

X-Q. 43. In fact, you don't recall the then construction of that machine as to such matters?

A. Only in general as to a broad frame attached for the purpose of printing six columns to the sheet.

Re-direct Examination by Mr. Rector.

R-D. Q. 1. In your answer to X-Q. 26, Mr. Walker, did you refer to the number of machines which you personally sold, or to the number sold by the firm of Willis C. Walker & Company, by whom you were employed?

A. Personally.

Mr. Rector: That is all.

It is stipulated by counsel that the copy of Defendant's Exhibit St. Louis Trust Company Voucher and Bills, which has been made upon the record, may be used for all the purposes of the original exhibit, and that the latter may be retained by the witness for return to the files of his company.

James S. Walker.

IN THE CIRCUIT COURT OF THE UNITED STATES, NORTHERN DISTRICT OF ILLINOIS, EASTERN DIVISION.

Comptograph Company,
Complainant,
vs.
Burroughs Adding Machine Company,
Defendant.

In Equity.
No. 28,782.

CHICAGO, July 28, 1908.

Introduction of evidence on behalf of the defendant in the above-entitled cause, pursuant to informal notice, and by consent, at Room 1625 Monadnock Building, Chicago, Illinois, before Louis B. Erwin, notary public, acting by consent as Special Examiner in said cause, under the equity rule, beginning at 10 o'clock A. M. on Tuesday, July 28, 1908.

Present: Henry L. Clarke, of counsel for complainant; Edward Rector, of counsel for defendant.

Deposition of Defendant's Witness, Edward E. Leonard, stipulated in from Burroughs case.

EDWARD E. LEONARD, a witness produced on behalf of the defendant, being duly sworn, deposes and says as follows, in answer to interrogatories by Mr. Rector:

Q. 1. How old are you, Mr. Leonard, and where do you live?

A. Thirty-four years old; St. Louis, Missouri.

Q. 2. And what is your occupation?

A. Mechanical supervisor of Burroughs Adding Machine Company, St. Louis, Missouri.

Q. 3. That is to say, I suppose, at the St. Louis office or agency of the Burroughs Adding Machine Company of Detroit?

A. Yes.

Q. 4. How long have you been engaged in that work at St. Louis?

Deposition of Defendant's Witness, Edward E. Leonard, stipulated in from Burroughs case.

A. Since October, 1904.

Q. 5. What has been your duty or the nature of your work there during that period?

A. Well, to look after the machines in general, keep them in repair and working conditions.

Q. 6. What machines do you refer to?

A. The Burroughs adding machine.

Q. 7. Do you mean machines in the hands of customers of the Burroughs Adding Machine Company who have purchased and are using the machines?

A. Yes.

Q. 8. It appears from evidence already introduced in this case that a Burroughs adding machine, No. 1540, was in use for a time at the bank of the St. Louis Union Trust Company in St. Louis, and was exchanged or traded out in part payment for a new Burroughs machine about a year ago. Did you know anything about this Burroughs machine No. 1540?

Mr. CLARKE: Objected to as leading and suggestive, and for the further reason that it purports to give the witness to understand that certain things have been proved.

A. Yes, I know the machine.

Q. 9. Did you ever see it in use at the St. Louis Union Trust Company?

A. Yes.

Q. 10. Do you recall when you first saw it in use there?

A. Well, about November; some time in November I made a tour around the city, you know, inspecting machines; November, 1904.

Q. 11. That was soon after you began work as inspector or repair man at St. Louis, was it?

A. Yes, sir.

Q. 12. Do you recall how frequently you saw the ma-

Deposition of Defendant's Witness, Edward E. Leonard, stipulated in from Burroughs case.

chine at the St. Louis Union Trust Company after that time?

A. Well, I used to go around about every three months to look at the different machines and give them attention.

Q. 13. Did you do this generally with respect to all of the Burroughs machines in use at St. Louis, or only with respect to those at the St. Louis Union Trust Company?

A. All the machines in general.

Q. 14. Was the Burroughs machine No. 1540 in use, or idle, at the times you saw it at the St. Louis Trust Company?

A. The machine was always in use.

Q. 15. What use was being made of it, so far as you observed?

A. Well, listing checks, ordinary use in listing checks.

Q. 16. What sort of a paper carriage did this machine No. 1540 have on it when you saw it at the St. Louis Union Trust Company?

A. A wide-paper carriage.

Q. 17. And what sort of paper was being used in the machine when you saw it in use?

A. Well, sometimes they had the broad and sometimes the narrow.

Q. 18. What sort of paper do you mean by the "broad"?

A. Oh, about the full width of the carriage, say about 10 inches.

Q. 19. And was that paper in sheets or in a roll?

A. Sheets.

Q. 20. And what sort of paper was the "narrow"?

A. In rolls, about two and one-half inches wide.

Q. 21. Did you have anything to do with the trading out or exchanging of this machine, or with the handling of it at the time it was traded out?

Deposition of Defendant's Witness, Edward E. Leonard, stipulated in from Burroughs case.

A. Yes.

Q. 22. Please state what you had to do with it.

A. Well, I inspected the new machine that was to replace this one, the old 1540, and made an order out to have it sent down there to the bank and have the old one brought in in exchange. Then I re-packed this old machine, No. 1540, and forwarded it on to the Burroughs Adding Machine Company, Detroit, Michigan.

Q. 23. Can you produce the order which you say you made out for the delivery of the new machine and the taking back of the old machine, No. 1540?

A. Yes, I have it here.

Q. 24. Is this order in your handwriting?

A. Yes, sir.

Q. 25. And did you make it out at the date which it bears?

A. Yes, sir.

Q. 26. I notice near the bottom of the order the name "J. S. Walker." Do you know whose signature that is?

A. That is the cashier there, Mr. Walker.

Q. 27. At the St. Louis Trust Company, you mean?

A. Yes, sir.

Q. 28. And whose signature is the name "Mason" at the very bottom of the order?

A. That is the sales manager of the St. Louis office of the Burroughs Adding Machine Company.

Q. 29. Did he sign this order himself?

A. No, that is my signature; I signed it for him.

Q. 30. Did you make out any order for the shipment of this machine No. 1540 to Detroit?

A. Yes, sir.

Q. 31. Can you produce that order?

A. Yes, I have it here.

Q. 32. Is this order in your handwriting?

A. Yes, sir.

Deposition of Defendant's Witness, Edward E. Leonard, stipulated in from Burroughs case.

Q. 33. And did you make it out at the date which it bears?

A. Yes, sir.

Q. 34. Did you or the Burroughs office at St. Louis get any receipt back from the Detroit factory of the Burroughs Company for this machine No. 1540?

A. Yes.

Q. 35. Can you produce that receipt?

A. Yes, I have it here.

Mr. RECTOR: I offer in evidence the two orders and the receipt produced by the witness, and ask to have the same marked for identification "Defendant's Exhibit St. Louis Orders and Receipts." And for purposes of convenient reference I ask that they be copied into the record of this court.

Said exhibits are in words and figures following, to wit:

"Order No. ..... Date 2-27 1907

SHIPPING INSTRUCTIONS
BURROUGHS ADDING MACHINE CO.
W. H. Mason, Sales Manager,
318 Victoria Building,
St. Louis.

Deliver to St. Louis Union Trust
City

Bring in from .....

DELIVER	BRING IN
..No. (9) Machine 81339	..No. ( ) Machine 1540
..No. ( ) Electric	..No. ( ) Electric .....
..No. (3) High Stand Chicago stand	..No. ( ) High Stand....
..No. ( ) Low Stand.....	..No. ( ) Low Stand.....

Remarks .....
.....
See Mr. J. S. Walker
.....

Salesman MASON
Order No. 480.

Deposition of Defendant's Witness, Edward E. Leonard, stipulated in from Burroughs case.

CARRIER'S VOUCHER.

Mar. 5 1907.

Shipped from St. Louis Branch Office
BURROUGHS ADDING MACHINE COMPANY,
303 Chemical Bldg., St. Louis, Mo.

Verbal Order
Phone Order
Customers Order No. .....
Burroughs Adding Machine Co.'s Order No.
Shipped to BURROUGHS ADDING MACHINE Co.,
2nd & Amsterdam Avenue,
Detroit, Mich.

Charge to .....

Paid
Shipped via Wabash Ry. Collect
Shipped the following articles in good order:—

.....

Quantity Shipped

Burroughs Adding & Listing Machine No....
High Stand .....
9 Cases Adding Machines Paper
Rolls 15520 "
Package 7826
Ribbon 1540
Remarks: 15557
60236
65073
Packer E. E. L 794-m
Received Payment 35059
291-m Carrier

Date .....

BURROUGHS ADDING MACHINE COMPANY
Formerly American Arithmometer Company of St. Louis
Factory and General Offices,
DETROIT, MICHIGAN, U. S. A.
Capital $5,000,000.

Joseph Boyer, President
H. Wood, Vice-President
B. G. Chapman, Secretary and Treasurer
Alvan Macauley, Gen'l Manager.

Mechanical Inspection Department
In reply refer to CTF-RP

March 16, 1907.

Deposition of Defendant's Witness, Edward E. Leonard, stipulated in from Burroughs case.

Please return
to W. H. Mason
St. Louis Office:—

Your consignment account is being credited with the following machines, which have been received at the factory, via freight, charges collect:

3- 5520	4-60236
4- 7826	3-35059
1- 1540	4-65073
3-15557	

Yours very truly,
BURROUGHS ADDING MACHINE CO.
By B. G. CHAPMAN, JR."

Cross-Examination by Mr. Clarke.

X-Q. 1. What is your name?

A. Edward E. Leonard.

X-Q. 2. Just before commencing your deposition this morning were you shown by Mr. Rector a Burroughs adding machine, in an adjoining office?

A. He brought a machine in there, yes.

X-Q. 3. For what purpose?

A. To see if it looked like a No. 1 machine.

X-Q. 4. How did it differ from a No. 1 machine?

A. Had a broad carriage on it.

X-Q. 5. Did you have to look at that machine at all in order to tell Mr. Rector that the No. 1 Burroughs machines did not have broad carriages on them?

A. No.

X-Q. 6. The machine he brought in to you was a No. 3 Burroughs machine, was it not?

A. Style No. 3, yes.

X-Q. 7. What was the number of it?

A. I never took notice of the number.

X-Q. 8. If both you and Mr. Rector already knew that the No. 3 Burroughs machines had wide carriages on them, and that No. 1 Burroughs machines do not have

Deposition of Defendant's Witness, Edward E. Leonard, stipulated in from Burroughs case.

wide carriages on them, why do you think it was necessary to show you that No. 3 wide carriage machine at all just before you began to testify?

A. Merely to look at the broad frame.

X-Q. 9. Were you not already familiar with the broad frame Burroughs No. 3 machines?

A. Yes.

Deposition closed.

EDW. E. LEONARD.

Recess until 1:30 P. M.

Deposition of Defendant's Witness, Albert S. Herrmann, stipulated in from Burroughs case.

ALBERT S. HERRMANN, a witness produced on behalf of the defendant, being duly sworn, deposes and says, as follows, in answer to interrogatories by Mr. Rector:

Q. 1. How old are you, Mr. Herrmann, and where do you live?

A. Thirty-two years of age; residence, Detroit, Michigan.

Q. 2. What is your occupation?

A. Employed in the general office of the Burroughs Adding Machine Company.

Q. 3. We wish to ascertain, Mr. Herrmann, what the records of the Burroughs Adding Machine Company show, if anything, in reference to the disposition of a certain Burroughs adding machine, No. 1540, which is shown to have been shipped from the St. Louis office or agency of the company to the Detroit factory in March, 1907. Will you please state whether you have made any examination of the records of the company for this purpose?

A. I have made examination and find that it was received at the factory as shown by the receiving book.

Q. 4. Will you please produce whatever record you found of the receipt of the machine at the factory, and state what the record is.

Deposition of Defendant's Witness, Albert S. Herrmann, stipulated in from Burroughs case.

A. This is one of the regular receiving books, which shows that it was received at the factory on March 15, 1907; also duly signed by the receiving clerk.

Q. 5. By whom was this book kept, and in whose handwriting is the receiving ticket, which relates to the receipt of the machine No. 1540?

A. Mr. Shanks'.

Q. 6. And who is Mr. Shanks?

A. Mr. Shanks is the shipping clerk, but at the time this machine was received he was also receiving clerk for machines only.

Mr. RECTOR: I offer in evidence the receiving ticket relating to machine No. 1540 in the book produced by the witness, and ask that it be copied into the record at this point.

Said receiving ticket is in words and figures following, to wit:

"RECEIVING TICKET.
BURROUGHS ADDING MACHINE CO.
Freight
Received by freight Charges
Express
From B. A. M. Co.
Location, St. Louis, Mo.
Articles, Machine No. 1540 Trial
Sold
Complete
Date 3/15/07 Signed Shanks."

Q. 7. Have you found any record of the disposition which was made of machine No. 1540 after its receipt at the Burroughs factory on March 15, 1907?

A. I have. I find it was turned over to the mechanical inspection department, which department has charge of all repairs, in fact, all second-hand machines.

Q. 8. What record do you find to that effect?

A. I find the mechanical inspection order to the repair department for the machine to be rebuilt.

Q. 9. In what do you find that order?

Deposition of Defendant's Witness, Albert S. Herrmann, stipulated in from Burroughs case.

A. In the record kept by the mechanical inspection department.

Q. 10. Can you produce that record?

A. Yes, sir, I have it here.

Q. 11. What is this book you have produced, and what work and period of time does it purport to cover?

A. The book covers repairs made upon machines at the factory for the period of March, 1907.

Q. 12. And what does it contain with reference to machine No. 1540?

A. It shows that machine No. 1540 was rebuilt into a No. 1 machine between the period of March 15, 1907, and March 30, 1907.

Q. 13. Please point out and identify in this book the particular order which relates to machine No. 1540.

A. All pages in this book bear the number of the machine in the upper right-hand corner. In this case the page showing No. 1540 in the upper right-hand corner relates to this particular machine.

Q. 14. What is there in this order which you have identified which shows that machine No. 1540 was rebuilt into a No. 1 machine?

A. The symbol number 5-40 is what is generally known as narrow printing frame.

Q. 15. And what does the presence of this symbol number 5-40 in this order indicate?

A. Narrow printing frame.

Q. 16. Yes, but what does it indicate with respect to a narrow printing frame?

A. It indicates that a new narrow printing frame was put upon machine No. 1540.

Q. 17. And what do the other symbol numbers appearing upon this order indicate with respect to the various parts represented by them?

A. It means that in rebuilding the machine new parts

Deposition of Defendant's Witness, Albert S. Herrmann, stipulated in from Burroughs case.

bearing these symbol numbers were used in the reconstruction of the machine.

Mr. RECTOR: I offer in evidence the order relating to machine No. 1540 in the book produced by the witness, and ask to have the same marked for identification "Defendant's Exhibit Rebuilding Order Machine No. 1540." I also ask to have this order copied into the record at this point.

Said order is in words and figures following, to-wit:

#1

FACTORY REPAIR SLIP Order 58½ Machine No. 1540
Received from St. Louis Date T

G

Address
Address
Date Rec'd 3/15/07 by Frt Charges Date Ret'd by Charges
Substitute No. Sent by Charges
Return to Address
Instructions in letter of Charge to Stock

SALABLE CONDITION STAR

Rebuild. 2nd Hand A No. 1
Side Error Key. 1-202 ½ B.

This Machine had a *Star* put
in by mistake & I left it in. H. F. B.

MATERIAL No. Pieces	Symbol	Cost.	LABOR.		
1	5–30	004	Sembled by No. 1229	Hrs.	16½
45	6–3–¾	90	Inspected By No. 1228	"	21
1	120–¼	02	Final Insp. by No.	"	
1	2–220[a]	016	Total hrs.		42½
1	2–41	1.96	Material Cost		19.80
1	2–42	23	Labor Cost		11.11
1	250–¼	027	Burden		6.80
1	283–¼	006	Express		
1	2–56	3.333	Total Cost		37.71

Deposition of Defendant's Witness, Albert S. Herrmann, stipulated in from Burroughs case.

1	3–40	.328	Parts billed
SD	4–40	28	Time "
7	4–3–¼	595	Express "
1	4–30–¼	181	Ribbon "
1	15–52	33	Total Billed
10	658	02	SALE
10	659	02	
1	6–30–¼	08	
1	765	102	
1	709–½	006	
1	610	02	
8	6–1	472	
9	620	117	
9	655	054	2nd hd.
18	680	18	
7	685	084	
4	686	04	
1	8–50	58	
1	9–50	2.07	
1	911	017	
1	914	29	
1	957–¼	004	
1	959	003	
2	961	032	
1	962	003	
1	10–40	3.63	
1	5–40	1.75	
1	11–20	85	
1	10–66R	40	
1	10–66L	36	

Mar. 30 1907

Date Finished		Date Billed	Date Entered
9–715[a]	27		
9–780¼	063		
9–741	036		
9–753	009		
1–707	006		
1–713L	013		
1–719	006		

Q. 18. Have you found any record as to the disposition which was made of machine No. 1540 after it was rebuilt?

A. Yes, sir. The machine was shipped on July 20, 1907, to A. Bauman & Company, Lancaster, Ohio.

Deposition of Defendant's Witness, Albert S. Herrmann, stipulated in from Burroughs case.

Q. 19. What record have you found of such shipment?

A. The receipt from the National Express Company for the machine.

Q. 20. Have you that receipt here with you?

A. Yes.

Mr. RECTOR: I offer the receipt produced by the witness in evidence, and ask to have the same copied into the record at this point, and also marked for identification "Defendant's Exhibit Express Company Receipt Machine No. 1540."

Said receipt is in words and figures following, to-wit:

"RECEIPT

NATIONAL EXPRESS Co COMPANY

Received from BURROUGHS ADDING MACHINE Co.
In good order—subject to regular form of receipt—said to contain the following goods:

DETROIT, MICHIGAN, July 20, 1907.

Shipment to A. Bauman Co.,
Address Lancaster, Ohio.
Office Cleveland-Whipple Order No. 175-1/18/-65913
Shipped via National Exp. Co., Charges Paid

Quantity	Style and Serial Number
1	Burroughs Adding and Listing Machine 1-1540-S W. Moss."

Q. 21. Have you found any other record of the shipment of said machine to, or the placing of it with, A. Bauman Co., Lancaster, Ohio?

A. Yes, I have. Agent's location slip, which I have here, No. 1233, showing that the machine No. 1540 was placed with A. Bauman Company at Lancaster, Ohio.

Mr. RECTOR: I offer in evidence the agent's location slip produced by the witness, and ask to have it marked for identification "Defendant's Exhibit Location Slip Machine No. 1540."

Q. 22. Have you found any record as to what became of the machine after its shipment to A. Bauman & Co.?

Deposition of Defendant's Witness, Albert S. Herrmann, stipulated in from Burroughs case.

A. The machine was sold to A. Bauman Company on October 8, 1907, as per contract, which I have here.

Q. 23. Please state just what the paper is which you have produced in connection with your last answer.

A. It is the regular form of contract which is signed by all purchasers of Burroughs adding machines.

Q. 24. And is this the contract which was signed by A. Bauman Company at the time of their purchase of machine 1540?

A. Yes, sir.

Mr. Rector: I offer in evidence contract produced by the witness, and ask to have the same copied into the record at this point, and marked for identification "Defendant's Exhibit Bauman Contract Machine No. 1540."

Said document is in words and figures following, to-wit:

"C. J. W.

Cleveland City Lancaster, County Fairfield State Ohio

Date Oct. 8th, 1907

Rebuilt

Burroughs Adding Machine Company,

Detroit, Michigan

SHGUOR RUB We hereby agree to purchase the Burroughs Adding and Listing Machine, No. 1-1540-s Now on trial with us, price of same to be $200.00, net cash, delivered.

One model 'J' stand free

(Paid in Full Oct. 19th.)

You to guarantee said machine for one year from date thereof.

The A. Bauman Co.,

Per H. A. Bauman.

Accepted: 35-50000 Good

Burroughs Adding Machine Company

O. K.

Per.....

G. N. P."

Q. 25. What do the characters "1-1540-s" on the express receipt which you have produced indicate?

A. The first figure 1 indicates that it is a No. 1 ma-

Deposition of Defendant's Witness, Albert S. Herrmann, stipulated in from Burroughs case.

chine. The next group of figures, 1540, indicates the serial number of the machine, and the letter s indicates that it is a second-hand machine.

Q. 26. And I suppose the same characters which appear on the Bauman contract indicate the same thing?

A. Yes, sir.

Q. 27. Do you know what is done, in the Burroughs factory, with the discarded parts of old machines which are returned to the factory and rebuilt?

A. All parts taken from old machines and which are of no value are scrapped every thirty to sixty days, these parts being sold to purchasers of old iron, and so forth.

Q. 28. How extensively is the rebuilding of old machines carried on at the Burroughs factory?

A. There are approximately 100 men employed at the Burroughs factory who do nothing else but repair machines and rebuild machines.

Q. 29. Have you made, or caused to be made, any search to ascertain whether the old wide paper carriage of machine No. 1540 can be found?

A. I have, but on account of the number of machines being rebuilt, the particular repair man who rebuilt machine No. 1540 did not have any recollection of this carriage. I also made investigation and tried to ascertain from the foreman of the department as to whether he remembered a carriage of this kind, but he was unable to give me any information.

Q. 30. Did you make, or cause to be made, any search to ascertain whether the old paper carriage itself was still around the factory?

A. I caused such search to be made, but they were unable to locate this particular carriage.

Q. 31. When was it you caused this search to be made?

A. It was about a week ago.

Deposition of Defendant's Witness, Albert S. Herrmann, stipulated in from Burroughs case.

Direct examination closed.

Cross-examination waived.

ALBERT S. HERRMANN.

UNITED STATES CIRCUIT COURT, NORTHERN DISTRICT OF ILLINOIS, EASTERN DIVISION.

Comptograph Company, *Complainant,*
vs.
Burroughs Adding Machine Company, *Defendant.*
} In Equity. No. 28,782.

Copy of Stipulation from Burroughs case, as to Defendant's proofs therein.

STIPULATION.

For the purpose of avoiding the necessity for further proofs of a formal character, in respect to the matters hereinafter mentioned, it is hereby stipulated and agreed by and between counsel for the respective parties as follows:

1. That if Alexander W. Shanks were called and sworn and examined as a witness in this case he would testify that he is shipping clerk for the Burroughs Adding Machine Company at Detroit; that in March, 1907, he was also receiving clerk for returned machines; that he received machine No. 1540 from St. Louis on March 15, 1907, and on that date made out and signed the receiving ticket which has been introduced in evidence and copied into the record in connection with the deposition of Albert S. Herrmann.

2. That if Chester T. Fezzey were called and sworn and examined as a witness in this cause he would testify that the entries on Defendant's Exhibit Re-Building Order Machine No. 1540 are in his handwriting and were entered on said order by him between March 15, 1907,

Copy of Stipulation from Burroughs case, as to Defendant's proofs therein.

and March 30, 1907; and that the book containing said order is the regular order book of the Burroughs Adding Machine Company containing orders for the repairing and rebuilding of machines during the month of March. 1907.

3. That Defendant's Exhibit Express Receipt Machine No. 1540 is the original receipt given by the National Express Company to the Burroughs Adding Machine Company on July 20, 1907, for machine No. 1540 consigned to A. Bauman & Company, Lancaster, Ohio.

4. That Defendant's Exhibit Bauman Contract Machine No. 1540 is the original contract of purchase executed by A. Bauman & Company on October 8, 1907, for the purchase of Burroughs adding machine No. 1540.

5. That if George B. Craft were called and sworn and examined as a witness in this cause he would testify that during the first half of the year 1897 he was shipping clerk for the American Arithmometer Company, of St. Louis, Missouri; that the shipping order books introduced in evidence in this cause in connection with the deposition of Emil P. Wenger and identified as Defendant's Exhibit Shipping Order Books Nos. 1 and 2, were regular shipping order books used by said company during that period; that all of the orders in said books to which the name "Craft" is signed are in his handwriting, and were entered in said books at the dates which they respectively bear; and that the several machines to which said orders relate and refer were shipped at the time said orders were made out and as indicated therein.

6. That if Frank Halle were called and sworn and examined as a witness in this cause he would testify that from July 26, 1897, until a date subsequent to January 26, 1898, he was shipping clerk for the American Arithmometer Company, of St. Louis, Missouri; that the shipping order books introduced in evidence in this cause in connec-

Copy of Stipulation from Burroughs case, as to Defendant's proofs therein.

tion with the deposition of Emil P. Wenger, and identified as Defendant's Exhibit Order Books Nos. 2ª, 3 and 4, were regular shipping order books used by said company during said period; that all of the orders in said books in which the name "Halle" is signed are in his handwriting and were entered in said books at the dates which they respectively bear; and that the several machines to which said orders relate and refer were shipped at the time said orders were made out and as indicated therein.

7. That if John F. Calef were called and sworn and examined as a witness in this cause he would testify that during the year 1898 he was bookkeeper for the American Arithmometer Company, and that the entry "1/22/98 Citizens Bank, Washington, D. C.," appearing on page 639 of Defendant's Exhibit Machine Record Journal, and the entry "1551 – 1/27/98 Citizens Bank, Washington, D. C.," appearing on page 51 of Defendant's Exhibit Sales Record Book, and the entry "1951 – 3/1/98 National Bank of the Republic, Chicago, Illinois," appearing on page 126 of said last-named book are in his handwriting and were entered in said books by him at the dates which they respectively bear.

8. That if Edmund G. Langhorne were recalled and further examined as a witness in this cause he would testify that he was familiar with the entries on pages 750 to 766 of Defendant's Exhibit Machine Record Journal at the time said entries were made; that the machines there referred to under the Nos. 5001 to 5050 were machines specially numbered for the English market in a series beginning with the number 5001, and that all machines bearing numbers in said series were manufactured for and shipped to W. J. Cannon at Lincoln, England; and that the machines bearing corresponding numbers in Defendant's Exhibit Machine Record No. 3 Ma-

Copy of Stipulation from Burroughs case, as to Defendant's proofs therein.

chines were entirely different machines, manufactured more than two years later than the aforesaid English machines, and the said English machines were not broad-frame machines.

9. That if Emil P. Wenger were recalled and further examined as a witness in this cause he would testify that since his former examination he had obtained from the Chicago Pneumatic Tool Company certain old letter books of the Boyer Machine Company, which had passed into the possession of the Chicago Pneumatic Tool Company at the time the latter acquired the assets and business of the Boyer Machine Company in the year 1902; that among said letter books was the book submitted to the witness Alfred J. Doughty in connection with question 28 of his examination in this cause, that the original list of tools, of which a letter-press copy appears on pages 687 to 699 of said letter book was made out under the immediate direction of the said Wenger in December, 1896; that the pencil memoranda appearing on page 687 of said book at the head of said list of tools, and reading "This is referred to in our proposition of Dec. 29/96, page 512, in letter copy book next preceding this" was written in said letter book by the said Wenger on or about said December 29, 1896; that the original letter of which a letter-press copy appears on page 512 of the letter book referred to in said pencil memoranda and now here produced for the inspection of counsel, was dictated by the said Wenger at the date it bears and signed in his presence by Joseph Boyer, president of the Boyer Machine Company; that the original bill of which a letter-press copy appears on page 194 of a third letter-press copy book of said Boyer Machine Company, here produced for the inspection of counsel, was made out under the immediate direction of the said Wenger at the date which it bears, to-wit, March 5, 1898, and was the

Copy of Stipulation from Burroughs case, as to Defendant's proofs therein.

final bill rendered by the Boyer Machine Company for the equipment of general and special tools which it supplied for the manufacture of the Burroughs adding machine in England, pursuant to its proposition of December 29, 1896, contained in the last above-mentioned letter-press book; and that examiner's copies of pages 687 to 699, inclusive, of the first of the above-mentioned letter books, and of pages 512 and 513 of the second of said books, and of page 194 of the third of said books may be introduced and used in evidence in this cause in lieu of said original pages, and shall be considered as having been duly introduced in evidence on behalf of the defendant, and shall be marked for identification respectively "Defendant's Exhibit Boyer Machine Company List of English Tools," "Defendant's Exhibit Boyer Machine Company Letter" and "Defendant's Exhibit Boyer Machine Company Bill."

MUNDAY, EVARTS, ADCOCK & CLARK,
Solicitors for Complainant.

RECTOR, HIBBEN & DAVIS,
Solicitors for Defendant.

DEFENDANT'S EXHIBIT WYETH LETTERS.

Defendant's Exhibit "Wyeth Letters," stipulated in from Burroughs case.

Chicago Office
AMERICAN ARITHMOMETER CO.
of St. Louis,
Manufacturers of the
Burroughs Registering Accountant
J. H. Wyeth, Jr. or Adding Machine,
Sales Agent. 902 Fort Dearborn Bldg.

CHICAGO, Aug. 9, 1897.

E. G. LANGHORNE, ESQ., Sec'y,
American Arithmometer Company,
St. Louis, Mo.

Dear Sir:—

Your favors of the 6th inst. to hand Saturday morning, just as I was starting for Battle Creek to spend Sunday with my mother. Am delighted to say just here, that she is greatly improved and is now able to be wheeled about in her invalid chair, spending from one to four hours a day in the open air. I am also glad to be able to report that father is looking better than I have seen him for a long time.

I carefully note what you say regarding the Comptograph, and will await with much interest the action of the Directors today. Will consider the matter of sounding F. & T. on the question of selling their patents. Am of the opinion that this matter will have to be done very carefully; as soon as I can think of a way to get at them, will ask your opinion of same.

Regarding the matter of making my contract read for five years from July 7th, would say that I simply *suggested* this, thinking it would be nice to have the territory show up as being worked by W. & L. up to July 7th,

Defendant's Exhibit "Wyeth Letters," stipulated in from Burroughs case.

and after that by J. H. W. Jr., alone; however, this point does not matter much, and as I have your personal assurance that I am to have a contract identical with the one drawn up in the name of W. & L., presume there can be no objection to letting the date on that contract stand as the date of the new one. If the Directors object to this, I will simply keep the contract as it now is, as it is in full force, I having bought out J. T. L.'s interest therein. I must insist on working under a contract. This of course, in the event that anything should happen to you, as of course I know I will be taken care of as long as you are at the helm. Please advise.

Regarding the machine with the broad printing frame, would say that I have taken the liberty of deviating from your instructions somewhat, in that I have made arrangements to have this machine tested at Montgomery, Ward & Co.'s; I saw Mr. Thorne today and he assured me that this would be exactly what he wanted and he would take great pleasure in investigating it and being of any service possible. I thought this best as at this place we have one of what you might call our own operators, thoroughly familiar with the machine and quite apt in taking hold of new things; and again, the machine would not have to be tested but simply the device. We can take it to the treasury department later, if desired. Please ship the machine at once and I assure you it will receive my best attention.

Regarding the machines that have been out on trial for some time and to which you call my attention, would say that "machine #1053, Commercial National Bank, Peoria," has been taken out and slip showing the movement was in the St. Louis office at the time you wrote. The two machines at Aurora, Ill., are practically sold; I having been instructed by the Gas Company to render bill, and assured by the President of the bank that he "had no

Defendant's Exhibit "Wyeth Letters," stipulated in from Burroughs case.

doubt they would keep the machine and the committee appointed to investigate, would report at their next meeting." Your Mr. J. T. L. and myself have had some correspondence regarding the two machines in Omaha, it being understood that he was to look after them when he went to Omaha. I am in receipt of the enclosed letters from them, which shows I have been looking after them, and I would like to have you attend to them from this one, as you may see fit. I have simply written them to continue to use the machines until our representative calls. It was understood when Mr. J. T. L. left here, he was to take the matter of the Dunlap, Russell & Co.'s machine up direct with them. Machine #1547 was rented to the Farmers Loan & Trust Company, of Sioux City, Iowa, on May 10th; the rental contract and one month's rent being promptly sent you and now in your possession. Your Mr. J. T. L. is also familiar with the reason for the two machines being on trial with the Albert Dickinson Company; but I will repeat that they have a very difficult piece of work to do, that they say they would be only too glad to buy machines to do; they demonstrated they could not do it satisfactorily with one machine and wished to try two, and as they are using several Comptometers, I have left them severely alone, hoping that our machines and the *lists* would appeal to them. I hardly think it will be necessary for me to make further explanation, as you will see from what I have stated, that I have reported all these matters promptly.

As to charges made against the A. A. Co. for work done on machines, will only say that I do not believe they were ever charged for turning over a ribbon or putting on a new one. It was my information that the A. A. Co. desired a complaint slip made out every time *any* work was done on one of their machines, in order that they might keep up their records, and it has been my custom

Defendant's Exhibit "Wyeth Letters," stipulated in from Burroughs case.

to follow these instructions both for their convenience and my own. When I make up my charges against them, I look over these complaint slips, using my best judgment as to what to charge and what not to charge, and beg to state that in the fifteen months I have been in this territory, the A. A. Co. have paid W. & L. $78.95, an average of $5.26 per month; and there has never been less than eight machines in Chicago, and for some time there has been twenty-four. If the Company have any fault to find with this, it would be hard to see what they could want.

As to the business being done in this territory, appointing sub-agents, etc., would say that your Mr. J. T. L., if you will ask him, will doubtless tell you that he personally, has visited every town in the State of Iowa, that he thought could use the machine, judging from their condition as shown by the Bankers Register. This also is true with the States of Minnesota and Wisconsin, and while there are two or three towns in Illinois that should be visited; with their exception, I consider this territory fairly well worked with the one machine now at my disposal. If you can tell me where a sub-agent could work to advantage in my territory, with the exception of Canada, I would be very glad to know where it is. As far as Canada is concerned, I feel that same work should be done there, and I have been contemplating making a trip up there this Fall, but would say that if you will find me a man that you yourself, would be satisfied to have go into this territory, that will take hold of it on a commission basis, the same as H. B. W. has made with his sub agents, I will send him to Canada without a day's delay. On the whole, I cannot refrain from saying that I believe the complaints made in your letter of Aug. 6th, were made without proper investigation, and I am of the opinion that you will say so after mature thought.

I note that "the newspapers are full of returning pros-

perity," and am glad to know that the newspapers are prosperous, but outside of the newspapers, must say I have seen no return of prosperity in this territory. While everything seems to be feeling better, you will note by the enclosed clipping that the clearings in the Cities in my territory have increased very little.

Defendant's Exhibit "Wyeth Letters," stipulated in from Burroughs case.

Very truly yours,

(signed) JNO. H. WYETH, JR.

[Same Letter-Head as No. 1.]

CHICAGO, Aug. 13, 1897.

AMERICAN ARITHMOMETER COMPANY,

St. Louis, Mo.

Gentlemen:—

Your favors of the 11th and 12th to hand and carefully noted. Machine with the broad printing frame has arrived and will be put out on trial today, and you will be kept posted from day to day.

Note you have written Mr. Hale about supplies. Would say that I do not care to send him supplies if I am to be held responsible for collections. He has recently failed in business and while it might be all right, I remember several cases of trouble we had by this method. I guess when banks want ribbons they will order them direct from the Company. Hardly see how this can be handled anyhow, because if I wait and send them to the banks, I get $1.50, whereas if I sell to him I would have to bill at a discount, and yet if you ship direct to him, I would expect the usual profit the same as though I had sold them.

Am taking up the Metropolitan Bank of Minneapolis matter, and also the Dunlap, Russell & Co. at Jacksonville, Ill.

I am sending herein my contract and several complaint

Defendant's Exhibit "Wyeth Letters," stipulated in from Burroughs case.

to follow these instructions both for their convenience and my own. When I make up my charges against them, I look over these complaint slips, using my best judgment as to what to charge and what not to charge, and beg to state that in the fifteen months I have been in this territory, the A. A. Co. have paid W. & L. $78.95, an average of $5.26 per month; and there has never been less than eight machines in Chicago, and for some time there has been twenty-four. If the Company have any fault to find with this, it would be hard to see what they could want.

As to the business being done in this territory, appointing sub-agents, etc., would say that your Mr. J. T. L., if you will ask him, will doubtless tell you that he personally, has visited every town in the State of Iowa, that he thought could use the machine, judging from their condition as shown by the Bankers Register. This also is true with the States of Minnesota and Wisconsin, and while there are two or three towns in Illinois that should be visited; with their exception, I consider this territory fairly well worked with the one machine now at my disposal. If you can tell me where a sub-agent could work to advantage in my territory, with the exception of Canada, I would be very glad to know where it is. As far as Canada is concerned, I feel that same work should be done there, and I have been contemplating making a trip up there this Fall, but would say that if you will find me a man that you yourself, would be satisfied to have go into this territory, that will take hold of it on a commission basis, the same as H. B. W. has made with his sub agents, I will send him to Canada without a day's delay. On the whole, I cannot refrain from saying that I believe the complaints made in your letter of Aug. 6th, were made without proper investigation, and I am of the opinion that you will say so after mature thought.

I note that "the newspapers are full of returning pros-

perity," and am glad to know that the newspapers are prosperous, but outside of the newspapers, must say I have seen no return of prosperity in this territory. While everything seems to be feeling better, you will note by the enclosed clipping that the clearings in the Cities in my territory have increased very little.

Defendant's Exhibit "Wyeth Letters," stipulated in from Burroughs case.

Very truly yours,

(signed) JNO. H. WYETH, JR.

[Same Letter-Head as No. 1.]

CHICAGO, Aug. 13, 1897.

AMERICAN ARITHMOMETER COMPANY,

St. Louis, Mo.

Gentlemen:—

Your favors of the 11th and 12th to hand and carefully noted. Machine with the broad printing frame has arrived and will be put out on trial today, and you will be kept posted from day to day.

Note you have written Mr. Hale about supplies. Would say that I do not care to send him supplies if I am to be held responsible for collections. He has recently failed in business and while it might be all right, I remember several cases of trouble we had by this method. I guess when banks want ribbons they will order them direct from the Company. Hardly see how this can be handled anyhow, because if I wait and send them to the banks, I get $1.50, whereas if I sell to him I would have to bill at a discount, and yet if you ship direct to him, I would expect the usual profit the same as though I had sold them.

Am taking up the Metropolitan Bank of Minneapolis matter, and also the Dunlap, Russell & Co. at Jacksonville, Ill.

I am sending herein my contract and several complaint

Defendant's Exhibit "Wyeth Letters," stipulated in from Burroughs case.

slips, also the last repair bill properly receipted. Per your instructions, I ordered four dozen of the narrow ribbons from Underwood & Co. He delivered five ribbons to me, which were all he had in stock at this time. These five together with the one recently given us, will make one half dozen, so that our order stands now for three and one half dozens, which will be made at once. Am sending you four of these five and would suggest that you have a supply of loose spools sent here with ribbons already on them for the last duplicating devices shipped. I would caution you not to put too much ribbon on the spools.

Please ship at once by freight, five cases #1 narrow, *blank* paper to Messrs. Mandel Brothers, 117 State Street, Chicago, sending bill for same to me.

Yours very truly,

Enclosures. (signed) J. H. Wyeth, Jr.

[Same Letter-Head as No. 1.]

Chicago, Aug. 18, 1897.

American Arithmometer Company,

St. Louis, Mo.

Gentlemen:—

I enclose herewith bill for advertisement in Club Herald, also bill for one half dozen narrow ribbons, both of which are O. K.'d.

Please send to this office one or two bottles of clock oil. Please advise whether or not the "Complaint Record Books" recently sent you were ever received and whether they have been returned to me. They were mailed the same day as my letter of advice and if you have not received same, I desire to take the matter up with the Post Office Department.

The broad frame machine goes to Montgomery Ward &

Defendant's Exhibit "Wyeth Letters," stipulated in from Burroughs case

Co. today. I go to Milwaukee to place a machine tomorrow, and Friday I will put a machine in the Merchants National Bank of Chicago on trial. Have secured two more trials from Chicago banks after September 1st.

Very truly yours,

Enclosures. (signed) J. H. WYETH, JR.

[Same Letter-Head as No. 1.]

CHICAGO, ILLS., September 4, 1897.

AMERICAN ARITHMOMETER COMPANY,

St. Louis, Mo.

Gentlemen:—

I have your favor of the 1st inst. and note your liberality in passing ticket for 50 cents drayage on machine "936 from First National Bank and 1040 over," for which accept thanks. Inasmuch as you only charged $15.00 for the work done on this machine, I thought possibly you would be willing to stand this drayage charge so included it in my statement. Please credit the entire amount of same, $19.50, to my Paper and Ribbon Account.

While in Milwaukee Wednesday, I was kept at the Northwestern National Insurance Company's office from 9 in the morning until 5 in the evening, and did not have time to attend to appointing a repair man, etc. I did, however, get in forty minutes, from 12 o'clock until 12:40 at the First National Bank, during which time I exchanged the case on the machine recently shipped them, but did not see Mr. Camp, or have time to return the case to you. Beg to say in this connection that if you feel the matter sufficiently important, I will take a day next week to run over there, appoint a man and give him thorough instructions on the machine, if you will pay the expenses of the trip, which will probably amount to about $5.00. Please advise.

Defendant's Exhibit "Wyeth Letters," stipulated in from Burroughs case.

The machine with the broad frame has been running for some weeks at Montgomery Ward & Co.'s and they speak very highly of it, and Mr. Thorne prefers it to the standard carriage machine, inasmuch as he can file his records in much better shape. The device has given very good satisfaction, but requires some attention from the operator, and I believe there are some points about it which might be improved. If another set of small rollers could be put near the bottom of the platen, so as to grip the paper and hold it tighter, it would be an advantage. This would permit of the amounts being printed nearer the top of the paper, and also nearer the bottom, so that so much paper would not be wasted in margins at each end of the sheet. It would also enable the paper to be turned backwardly more readily as the machine, as now constructed, sometimes fails in this point, that is, the platen will turn backwards without the paper occasionally. I do not think any more good can be done by allowing this machine to remain longer where it is, so please advise your wishes in the matter.

I received a call from Siegel, Cooper & Co. yesterday, and found that machine #722 was making errors in addition of $1. or $2. or $3. over: upon examination, I found that the point of #413 where it engages with #411 had worn enough to allow #411 to drop every time the keys were struck a little too hard. I am returning the worn #413 to you by mail today that you may inspect same.

Will you please ship two (2) single standard machines to this office? Would also ask your attention to my contract, which was sent you on August 13th for some changes.

Very truly yours,

J. H. Wyeth, Jr.

Defendant's Exhibit "Wyeth Letters," stipulated in from Burroughs case.

[Same Letter-Head as No. 1.]

CHICAGO, September 8, 1897.

AMERICAN ARITHMOMETER COMPANY,
St. Louis, Mo.

Gentlemen:—

Your favors of the 7th to hand and noted. Machines 1693 and 1694 have been received in apparently good condition. My bill of $19.50 has been properly entered and I return same herein. I was at fault in not advising that my wish was to credit the Mandel Bros. check for $45 to my Paper and Ribbon Account, so that your action was O. K.

Regarding the machine report, would say that on August 3rd, I rendered you a very full statement of where every machine in my territory was located and think this report and the one returned herein, dated September 4th, will give the present location of all machines. I had not been advised that you desired such a complete statement each month, hence the report of the 4th inst. was made in accordance with the regular printed form. I will in the future make such statement as you desire each month. You will note that on this report, I stated that six machines had been received from August 3rd to September 4th, but in enumerating them failed to put down #1677; I did not know that you had charged machine #1575 to me, and I had never considered it as a regular trial.

I have enjoyed Mr. E. G. L.'s visit the last two days very much. We have talked over the business from A to Z and I believe his visit has been productive of much good.

Very truly yours,
(signed) J. H. WYETH, JR.

Defendant's Exhibit "Wyeth Letters," stipulated in from Burroughs case.

[Same Letter-Head as No. 1.]

CHICAGO, Oct. 5, -97.

AM. ARITH. Co.,
St. Louis, Mo.

Gentlemen:—

Answering yours of the 4th regarding my machine report of 2nd would say that 1053 was reported sent to factory Aug. 27th slip #2253. It is, however, in Milwaukee at present and will doubtless be there in couple of days now—has been ordered in. #1575 is the Broad Frame machine. I enclose slip for it, which is the first time it has been regularly entered on my books. On the report under "In Chicago Office" 1677 should read 1777 —an error in listing.

Yours truly,
(signed) J. H. WYETH, JR.

[Same Letter-Head as No. 1.]

CHICAGO, Oct. 9th, 1897.

E. G. LANGHORNE, ESQ., Secretary,
American Arithmometer Co.,
St. Louis, Mo.

Dear Sir:

I have yours of the 8th inst., and carefully note same but beg to advise you that I cannot put a machine in the Fort Dearborn National Bank as we are entirely out of duplicating machines at present, and it would be useless to put in the standard machine. Will bear the matter in mind, however, and at your request will put in a machine as early as possible.

I notice you have changed bill for the narrow ribbon to meet my wishes in the matter, and beg to thank you for so doing.

I had not opened the box containing this last shipment

Defendant's Exhibit "Wyeth Letters," stipulated in from Burroughs case

until today, and as you have requested no further correspondence on the subject, I will only say that the ribbons wound on the spools seem to be Underwood's Special and all O. K. but the others are the free samples furnished by Miller & Pierce. I will stand the charge for these latter ribbons myself, as I will not charge a bank for anything so unsatisfactory as these ribbons have proven. For instance my record shows that one of them was put on machine No. 1411 on September 23rd and changed on October 8th; another was put on machine No. 1372 on September 20th and taken off October 7th, therefore lasting only two weeks and two days. This ribbon I have preserved and am mailing it to you today. You will note that the edges are frayed, and the ribbon is twisted or folded on the edges in several places near the middle. On the other hand, the Underwood ribbons was put on No. 1412 at the American Exchange National Bank, where the machine is used almost constantly, on August 16th and not changed until September 22nd, thus lasting twice as long as the M. & P. ribbon.

A short end of this same Underwood ribbon was put on machine No. 1352 on August 31st, and not changed until September 30th. I give this data for your own information and satisfaction. I have endeavored to keep close watch of this matter.

Frank returned last night, having placed two machines as per enclosed slips, landing two out of a possible three trials.

I enclose herewith expense account and repair bill up to October 1st. This is several days late, being so on account of pressing business.

While I was in Minneapolis last, Frank wrote me that the machine with the broad frame No. 1575 at Montgomery Ward's was making errors in addition. They submitted one list showing a shortage of 33 cents. It is of

Defendant's Exhibit "Wyeth Letters," stipulated in from Burroughs case.

course hard to account for such an error, but it was there. They also claim the machine had made a shortage of ten cents a number of times, and they had set it aside being afraid to use it. Upon investigation I find that the machine does occasionally show a shortage of ten cents. I enclose herewith slips showing two instances. Have not endeavored to locate the actual cause of this on account of lack of time. Kindly advise your wishes in the matter.

Very truly yours,

Enc. (signed) J. H. WYETH, JR.

[Same Letter-Head as No. 1.]

CHICAGO, Oct. 12th, 1897.

E. G. LANGHORNE, ESQ., Secretary,
American Arithmometer Co.,
St. Louis, Mo.

Dear Sir:

I am returning herein receipt for $75.00 part of commission on 1644, properly signed. You may say to Mr. Spiekerman that I will make the same agreement with him if he can make sale to the other bank at East St. Louis.

Answering yours of the 11th, regarding machine No. 1575, I beg to advise that the machine is now in this office, and the slip I sent you on the 9th I made myself, and there can be no question as to the proper operation of the machine. You might be sure that I would be absolutely certain that an error was no fault of the operator before I reported it. Therefore, at your request, I am sending this machine to you by express today. Mess. Montgomery Ward & Company prefer this machine particularly, and wish it returned as soon as possible, so I would request your prompt attention.

Very truly yours,

J. H. WYETH, JR.

Defendant's Exhibit "Wyeth Letters," stipulated in from Burroughs case.

[Same Letter-Head as No. 1.]

CHICAGO, Oct. 23, 1897.

AMERICAN ARITHMOMETER COMPANY,
St. Louis, Mo.

Gentlemen:—

Yours of the 22nd to hand and noted. Machine No. 1575 came to hand this morning and has been sent to Montgomery Ward & Company's. Yesterday we shipped you machine No. 1062, which was taken from the Werner School Book Company. I found it impossible to sell this machine, and as it seems to be one of that lot on which the keys go down so hard, I thought best to send it to you for overhauling.

Please send to this office, via freight, charges prepaid, three cases of the duplicating paper and two cases No. 1 broad R & P.

Very truly yours,

J. H. WYETH, JR.

[Same Letter-Head as No. 1.]

CHICAGO, Oct. 27, 1897.

AMERICAN ARITHMOMETER COMPANY,
St. Louis, Mo.

Gentlemen:—

Your favors of the 25th and 26th to hand and noted. I was in Aurora all day yesterday and can only report that the comptograph arrived at the Gas Company's office on Monday of this week. Things therefore practically being in the same shape as when I wrote last. Am watching this matter carefully and same will have my best attention.

I enclose herein letter this day received from First National Bank of Hutchinson, Kansas, with carbon copy of my reply thereto, and would ask that you give this

Defendant's Exhibit "Wyeth Letters," stipulated in from Burroughs case.

matter prompt attention, it being out of my territory, I feel that you would want to attend to it.

I also enclose carbon copy of a letter this day written Mess. Andrae & Co., and also copy of letter I am sending to each of the banks which I trust will meet with your approval.

Referring to your bills of the 21st inst., beg to advise, that I received only two cases of broad R. & P. paper, instead of three as billed. You will note that there were three cases of narrow blank paper shipped to Siegel Cooper & Co., at the same time and it is my impression that four boxes were tagged to them and two to me, instead of three to each. Will you kindly look the matter up?

I note what you say about selling machine No. 1575 to Montgomery Ward & Co., and would say that they have had two machines there for some time, but they have never, to my knowledge, used but one machine at a time, and I do not think there is any probability of selling them the second machine; although I believe they would be willing to pay something for the broad frame, but when Mr. E. G. L. was here, we decided to let the matter rest until the perfected broad frame was ready. However, if it is your desire, I will either insist upon their paying something for the broad frame, or take the machine out. Kindly state what amount you would be willing for them to pay.

Will send you No. 1357 from the First National Bank to you tomorrow. Would ask you to note the two enclosed letters from the Second Ward Savings Bank of Milwaukee, and it is my impression that the poor work is due to the fact that grooves have been worn in the rubber impression roll. I would ask, therefore, that you send a new roll to our new repair man, Mr. E. D. Rigby,

of 391 Broadway, Milwaukee, with full instructions for putting same in.

Defendant's Exhibit "Wyeth Letters," stipulated in from Burroughs case.

Very truly yours,

enclosures. J. H. WYETH, JR.

Called at Siegel Cooper & Co.'s today and find they only received three boxes of paper in the first shipment.

[Same Letter-Head as No. 1.]

CHICAGO, NOV. 13, 1897.

AMERICAN ARITHMOMETER COMPANY,

St. Louis, Mo.

Gentlemen:—

I returned to the City this morning and find quite an accumulation of letters from you dating from the 2nd inst., to the 12th inst. I do not know that I will be able to answer them all fully today, but if I do not, a note from you will bring forth a full reply from me on any subject you may desire information on.

Expense account for October is properly receipted and returned herewith. I note prompt attention to Machine No. 1694 in Donaldson's in Minneapolis, which is very gratifying. Mr. Peterson strikes me as being a very competent man, and I believe machines in Minneapolis are in as good condition as any I know of.

The Northwestern National people are anxious for their new case with the old check table, and I trust you will be able to give it to them before a great while. The Second Ward Savings Bank matter was handled very nicely and everybody is happy. I note with much satisfaction copy of letter from Mr. S. E. Miller of Aurora. Am going to Aurora either next Monday or Tuesday, and sincerely hope I may be able to close this matter up. Thank you for your kind offer of scrap paper. Your statement of November 2nd, will be checked up and reported on in a day or two. In this connection would

Defendant's Exhibit "Wyeth Letters," stipulated in from Burroughs case.

say, that I have my eye on my paper account. Would say that after deducting the amount of stock on hand, and the amount charged on my books for paper, my net indebtedness to you was only about $90.00 to the first of this month.

Can report very successful results indeed from my trip. I have succeeded in closing positively eight sales, and believe that after the first of the year two others in Minneapolis will buy. Taking the matter up in detail would say that I sold:

Nicollet National Bank,
Minneapolis, Minn.
One-half cash, balance January 4th.

National Bank of Commerce,
Minneapolis, Minn.
One-half cash, balance January 1st.

I promised to put their old machine in good shape same as we did for the Security Bank.

Minneapolis Dry Goods Company,
Minneapolis, Minn.
Straight Sale.

William Donaldson & Co.,
Minneapolis, Minn.

Decided they would not buy a machine this year. After considerable persuading, I got them to give $250 for a small machine, and use the one they have now until the narrow machine is given them. I enclose copy of memorandum of this sale.

St. Paul National Bank,

Straight sale for cash. Give three year guarantee and promised broad frame when ready, same as we did with H. E. Bucklen & Company, in Chicago. Comptograph competition very strong.

Farwell, Ozmun, Kirk & Co.,

Also found Comptograph very much in evidence here,

Defendant's Exhibit "Wyeth Letters," stipulated in from Burroughs case.

but succeeded in selling our machine. Payment to be made January 15th. Have their written agreement to that effect. On my last trip I told the head bookkeeper to do the right thing by me, by pushing my machine along, and I would do the right thing by him if together we could knock out the Comptograph and sell our machine. After the sale was made, I gave him $30.00, and presume according to E. G. L's agreement to stand half the allowance made to Bucklen & Co., and the Aurora Gas Light Company, he will also be willing to stand half of this. As I have been obliged to advance to the A. A. Co., some money on two of the sales above, I would like for them to carry this until January 15th, if they can particularly as I will need considerable money for my Canadian trip. However if they will not do so, I will remit for machine and carry the account myself.

Security Bank,
Minneapolis, Minn.

See other letter of even date.

In conclusion would say, that as before stated, I closed eight sales, and achieved two victories over the Comptograph and two victories over the new machine coming out in Minneapolis. I am very well satisfied with the results.

Very truly yours,

J. H. WYETH, JR.

[Same Letter-Head as No. 1.]

CHICAGO, NOV. 15, 1897.

JOHN T. LANGHORNE, ESQ.,
American Arithmometer Co.,
St. Louis, Mo.

Dear Sir:

The National Bank of the Republic is pushing me for a machine with the broad frame, they claim they cannot

Defendant's Exhibit "Wyeth Letters," stipulated in from Burroughs case.

use the machine as it is now because they cannot file their records correctly. They have hired the Miss Foley that used to be at the Boston Store as an operator, but cannot keep her busy on the work they have to do at present, and say that they will not start on the other work until they can have the broad frame, for the reason as stated above that they cannot file their records in proper shape.

I had a talk today with Mr. Thorne of Montgomery Ward & Company's, and he does not want to give up the broad frame; and as he says he will soon need a second machine, I do not like to insist on taking the broad frame away from him.

Will you kindly inform me about when I can have a machine with a broad frame for the National Bank of the Republic. If you have an old model there send it up and Miss Foley will watch it. Write me a letter on the subject that I can show to the bank.

I closed with the Continental National Bank today for one machine sure, and they are to let me know December 1st., whether or not they will take two. Am going to close tomorrow morning with the Chicago National Bank for one sure, and possibly two.

A duplicating Comptograph is on trial at Marshall Field & Company's along side of our machine. The American Exchange National Bank are trying another single machine on their in-clearings, and are also going to try a Comptograph, but as they tried it once do not think they will buy it, but at that time the comptograph people did not have the duplicating arrangement; which factor will not enter into this case.

I enclose herein the letter regarding the Minneapolis machine and the Security Bank matter referred to in mine of Saturday which could not be gotten off then.

Defendant's Exhibit "Wyeth Letters," stipulated in from Burroughs case.

I am working on the new catalogue and will send you my "copy" in a day or two.

Thank you very much for the very kind expressions regarding this territory in yours of the 13th.

Am enclosing herein a letter as per the latter part of yours.

Very truly yours,

J. H. WYETH, JR.

enclosures.

[Same Letter-Head as No. 1.]

CHICAGO, Nov. 30, 1897.

AMERICAN ARITHMOMETER CO.,

St. Louis, Mo.

Gentlemen:

Your favors of the 27th and 29 insts., to hand and noted, I am writing the two Gas Companies named by Mr. Goudy in my territory, today, and hope for good results. Thank you for the opportunity offered, and you may be sure I will do the right thing by Mr. Goudy in case any sales are made.

Regarding the Farmers' Loan & Trust Company of Sioux City, would say, that I have recently had a letter from the Security National Bank, of Sioux City in which Mr. Manley, the President, mentioned the fact that there was a "cheaper machine which was to sell at about one-third of the cost of ours." It may be that they are investigating this machine, whatever it may be.

You will remember that I made a mistake when I made the rental contract with them in not closing the deal at the time. They snapped me up in the mental proposition but would have closed and paid for the machine at that time, so I think if you will *go right after them* you can get the check. They recently ordered a case of paper and paid for it.

I succeeded in selling Montgomery Ward & Co., the

Defendant's Exhibit "Wyeth Letters," stipulated in from Burroughs case.

machine with the Broad Frame. I promised to give them a new one when we get to making them. This brings my sales for this month up to sixteen machines. I enclose herein my expense account for November, amounting to $35.26, also my machine report, both of which I trust will check up satisfactorily.

I note what you say about copy for the new catalogue and will make a special effort to get through with it this week.

Very truly yours,

J. H. WYETH, JR.

[Same Letter-Head as No. 1.]

CHICAGO, Dec. 7, 1897.

JOHN T. LANGHORNE, ESQ.,
c/o American Arithmometer Co.,
St. Louis, Mo.

My dear John:

I worked all day Sunday and most of the day yesterday on the new catalogue, but have not as yet gotten the thing together to my entire satisfaction. It is, however, rapidly nearing completion, and I think will be just what we want when finished. My idea, briefly outlined, is to have a rather full description of the machine, setting forth the good points of its mechanical constructing in strong language and answering the questions and furnishing the information usually asked about the machine. I think it would also be a good scheme, if not too expensive and there is time, to have say twenty or thirty of our best letters photographed and a fac simile copy of each printed on a page by itself. Say we select six or eight from New York, a couple from Boston and Philadelphia, three or four from Pittsburgh, three or four from Chicago, and some from the south, and one or two from very small places, for instance, Rushville, Indiana.

Defendant's Exhibit "Wyeth Letters," stipulated in from Burroughs case.

I would not care to take the responsibility of deciding whether or not a complete list of the users should be printed in the same book, but if it could be set up in small type, and not occupy too much room, I think it would be a good plan. Or, this list could be printed in a separate book and testimonials distributed through the book, if desired. I do not think the cover makes so much difference, it should be neat and attractive, and I think the book should be of a smaller size than the last one.

I believe we should have a full and complete description of the machine, and say all we want to say in the reading matter. My idea being, that if a man is interested at all he will read the book through, and if he is not interested, he will not read it any how, however brief. You must admit that a man who has never seen our machine would gather a very indistinct and not at all adequate idea of the machine by reading the description in our last catalogue.

I have prepared a full description and elaborated upon the broad frame, and will also mention the smaller machine. If you do not wish these latter points mentioned, please advise me immediately. Would be glad to hear from you as to whether the above ideas meet your approval. I hope to be able to give you the copy completed in a couple of days.

Yours very truly,

J. H. Wyeth, Jr.

[Same Letter-Head as No. 1.]

Chicago, Dec. 8-1897.

American Arithmometer Co.,

St. Louis, Mo.

Gentlemen:

Your letter of the 6th inst., to hand and carefully noted. The Marshall Field matter seems to be coming our way.

Defendant's Exhibit "Wyeth Letters," stipulated in from Burroughs case.

you may be sure that I will take advantage of any opportunity that may present itself in this case. I am writing my father today and will explain to him more fully the situation as to the bond and contract matter.

I succeeded in placing the No. 1 wire in machine No. 736 without any trouble whatever. Again referring to the Marshall Field matter would say, that the small machine will not answer their purpose as they use it in footing up their regular bank deposit. I forgot to mention in my last that the machine you fix up for them must also have the numbered dials on the pinions, as in one feature of their work, this point will be very valuable.

Enclosed please find my check for $250.00 payment machine No. 1575 with broad frame sold to Montgomery Ward & Co., this City, guarantee dated Nov. 30th, 1897. I sent you memorandum of agreement regarding this sale a day or two since.

The People's Gas Company, of this City, have recently given a straight order for a Comptograph and paid for same, thinking at the time they were buying our machine. They are in need of a second machine and want to investigate ours. They will use same for the same purposes Montgomery Ward & Marshall Field do and will want the duplicating machine. I wish you would wire me immediately upon receipt of this tomorrow, if you cannot possibly ship me a duplicating machine in the next few days. Kindly do your best in this matter, as it is quite important, and I am sure will result in a quick sale.

Yours very truly,
(signed) J. H. Wyeth, Jr.

Defendant's Exhibit "Wyeth Letters," stipulated in from Burroughs case.

[Same Letter-Head as No. 1.]

CHICAGO, Dec. 23-1897.

AMERICAN ARITHMOMETER CO.,
St. Louis, Mo.

Gentlemen:

Your favor of the 22nd inst., to hand and carefully noted. Bill for work done on machine No. 528 has been received and passed to your credit.

I have seen the First National Bank and read them that portion of your letter referring to the paper matter. Mr. Gillett was very much interested today in the Broad Frame Machine, and I am satisfied we can induce them to use it on their New York letter.

Business in our line seems to be about over for the year of 1897. I have called to see two or three people recently and they have told me to see them after the first of the year.

Nothing more of interest so will close.

Wishing every one with the A. A. Co., a Merry Christmas and a prosperous New Year, I am,

Yours very truly,
J. H. WYETH, JR.

[Same Letter-Head as No. 1.]

CHICAGO, Jany. 15, 1898.

E. G. LANGHORNE, ESQ.,
St. Louis, Mo.

My dear Mr. Langhorne:—

The Comptograph people seem to have taken a fresh start in the last week or two and have sent new literature to all the banks in the City besides placing machines on competitive trial against me at the National Bank of the Republic, and Metropolitan National. When John was here he spoke of the possibility of my getting the old

Defendant's Exhibit "Wyeth Letters." stipulated in from Burroughs case.

model machine with the broad frame, and I write to ask if this cannot be arranged in some way. The National Bank of the Republic are going to re-arrange their system entirely basing same upon the machine, but cannot do so now for the reason, that they cannot file the loose slips. They have been waiting a long time for the broad frame, and I am sure if we can give it to them we can make a quick sale. I am particularly anxious for this now since the Comptograph has put in an appearance. The chief clerk told me yesterday that he thought he would have to get two machines, making duplicates, to put up his clearing, as his work was getting very heavy and he could use machines to advantage in that department. They will do nothing until they see the broad frame, and I am of the opinion that if we can give them a broad frame right away, it will mean a sale of three machines in the very near future. He will be satisfied to put up with an imperfect machine for a while, if we agree to exchange it when the broad frame is regularly manufactured. I hope you will give this matter careful consideration and trust you may be able to let me have the machine with the broad frame.

Yours very truly,

(signed) J. H. WYETH, JR.

[Same Letter-Head as No. 1.]

CHICAGO, Jany. 24-1898.

AMERICAN ARITHMOMETER Co.,

St. Louis, Mo.

Gentlemen:

Yours of the 22nd., to hand and we are accordingly shipping you machines No. 1742 and 1746 by National Express today. Inasmuch as it will doubtless be found necessary to change the type of these machines and pos-

Defendant's Exhibit "Wyeth Letters," stipulated in from Burroughs case.

sibly make other changes, I have thought best to send the whole machine instead of the devices as suggested by you.

Referring to order for the two narrow machines recently placed by the People's Gas Light Company, would say, that bill has been rendered and accepted by these people and remittance will be made on their regular pay day. I mention this so that you may not be worried over it. I am keeping right after The Fair but they keep putting me off from day to day. Mr. Kessner has been so busy that he has been unable so far to even look at the narrow machine although same is running regularly in the Auditing Department.

I heard indirectly on Saturday that Mr. Jansen of the National Bank of the Republic had remarked "if those people don't give me that Broad Frame pretty soon, I will just go ahead and buy the Comptograph and be done with it," so anything you can do to hurry forward the Broad Frame machine will be appreciated.

Yours very truly,

(signed) J. H. WYETH, JR.

F.

[Same Letter-Head as No. 1.]

CHICAGO, Feby. 5-1898.

E. G. LANGHORNE, ESQ., Secretary.
AMERICAN ARITHMOMETER CO.,
St. Louis, Mo.

Dear Sir:

We have your favor of the 4th inst., relative of the expense account of this office for $26.82, which you say has been passed to the credit of our paper and ribbon account. You also say "we return herewith the bill which kindly receipt and return." We beg to advise that you failed to send the bill with the letter. If you will kindly mail same to this office it will be receipted and returned to you.

Defendant's Exhibit "Wyeth Letters," stipulated in from Burroughs case.

Some days ago in a letter to this office relative to the broad frame machine for the National Bank of the Republic, you mentioned the fact that if the machine was not shipped by the 5th of February to call your attention to the matter on that date, which I am accordingly doing. Mr. Jansen of the "Republic" is still very anxious for this machine and if possible, it would be greatly appreciated, if same could be sent at once. I have the pleasure of reporting that the Comptograph has been taken out of this bank, as I was over there this morning and saw nothing of it.

Yours very truly,

(signed) J. H. WYETH, JR.

F.

[Same Letter-Head as No. 1.]

CHICAGO, 2/18/98.

AMER. ARITH. CO.,

St. Louis, Mo.

Gentlemen:—

Yours 17th to hand. Also 5 narrow machines for The Fair. Think they will be ready for them in a day or so. Will do as suggested about Canadian business. My idea now is to go to Ottawa and have a personal interview with the Commissioner.

Please send me a couple dozen of the white boxes for shipping broad ribbons in.

I enclose herewith my checks for $250, $500.00 and $458.35 payment as follows:

Duplicating Machine No. 1946.
Sold to Corn Exchange National Bank, Chicago, Ills.
Guarantee dated March 3rd, 1898 $250.00

Standard Machine No. 1901.
Sold to The Albert Dickinson Co. (Seed Merchants,) Chicago, Ill.
Guarantee dated January 26th, 1898 $250.00

Defendant's Exhibit "Wyeth Letters," stipulated in from Burroughs case.

Broad Frame Machine No. 1951.
Sold to The National Bank of the Republic, Chicago, Ills.
Guarantee dated March 1st., 1898 $250.00

Narrow machines Nos. 6039, 6040, 6041, 6042 and 6044.
Sold The Fair, Chicago, Ills.,
Guarantee dated Feby 21, 1898.

Less $375.00, allowed for Standard machine No. 1354.
returned. $833.35
375.00.—$458.35

Yours very truly,
(signed) J. H. WYETH, JR.

[Same Letter-Head as No. 1.]

CHICAGO, March 15, 1898.

AMERICAN ARITHMOMETER CO.,
St. Louis, Mo.

Gentlemen:

We find that on one of the machines shipped you yesterday from the First National Bank, we neglected to take off the single printing frame which was in use at the time the machines were packed. We are therefore sending you today by express the device belonging to this machine and would ask you to send the single printing frame back when you return the machine. Will you please trace your shipment of the 9th inst., of six cases of No. 1 narrow paper to this office as same has not yet arrived, and we are entirely out of narrow paper. Your prompt attention to this will oblige.

Please enter the order of the National Bank of the Republic of this City for one broad frame machine to be delivered as soon as possible. This machine is to be used in connection with the one already delivered to this bank, and with the aid of the two machines, Mr. Jansen, the Chief Clerk, is going to get up a complete system based

Defendant's Exhibit "Wyeth Letters," stipulated in from Burroughs case.

entirely upon the broad frame machine. With this information before you we trust you will get the machine to him at the very earliest possible moment.

Yours very truly,

J. H. WYETH, JR.

[Same Letter-Head as No. 1.]

CHICAGO, March 23, 1898.

AMERICAN ARITHMOMETER COMPANY,
St. Louis, Mo.

Gentlemen:

Answering yours of the 22nd., inst., would say that the American National Bank of Chicago, is a consolidation of the American Exchange National Bank, and the National Bank of America; recently effected. The Security Bank of Duluth, I believe, failed some three years ago, and I have no idea where machine No. 680 is.

I enclose herewith letters received from Mr. Rigby of Milwaukee, and also from the Second Ward Savings Bank of Milwaukee relative to repairs needed on the latter's machine. I am sending machine to you tonight by National Express for your attention, preferring that you handle the matter yourself. The machine is in exactly the same condition as when received here.

Mr. Jansen of the National Bank of the Republic is doing most excellent work in the way of advertising our broad frame machine, and he asked me today if it would not be possible for us to rush one machine through for him specially ahead of the others. If this can be done, his system can be adopted throughout the bank and everything will work smoothly, and if it is a possible thing to get this machine out ahead of the others, I believe it would pay to go to a little extra expense in the matter. I wish you would write me fully as to what can be done

in this direction. He has been over to the office three times to urge me to get him another machine.

Defendant's Exhibit "Wyeth Letters," stipulated in from Burroughs case.

Yours very truly,

J. H. WYETH, JR.

[Same Letter-Head as No. 1.]

CHICAGO, Mar. 24, 1898.

E. G. LANGHORNE, ESQ., Secretary.
American Arithmometer Company,
St. Louis, Mo.

Dear Sir:

I have had a number of quite important trials on hand here in Chicago recently, in every one of which the Comptograph has been in evidence, so that I have not thought it would be good policy to leave the City, preferring to be right here in the spot, and give these trials my personal attention. They seem to be going nicely now, however, and I believe I can get away, therefore write to ask you if you can furnish me with one-half dozen narrow machines and three or four Standard machines for Canada. Would also ask you to give me what information you can regarding the broad frame. When do you expect to have these machines ready for the market? Can you rush one of them ahead of the others for the National Bank of the Republic? Any information you can give me on this subject, and also with reference to Canada will be much appreciated.

Yours very truly,

J. H. WYETH, JR.

Defendant's Exhibit "Wyeth Letters," stipulated in from Burroughs case.

[Same Letter-Head as No. 1.]

CHICAGO, June 14, 1898.

AMERICAN ARITHMOMETER CO.,
St. Louis, Mo.

Gentlemen:

I today received an order from the First National Bank for a Broad Frame machine, am furnishing them a Standard machine until we can deliver the Broad Frame.

Mr. Jansen, of the National Bank of The Republic, is getting very much discouraged over the long delay in delivering his Broad Frame machine, and I am very much afraid will throw up the whole business. Will you please advise me the latest news regarding, when I may expect these machines.

Very truly yours,
(signed) J. H. WYETH, JR.

[Same Letter-Head as No. 1.]

CHICAGO, July 7, 1898.

AMERICAN ARITHMOMETER COMPANY,
St. Louis, Mo.

Gentlemen:—

The Broad Frame machine No. 4001 came duly to hand today, but I regret exceedingly to report that it was damaged in shipment. A portion of one of the castings of the Broad Frame attachment was broken off in such a way as to badly cripple the machine. It is a portion of the castings that controls the sliding mechanism. You will readily see what it is when you attempt to slide the carriage.

I am returning the machine to you today by express, and would ask that you correct the trouble at your very earliest convenience. I telephoned Mr. Jansen, and, at my request, he came to the office and *saw the machine,*

Defendant's Exhibit "Wyeth Letters," stipulated in from Burroughs case.

but he remarked that it was d—— tough luck, in which I heartily agree with him.

I have just returned from a trip and will answer your several favors received during my absence tomorrow.

Yours very truly,

(signed) J. H. WYETH, JR.

[Same Letter-Head as No. 1.]

CHICAGO, July 9, 98.

AMERICAN ARITHMOMETER CO.,
St. Louis, Mo.

Gentlemen:

Your favor of the 8th to hand, also machine 4004. It is now at the National Bank of the Republic, and I can assure you everybody is glad to see it. It seems to work nicely.

As my plans for the immediate future will be influenced largely by how soon I can get more Broad Frame machines, I would ask that you advise me immediately, as to when I may expect more of them. I can use ten very nicely, but will take what you can give me.

Please send one dozen narrow ribbons to this office.

Yours very truly,

(signed) J. H. WYETH, JR.

[Same Letter-Head as No. 1.]

CHICAGO, July 14, 1898.

J. C. CALEF, ESQ.,
c/o American Arithmometer Co.,
St. Louis, Mo.

Dear Sir:

As I am very desirous of obtaining some information regarding the Broad Frame machines, will you kindly let me know how many there are in the lot now coming out; how many have been assembled; whether or not

Defendant's Exhibit "Wyeth Letters," stipulated in from Burroughs case.

they are going together easily, and without trouble; what the intention is regarding the disposition of them, that is, how many will each agent receive, and by what time we can expect them?

You must appreciate the fact that I am working decidedly in the dark, without the above information. I do not know how to talk to people, and find it very inconvenient. If I cannot get machines for six months or six years, well and good, but on the other hand, if I am to get them shortly, it is quite important that I know of it, and arrange matters accordingly. I have a number of orders for the machine, and a number of places where I have competition with the Comptograph, and where I have promised the Broad Frame, and asked them to reserve their decision until we show it to them. This sort of thing cannot continue indefinitely, as people will soon begin to realize that I don't know what I am talking about.

I write you personally in the hope that you can spare a few moments from your, I fear rather arduous duties, to enlighten me somewhat, and enable me to determine "where I am at." If you can answer the above questions I will esteem it a personal favor, and reciprocate at any time you may call upon me.

Yours very truly,

J. H. WYETH, JR.

[Same Letter-Head as No. 1.]

CHICAGO, July 19-98.

AMERICAN ARITHMOMETER COMPANY,
St. Louis, Mo.

Gentlemen:

I have had nothing to report for the past few days. The work of changing machines in the office is going on, and will be completed shortly. The three Broad Frame

machines arrived in good condition and are being placed as per the enclosed slips.

Defendant's Exhibit "Wyeth Letters," stipulated in from Burroughs case.

I would like to know how many of the hundred machines I am to receive, and about how fast they are being turned out? A number of things are dependent upon this information, and I am very anxious to receive it.

Yours very truly,

(signed) J. H. WYETH, JR.

[Same Letter-Head as No. 1.]

CHICAGO, Aug. 30-1898.

AMERICAN ARITHMOMETER COMPANY,

St. Louis, Mo.

Gentlemen:—

Will you please enter the name of Arthur Ahern, 325 St. James Street, Montreal, Canada, as the repair man for the City of Montreal. I left with him the necessary tools, etc., so I wish you would send me a regular set, to replace the one I gave Mr. Ahern.

I returned to the City this morning, and am quite busy. Have nothing to report, however, except a very pleasant time, and a great desire for work. The five Broad Frame machines recently shipped received in apparently good condition during my absence. Am taking up the matters which have been awaiting my attention, and will advise you as I get them straightened out.

Very truly yours,

(signed) J. H. WYETH, JR.

Am I to expect more Broad Frame machines, or have I received my full allowance of the first hundred?

Defendant's Exhibit "Manny Letters," stipulated in from Burroughs case.

DEFENDANT'S EXHIBIT MANNY LETTERS.

New York Office of
AMERICAN ARITHMOMETER CO.,
Of St. Louis,
Manufacturers of
BURROUGHS' REGISTERING ACCOUNTANT.

WALTER B. MANNY, *Sales Agent,*
202 Broadway.

Feby. 27, 1897.

MR. E. G. LANGHORNE, Secy.,
St. Louis, Mo.

Dear Sir:

I must have list of dry-goods houses by return mail, or we will not be in next issue of the Department Store Journal, which by the way is a monthly, Copies will be sent as directed.

Sample wide carriage, 5 column work received. This machine will have great value. $400.00, is to my mind all right as to price. I want to be able to show this machine and take orders for it next July at the Convention of New York State bankers, which is about as important event as the American Bankers Assn.

Mr. Henry Wells of Washington, D. C. is to my mind a very good representative. He has shown much ability in previous ventures. I would endorse his application for agency, though it is simply impossible to predict success in our business. Men of ability in other lines have done so poorly in this and other lines like typewriters, that it is hard to predicate success, though I would myself be willing to give Mr. Wells a thorough trial.

As to Maryland, I will have to ask indulgence in my

Defendant's Exhibit "Manny Letters," stipulated in from Burroughs case.

own belief in my getting all that there is in that state by my own personal work, aided by my sub agent in Baltimore.

Have you the 25 machines ready? I will take them as stated, but not any sooner, as I must have time to turn around.

Is there any stock for sale at $115.00?

Yours truly,

WALTER B. MANNY.

[Same Letter-Head as No. 1.]

June 17, 1897.

MR. E. G. LANGHORNE, Secy.,

St. Louis, Mo.

Dear Sir:

Thank you very much for your kind expressions in yours of 15th inst.

Will return the wide carriage machine to-morrow, by freight.

I would very much like to know about the time you will have ready the new improvements of different kinds, which you are at work on, as it will in a degree enable me to direct my time and that of my agents,—Of course, I do not intend to advise agents of anything new coming out; but as I must do much of the planning for them, full knowledge of what is coming may be very valuable to me.

I am working hard and successfully, and am inclined to think I will be able to hold the Summer business up fairly well. I have already overcome the loss of the 2 weeks when we were all so much disturbed.

Yours very truly,

WALTER B. MANNY.

On investigation I find circulation of Banking Law Journal is but 1500. It covers same field as American

Defendant's Exhibit "Manny Letters," stipulated in from Burroughs case.

Banker, only much less of it. I think it wise to not mix up in the banking journals until we find what we are getting out of the American Banker. As long as we are in but one, we know where to credit business coming from advertising in Bank journals.

I have replied as per enclosed to the letter you sent. I offer my opinion in this matter for what it may be worth. I will always try to be as careful with your money, as with mine own.

[Same Letter-Head as No. 1.]

Jan. 6, 1898.

MR. E. G. LANGHORNE, Secy.,
St. Louis, Mo.

Dear Sir:

Send to Boston office:—dozen ribbons, lot of catalogues and instruction books of both kinds.

When, oh when? are we to get some new catalogues?

Can you ship to Boston office a broad frame machine, even it is one of your sample lot? I have a case against Comptograph and they are tired of waiting on us and must have double column work. Give me information on this point.

Yours very truly,

WALTER B. MANNY.

[Same Letter-Head as No. 1.]

June 6, 1898.

MR. E. G. LANGHORNE, Secy.,
St. Louis, Mo.

Dear Sir:

Express to this office, 5 broad frame machines as soon as possible which will be delivered on waiting orders. One to Cambridge Gas-light Co., Cambridge, Mass. 5 to Boston office. 5 to Rochester office. One to First Natl

Bank, Attleboro, Mass. Comptograph here against us. Two to E. E. Lewis, Fall River, Mass to be called for. One to Natl Bank of Rhode Island, Newport, R. I.

Defendant's Exhibit "Manny Letters," stipulated in from Burroughs case.

I will send long more instructions so as to make up 35 in all, as I wish to be once more equipped for pushing business.

Yours very truly,

MANNY.

DEFENDANT'S EXHIBIT CANNON-LANGHORNE LETTERS.

Defendant's Exhibit "Cannon-Langhorne Letters," stipulated in from Burroughs case.

[Letter-Head of Burroughs Adding & Registering Machine Co., Ld.]

LONDON, Feb. 24, 1897.

THE AMERICAN ARITHMOMETER CO.,
St. Louis, Mo.

Dear Sirs:

I have your favor of 11th enclosing proof of work done on broad frame. I hope you will send us one of these machines directly—as quick as possible and let us know how you are getting on with the type writing connection.

Many thanks for what you say about supplying decimal machines. When dealing with this question I will arrange for delivery so as not to inconvenience you more than is absolutely necessary. Just at the moment I am waiting the return of Mr. Hooley from Monte Carlo where he has gone for a few days rest. Directly he gets back I think he shall get to sharp business.—I have good reason for saying this—This refers to all the contracts, if not, I shall hope finish the Continental contract alone thro the Continental channel next month—probably tho'

Defendant's Exhibit "Cannon-Langhorne Letters," stipulated in from Burroughs case.

before this reaches you you will be having cables from me.

Yours faithfully,

W. J. CANNON.

Instead of addressing letters c/o B. A. & R. Co. Silver St. it would be better if you simply put "W. I. C. Lincoln" England—as then they reach me in my bag which comes to wherever I am—in the other case the letters go to Silver St. & sometimes do not reach me for hours.

Mar. 6, 1897.

W. J. CANNON, ESQ.,
Lincoln, England.

Dear Sir:

Yours of the 24th to hand. We are working on the broad frame as before advised, and hope within the next six weeks to forward a perfect device to you.

The typewriter attachment is being taken up by Mr. Burroughs, but so far there is nothing we can report. He says, however, that he can bring it out successfully.

We hope on the return of Mr. Hooley you will be able to take up the sale of the colonial patents, and will be able to bring through the sale of all of them together.

In the future your letters will be addressed as requested. We presumed they would go to you more directly if addressed care of the B. A. & R. Machine Co.

Yours very truly,

AMERICAN ARITHMOMETER CO.,
E. G. LANGHORNE,
Secretary.

DEFENDANT'S EXHIBIT CAHILL LETTER.

Defendant's Exhibit "Cahill Letter," stipulated in from Burroughs case.

[Letter-Head of Burroughs Adding & Registering Co., Ld.]

LONDON, Sept. 15, 1897.

THE AMERICAN ARITHMOMETER CO.,
St. Louis, U. S. A.

Dears Sirs:

We are anxious to have an Indicator (such as you have fitted to the Broad Frame Machine) attached to one of our Duplicating Machines. Would you kindly make one for us and send it attached to a Duplicator— so that we might not have any difficulty about fitting it up. We have just sold a machine to one of our customers subject to the condition of an Indicator being supplied along with it, and we would therefore be much obliged if you would kindly put this matter in hands as soon as you possibly can. I need not make any suggestions about this Indicator for I feel quite sure you know & will be able to make exactly what is required.

Yours faithfully,
BURROUGHS ADDING & REGISTERING MACHINE CO. LTD.
D. CAHILL,
General Manager.

Exhibit "Invoice."

Defendant's Exhibit St." Louis Trust Co. Invoice," stipulated in from Burroughs case.

DEFENDANT'S EXHIBIT ST. LOUIS TRUST COMPANY INVOICE.

ST. LOUIS, Feb. 27, 1897.

ST. LOUIS TRUST CO.,

St. Louis, Mo.

Dr. to AMERICAN ARITHMOMETER COMPANY,

—Owners and Manufacturers of:—

THE BURROUGHS REGISTERING ACCOUNTANT,

The Most Convenient and Reliable Adding Machine in the World.

Terms Cash.

Checks Payable to The Company. 2102 Wash Street.

To Machine 1454,	$375.00	
To 1 doz. rolls Broad R. & P. paper,	3.00	$378.00

To ST. LOUIS TRUST CO

City

THE AMERICAN ARITHMOMETER COMPANY hereby agrees that if this Burroughs Registering Accountant No. 1454 or its substitute shall at any time within one year from this date, get out of repair under ordinary usage, it will repair same without charge to the purchaser.

This 27th day of Feby 1897

AMERICAN ARITHMOMETER COMPANY,

Per E. G. LANGHORNE

Secy.

Written on the back of the foregoing:

ST. LOUIS 3/2/97

It is hereby agreed that the Broad Printing frame will be put on this machine at a cost of $15.00 & that said frame shall be completed by May 15th 1897—& will then be put on without further delay.

AMERICAN ARITHMOMETER CO.

By E. G. LANGHORNE, Secy.

No.....

Defendant's Exhibit "St. Louis Trust Co. Invoice," stipulated in from Burroughs case.

ACCOUNTS PAYABLE.

SAINT LOUIS TRUST CO., ...To American Arith Co. Dr.

Address.....

1897	In full for Arithmometer #1454, complete	$375.00

I certify the above amount to be correct.

.....

Received, March 8th 1897., of SAINT LOUIS TRUST CO., Three Hundred & Seventy-five /100 Dollars, in full for above amount.

$375.00 AMERICAN ARITHMOMETER CO.

Per B. W. TYLER.

DEFENDANT'S EXHIBIT WELLS LETTERS.

Defendant's Exhibit "Wells Letters," stipulated in from Burroughs case.

HENRY WELLS, successor to
JOHN B. WIGHT,
Real Estate Loans, Insurance,
Ames Building,
1410-1412 G St. N. W.,
Washington, D. C.

January 22nd, 1898.

AMERICAN ARITHMOMETER CO.,
Saint Louis, Mo.

Gentlemen:

Your favor of the 20th received, with bill for four dozen rolls of paper for the Central National Bank. I enclose three location slips, one for the broad machine, and two for the small machines. Mr. Langhorne has just said "good-bye," and I am very glad that he has spent so much time here, not only for the instruction he has given Mr. Newman and myself, and also because he has seen the situation regarding the difficulty in working in the departments in this city. On his return he will

Defendant's Exhibit "Wells Letters," stipulated in from Burroughs case.

have a very close report of the days he has spent here. The broad frame machine is first class, and I think there will be no difficulty in selling quite a number of them here. The Lincoln Bank have been given the small machine, but I do not think they will keep it as the larger machine seems to be more of their like. I shall have to wait until after the Directors meeting next Thursday, before they can decide. The small machine received today has been exhibited at several places, and has been deposited on trial at the Gas Company Office, and there is no doubt but that they will purchase the machine. The Central National Bank, the American Security and Trust, and the Riggs National Bank, will in time take one of the broad machines, as soon as they are ready. I have had the machine with the Bureau of Accounts, Treasury Dept., accepted.

The one in the Collectors Office of the District will be paid for in a short time, as well as the broad frame machine at the Citizens National Bank. Mr. Langhorne and myself have spent a good deal of time between the Capitol and Treasury Dept., endeavoring to push the appropriation for the $2000.00 asked for, and I feel quite confident that we shall receive that in the near future. Mr. Langhorne will explain this matter on his return.

I hope the case for the Gas Co. and the box of paper for the Citizens Bank will be shipped promptly.

Yours very truly,

HENRY WELLS.

[Letter-Head same as No. 1.]

WASHINGTON, D. C., January 25th, 1898.

AMERICAN ARITHMOMETER CO.,

St. Louis, Mo.

Gentlemen:

Your favor of the 21st is received. The box of paper for the Citizens Bank has been received. I enclose you

Defendant's Exhibit "Wells Letters," stipulated in from Burroughs case.

a draft for $250.00 in payment of the machine #1551 recently placed here, with the understanding that as soon as the improvements are completed, that this machine shall be exchanged for an improved one. Mr. Norment of the Central National Bank, was in yesterday, and wants a proposition from you to take back the old machine they have, and put in two of the broad machines. Mr. Langhorne will talk to you about this on his return to St. Louis, as well as other matters relative to exchange.

Very truly yours,

HENRY WELLS.

The Citizens paid me $375 in cash and I did not care to get any D'ft thro' them as they might ask too many questions. Therefore I send my check on Am Security & Trust Co. for $250.

[Letter-Head same as No. 1.]

WASHINGTON, D. C., January 26, 1898.

AM. ARITHMOMETER CO.,

St. Louis, Mo.

Dears Sirs:

Your favor 24th received and also the complaint Book and 2 Rubber Rollers for Woodward & Lothrop. The case is for Gas Co to replace the one with the etching on, which now interferes with the reading of the Register.

I understood Mr. Langhorne (who talked with the Gas people) that he had ordered it shipped. I would suggest shipping the case to Mr. Newman's office as he is much nearer the Gas Co. Will the case fit Broad Frame Machine. I think the Lincoln Bank will take the large machine. The Gas Co the small one. I think the Broad Frame and small machines will be good sellers.

I hope to work through the machine in the Treasury

Defendant's Exhibit "Wells Letters," stipulated in from Burroughs case.

Dept. I will watch it carefully. I lose no time in collecting checks as fast as they are due.

Yours truly,

HENRY WELLS.

[Letter-Head same as No. 1.]

WASHINGTON, D. C., January 31st, 1898.

AMERICAN ARITHMOMETER Co.,

St. Louis, Mo.

Gentlemen:

I enclose herewith check for $125.00., paid me by the Lincoln Bank for the balance on large machine. Please send me the commission due on this amount.

I shall place the small machine where I think a sale will be made.

I hope the machine case for the Gas Co., has been shipped. I have no doubt of their taking a small machine now with them on trial. As soon as Mr. J. T. Langhorne arrives he should take up at once the proposition for the Central National Bank, and Woodward & Lothrop, as to exchanges and putting in the broad frame machine. He will also explain to you, why the Citizens Bank bought the Comptograph as well as our machine.

I am still working on the amount due from the Treasury Dept. through Sec Gage and Senator Cockrell, and while it has been knocked out in both the House and Senate Bills, yet I have hopes of bringing it back again by the amendment in Conference.

Very truly yours,

HENRY WELLS.

Defendant's Exhibit "Wells Letters," stipulated in from Burroughs case.

[Letter-Head same as No. 1.]

WASHINGTON, D. C., February 3, 1898.

AMERICAN ARITHMOMETER CO.,

St. Louis, Mo.

Gentlemen:

I wrote you a short note yesterday, and have very little further to say except in the matter of the Treasury Department. I think that you are entirely wrong in thinking that Mr. Gage is opposed to the purchase of the machines. I think just the contrary. I have seen Mr. Vanderlip recently, and he sent me to a gentleman who will keep watch of the bill as it comes to the Conference Committee, and who prepare a letter to the Conference Committee relative to the machines, consulting Mr. Gage before doing so, which letter Mr. Gage will sign and send to the chairman of the committee; at which time, I shall try to ascertain the names of the persons on the committee, and put in what work I can to have the matter go through. I am, unfortunately on the jury for the rest of this month, and have very little time during the hours of the day when such people can be reached.

I think there is no doubt of the purchase by the Gas Company of another machine.

I saw the American Security and Trust today, and expect in a few days to get their order for the broad frame machine in addition to the one they already have of the old style.

I will see Mr. Pearsall relative to the machine which you say will be furnished in about 30 or 40 days. Mr. Newman has received the case for the Gas Company, and I presume has already attended to the matter. I wrote to you in my last note asking certain questions about it. I also said in my letter that I did not get anything from Columbus, nor did I reply to your letter of

Defendant's Exhibit "Wells Letters," stipulated in from Burroughs case.

January 23rd from New York in as much as you did not give any address.

Very truly yours,

HENRY WELLS.

[Letter-Head same as No. 1.]

WASHINGTON, D. C., February 21st, 1898.

AMERICAN ARITHMOMETER CO.,

St. Louis, Mo.

Gentlemen:

Answering your favor of the 19th, Mr. Norment is not quite satisfied with your proposition, as he thinks that if he buys one new machine outright, that we ought to give him another new one for the old one which he has. I may however, be able to convince him that the proposition is practicable and fair.

I note what you say about Mr. Cannon and his machines at the 2nd National Bank at Danville, Ill. If the cashier of that bank will write a letter to Mr. Cannon, and you get some information relative to Senator Corkrell, it will help matters very materially.

Mr. Newman took the machine from the Cashier's Office, Treasury Dept., Saturday, and gave it a good over-hauling and returned it this morning.

Mr. Stewart, whom you met in the cashiers office has spoken several times about your not returning to "speed" the machine. Whether Mr. Newman can do this or not, I do not know, but it might be well to inform him on the subject, so that it can be done in case it is necessary.

I hope to be able to place some of the machines I have in a very short time, and expect very soon to get a check from the Gas Company, for the small machine which they are now using.

I have very little faith in doing anything at the Geolog-

ical Survey. Mr. Newhall to whom you exhibited the broad frame carriage, is willing to pay for one-half, and I will try to find some other department that will join him in the purchase of the machine.

Defendant's Exhibit "Wells Letters," stipulated in from Burroughs case.

I send location slip for #6009.

Very truly yours,

HENRY WELLS.

DEFENDANT'S EXHIBIT MANNY TELEGRAM.

Defendant's Exhibit "Manny Telegram," stipulated in from Burroughs case.

[Western Union Telegraph Blank.]

New York Jan. 31, 1898.

AMERICAN ARITHMOMETER CO.,

St. Louis, Mo.

Express Broad frame Model to Cambridge Gas Light Company Cambridge Mass for Exhibition and return do this immediately or Comptograph wins.

MANNY.

On back of telegram in blue pencil:

W B M
Cambridge
Gas L Co
Camb
Mass

Handle

Nat X—Pd
B F #1951

Defendant's Exhibit "Langhorne Memorandum," stipulated in from Burroughs case.

DEFENDANT'S EXHIBIT LANGHORNE MEMORANDUM.

Ship 2-4-98

Brd. Frame Mch. #1951
to Cambridge Gas L. Co
Cambridge
Mass

Shipped
2/4/98
C
Nat X—Pd. Chg W B M

Defendant's Exhibit "Langhorne Letter," stipulated in from Burroughs case.

DEFENDANT'S EXHIBIT LANGHORNE LETTER.

RIGGS HOUSE.

WASHINGTON, D. C., U. S. A.,
January 19th, 1898.

E. G. LANGHORNE, ESQ.,
#2102 Wash St., St. Louis, Mo.

Dear Sir:

I have been very busy all day having called on a number of the banks and departments here, at which places, the broad frame machine met with great favor. I first exhibted it at the Riggs National and believe that I will succeed in selling Mr. Brice two. While they are not willing to give up the Chicago machine, Mr. Brice is very much pleased with the work of our broad frame and I have an appointment to meet him tomorrow at eleven o'clock, at which time I hope to get an order for two machines.

I next called at the Citizens' National Bank, and to my sorrow found, owing to delay in getting here, they had bought one of the Chicago machines, but have succeeded in selling them one of ours also. This, of course, is not

Defendant's Exhibit "Langhorne Letter," stipulated in from Burroughs case.

as much as having sold them the two machines. Matters had gone to that point that it was useless to make them a proposition in the way of inducement to take more than one machine.

The small machine met with such favor at several places that I wired you, to ship me another one and have your telegram in answer, stating machine via Adams Express.

You ask if I expect to go to New York before returning. I am not able to answer this just now but rather think I may go there as I received a telegram from Wyeth in regard to the scale business which may take me to New York. At any rate, I can see enough here to keep me in Washington the balance of the week.

Mr. Wells is very glad that I have at last come to see him and considers my presence here of great value both to our company and himself.

I have been working hard all day and I think have done considerable good. I find the banks here are all furnished with a statement by the Clearing House for this sort of work, to which they are all wedded, and it is almost impossible to convince them that they can use something else.

I enclose two or three slips taken off today on these statements, two on our machine and one on the Chicago machine. You will notice that the ruling is not right for our machine but the Citizens' National have agreed to have statements ruled especially for this work, and I think everything will be satisfactory to them.

I have an appointment to meet Senator Cockrill and Major Pierce tomorrow in regard to the appropriation, and hope my call may result in some good, although Mr. Wells thinks the chances are poor for doing anything at this time, and as stated in my letter of last night, it may be that we will either have to take our machines out of

Defendant's Exhibit "Langhorne Letter," stipulated in from Burroughs case.

the Treasury Department now or leave them there another year before we can have a chance to get this appropriation through again. Please wire me on this point on receipt of my letter.

As it is getting late and I have an appointment in an hour, will not write more tonight. Will keep you fully advised as to my movements. Until you hear from me further, continue to write to this address.

With best wishes.

Yours very truly,

JNO. T. LANGHORNE.

Defendant's Exhibit "Boyer Machine Co.'s Letter," stipulated in from Burroughs case.

DEFENDANT'S EXHIBIT BOYER MACHINE COMPANY'S LETTER.

December 29, 1896.

W. J. CANNON, ESQ.,
Lincoln, England.

Dear Sir:—

We herewith enclose itemized list of the Machinery; Special tools; Cases for taking care of the Machine ports; symbol cards; Blue prints, etc. The list is an inventory of the Machinery and tools now being used by the American Arithmometer Co., and with which they are, by employing 50 men, turning out 50 Burroughs Registering Accountants per month. (This output can be doubled by an outlay of from three to five thousand dollars for additional Machinery).

All of the Machinery will be of the latest improved patterns, and the best make, and will be fitted up with the special tools necessary to manufacture the parts of the Burroughs Registering Accountant.

All special tools will be made of the very best material, and the workmanship will be in every particular *first-class.*

Defendant's Exhibit "Boyer Machine Co.'s Letter," stipulated in from Burroughs case.

The dies will be made with a view to turning out the work in perfect condition, in the shortest possible time.

The American Arithmometer Co. have formerly notified you that you would be required to furnish the building; benching; shafting and pulleys; motive and lighting appurtenances for the factory, and we herewith confirm their notification.

After the above have been furnished by you, we will agree, within nine months from the receipt of your order, (accompanied with remittance as hereafter set forth) to set up in England, ready for service, a plant composed of the tools and Machinery set forth on the enclosed list, for the sum of thrity-three thousand, nine hundred and eighty dollars and thirty-five cents, ($33980.35), said amount to be paid as follows:

25% to accompany your order for the plant.

25% to be paid on 90 days from date.

25% to be paid within 150 days from date of order, and the remaining 25% to be paid when the factory is turned over to you, in running order.

Our bid for furnishing the plant as set forth, is open for acceptance until Wednesday, February 10th, 1897. We designate Feb. 10, 1897, as the latest date open for acceptance, as we can at that time make contracts for work to run us until late in the Fall, which work we do not want to lose, unless we are engaged in manufacturing the plant you desire.

Upon receipt of this letter, if you are disposed to place your order with us, have your contract drawn up, and forward same, (in duplicate) with your order and remittance by registered letter, and we will upon receipt of said contract, if it is acceptable to us, and in accord with the terms and conditions as set forth in this letter, sign and return to you, and you will have a receipt from the Post Office Department, designating the date of the

Defendant's Exhibit "Boyer Machine Co.'s Letter," stipulated in from Burroughs case.

delivery of your order to us, and the period of nine months for the manufacture and setting up of said plant shall bear the same date as shown by registered delivery receipt.

At the request of Mr. E. G. Langhorne, we have carefully revised the prices, and have put them as low as we possibly can, if we turn out the quality of work you should have.

We hope upon receipt of this letter you will take immediate action, and will notify us as soon as possible whether you wish us to manufacture the plant for you.

We think there are only a few manufacturers in the United States who can turn out the plant you desire, and we respectfully refer you to Messrs. Brown & Sharpe, of Providence, R. I. or the Pratt and Whitney Co., Hartford, Conn., and if you wish, you can get from them a bid for manufacturing the plant covered by the list herewith.

Awaiting your prompt reply, we beg to remain,

Yours very truly,

BOYER MACHINE CO.

JOSEPH BOYER,

Prest.

DEFENDANT'S EXHIBIT BOYER MACHINE COMPANY LIST OF ENGLISH TOOLS.

Defendant's Exhibit "Boyer Machine Co. List of English Tools," stipulated in from Burroughs case.

LIST OF GENERAL AND SPECIAL TOOLS FOR
BURROUGHS ADDING MACHINE PLANT.
—Submitted to—
W. J. CANNON, - - - - - LINCOLN, ENGLAND.

1897:
Boyer Machine Co.,
St. Louis,
Mo.

LIST OF GENERAL TOOLS FOR BURROUGHS' ADDING MACHINE PLANT.

Submitted to W. J. Cannon,
Lincoln, England.

---

1 Letter plate rolling Machine.
1 Dividing head.
1 Case hardening pot.
1 Automatic vise.
3 Measuring Machines for shafts.
1 Set plug gauges, (about 25.)
1 Set patterns for all cast parts of Machine.
2 Emery wheel stands.
1 Tapping head.
1 Gasoline cleaning outfit.
1 Bending Machine.
1 Rattler. (keg.)
1 Wire cutter.
1 Foot press.
1 Grinder for rubber rolls, (attachement for engine lathe.)
1 Saw for brass sheet.
1 Assembling press.
1 Brainard Milling Machine #3.
1 Engine lathe, 16″, 6′ with chucks, etc.

Defendant's Exhibit "Boyer Machine Co. List of English Tools," stipulated in from Burroughs case.

1 Brainard Milling #3 with extra movement.
1 Vertical attachment for above.
1 Brainard Milling Machine #5.
1 Brainard Milling Machine vise.
1 Prentice Drill Press, 18".
2 Sigourney Drill Presses, 3 Spindle.
1 " " " 1 "
1 Slate " " 1 "
3 Sigourney " " (bench.)
1 Chuck each for all drill presses.
1 Brown & Sharpe Universal Hand Lathe.
1 Small Pratt & Whitney Screw Machine.
1 Back tool holder and wire feed.
3 #2 Pratt & Whitney Screw Machines, with improved hardened chucks.
Back tool holders; front tool holders; independant stops and wire feed, also wire.
1 Support for each machine.
1 Work table for each Machine, (10 in all.)
1 #53 Ferracute Press.
1 #51 " "
16 Bolster plates.
1 Iron table for straightening side frames.
1 Blower and forge.
1 B. & S. Tool grinder.
Belting for all Machines.
13 Vises.
4 Cases for parts.
B. & S. Screw-slotting devices, with bushings, (12.)
8 Sets of straightening tools; consisting of straight edges; surface, gauges, squares, blocks and hammers.
4 Sets of pans to fit in cases for holding parts.

BLANKING DIES.

—

Special sub-press for the following symbols: 210 R. & L; 611; 1014 and 1016.
No. 1 Sub-press for the following symbols: 911; 722; 617; 613; R. & L; 610; 529 R. & L; 226, 218; 214 R. & L; 710 R. & L; 311; 223; 273; 914; 813; 722 R. & L; 513; 310; 119 and 211 R. & L.
No. 2 Sub-press for the following symbols: 711 L; 619; 517; 715; 816; 910 L; 918; 917; 913; 528 R. & L; 512; 412; 411 R. & L; 312; 227 L; 110 R. & L; 1010 and 516.
No. 3 Sub-press for the following symbols: 920 R. & L;

910 R; 823; 820; 815; 811 R. & L; 816; 713; 711 R; 622; 511; 413; 220; 712 R. & L; 623; 527 L; 510 R. & L; 421; 219 R. & L; 120; 117; 922; 824; 216; 116; 916; 827 and 519.

Defendant's Exhibit "Boyer Machine Co. List of English Tools," stipulated in from Burroughs case.

No. 4 Sub press for the following symbols: 717; 915; 825; 711; 527 R; 522; 215; 1013; 926; 924; 923; 821 R; 817 R. & L; 810; 714; 618; 523; 521; 217 R. & L; 114; 113; 112; 229; 227 R; 118; 524; 1012; 1011; 925; 837; 926; 745; 624; 620; 515; 428; 222; 337 and 530; 414; 313; and 821.

Forming Dies.

—

Symbols: 210; 620; 917; 923; 217 L; 217 R; 710 R. & L; 1011; 618; and 510 R. & L.

Perforating Dies. (89 in all.)

—

Special Sub press for the following symbols: 212-212-212; 1014; 1016; 611-611-611; 210 R. & L and 211 R. & L.
No. 1 Sub-press for the following symbols: 610-610; 529 R. & L; 214 R. & L; 616; 423-422; (one) 311-311-311; 710-710.
No. 2 Sub-press for the following symbols: 119; 226; 613 R. & L; 911 and 723.
No. 3 Sub-press for the following symbols: 619; 614; 813; 722; R. & L 218; 917; 513; 310 and 517.
No. 4 Sub-press for the following symbols: 522; 413; 415; 412; 425; 623; 120; 215; 227 R; 229; 226; 817; 618; 414; 821; 313; 113; 112; 820; 815; 711 R; 622; 518 R. & L; 918; 715; 526; 511; 811 R. & L; 716; 713; 717-717-717; 512; 411 R. & L; 411 R; 411 L; 816; 910 L; 913; 529 R; 916; 220; 215; 718; 712 R. & L; 527 R. & L; 510 R. & L; 219 R. & L; 117; 1010; 922; 324; 216; 116; 920 R; 920 L; 910 R; 823; 312; 227 L; 110 R; and 711 L.

Reamers.

—

Hand: Dia..1865″ — ¼″ — .374″ — 3/3″ and ½″, one each.
Screw Machine: (with taper shanks,) Dia..14275″ — .157″—.177″—.183″—.184″—3/16″—.248″— .252″ — .253″ — .258-411-315-316″ — 5/16″ — .3735″ — 3/8″ — .377″ — .378″ — .380″ — 7/16″ — .493″ — .499″ — .500″ — .503″ — .624″ — .626″ — and .628″, one each.

Defendant's Exhibit "Boyer Machine Co. List of English Tools," stipulated in from Burroughs case.

Twist Drills.

1 dozen each #9; 15; 17; 18; 20; 27; 28; 29; 30; 31; 36; 39; 41; 3/64; 7/32; 15/64; ¼; 17/64; 42; 43; 50; 1/16; ⅛; 5/32; 1 19/64; 23/64; 27/64; 31/64; 9/16; 39/64.

Taps & Dies.

½ dozen each, Taps; 6-32; 8-32; 5/32; 40; ⅛; 44. Dies; ¼; 24; 3/16; 32; 6-32; 8-32; 5/32; 40; ⅛; 44.

Saws.

Screw slotting; 6 each, #16; 18; 20; 21; 22; 24 and 25.
Metal slitting, 3 each, 3/32″; ⅛″ and 1/16″.
16 Taper broaches.

List of Back Forming Tools for Screw Machines.

Symbols.

45	300	552	751	956
46	330	553	752	959
100	333	554	753	962
101	350	556	754	963
131	350	558	755	1036
132	355	562	756	1050
133	356	563	758	1051
134	357	564	759	1052
135	358	590	802	1055
150	359	590	831	1056
200	362	600	832	1060
201–½	400	600	833	B– 1065
202	400	600	836	B942
203	402	601	840	B868
205	431	630	843	B569
206	434	631	849	B856
208–½	444	650	851	B721
209	450	651	853	B518
230	457	653	854	B509
231	460	655	855	B310
233	462	655	860	B293
234	501	656	860	B212
237	504	660	861	B166

Defendant's Exhibit "Boyer Machine Co. List of English Tools," stipulated in from Burroughs case.

247	505	701	863
250	506	701	902
251	507	701	903
252	508	702	906
253	531	702	930
254	532	702	936
255	533	703	940
258	535	704	941
260	538	704	942
262	545	705	944
263	547	706	952
264	548	706–½	954
293	549	743	954
293	550	750	955

10 Screw Machine beading tools.
8 Burring countersinks.
24 Parting tools.
6 Rounding tools.
6 Centering tools.

SPECIAL TOOLS.

Symbol:
1070 2 Arbors.
1080 Bender.
891 Leather washer cutters.
Tools for making coil springs.
Wire reel.
Wood clamp.
Iron clamp.
Drill rod for arbors; 15 lbs.
Testing Machine.
12 pair plyers.
Hand wire cutter.
270 Machine for 270.
279 " " 279.
392 Jig for.
392 Counterbore.
278 Bending jig.
438, 484, 486 } Bending jig.
518 2 Jigs for
518–½ 1 jig for.

Defendant's Exhibit "Boyer Machine Co. List of English Tools," stipulated in from Burroughs case.

525 Bending device.
581 " "
582 " "
587 " "
589 " "
682 Machine for bending.
825 " " "
885 2 Machines for bending.
1071 Bending Device.
1090 Boring jig for.
D—910 L. Vise jaws.
D—910 L. Cutters.
C—910 L Test.
D—917 Vise jaws.
D—917 Cutters.
K—926 Vise jaws.
C—9—33 Jig.
E—9—33 Jig.
E—9—35.
936 Drill jig.
C—9—35.
9—36 Test.
E—9—40 Drill jig.
C—9—50 Pinning jig.
10—1 Jig.
C—413—1 Test Jig.
C—413—2 " "
C—4—3 " "
C—415 " "
7—1 R. & L. 2 counterbores and 1 jig.
716 2 Test jigs.
716 Counter bore.
D—7—21 Milling jig.
C—7—21 Test jig.
7—30 Spinning jig.
E—7—41 Drilling jig.
711 L Pinning jig.
7—40 Squaring block.
7—30 Face mill.
7—30 Drilling, spinning and pinning jig.
E—8—20 Spinning jig.
D—813 Automatic vise jaws.
E—8—21 Milling jig and 2 cutters.
C—8—21 Test.
D—8—23 Vise jaws.

Defendant's Exhibit "Boyer Machine Co. List of English Tools," stipulated in from Burroughs case.

E—8—24 Spinning.
8—35 Test.
E—3—50 Drilling jig.
C—8—50 Pinning.
C—8—50 Test.
6—41 Drill for 600.
C—6—60 Test.
C—2—70 Bending jig.
E—7—17 Milling jig.
E—7—15 Milling jig.
C—6—31 Riveting stand.
6—33 " "
9 studs for drill press for spinning on collars.
4 spinning tools.
Jaws and sets, 1—4; 1—3; 1—8, etc.
E—1—30 Jig.
E—1—80 Test jig.
E—1—31 Drilling jig.
E—1—50 Drilling jig.
C—1—50 Pinning.
C—2—2
3—5
8—12
2—4 Saw plate.
Punches, starters and sets, 24 each.
E—2—21.
2—22 Drilling jig.
44 Assembling plates.
E—2—42 Pinning jig.
E—2—43 Drilling.
2—50 Assembling jig.
2—31 Assembling plate.
2—50 Spacing tools.
3—55.
7—55 Set.
3—30 Riveting.
367 Counter bore.
412
421
415
820
1013
} Special set and plate.
C—591 Test.
5—30 Winder.
5—32 Drilling and pinning.

Defendant's Exhibit "Boyer Machine Co. List of English Tools," stipulated in from Burroughs case.

E—6—21 Drilling jig.
C—6—22 Test.
C—6—31 Riveting.
4—22
423
5—3
6—8
3—6
6—5
8—4
} Punch head.
13 Hub Assemb. plates.
Collar spreader.
Block for power press and 4 rivet holders.
6 Rivet sets with holders for power press.
9—23.
9—24 Machine for assembling.
6—1 and 6—3; die.
2—21 Die.
6—3 Milling Machine attachment, 4 special cutters.
6—3 Tools for spreading.
6—3 2 Grinding guide plates.
6—3 Assembling block.
Try square.
2—3 Die.
E—310 Counterbore.
310 Test.
E—4—1 Facing tool.
C—4—2 Forming jig.
4—2 Testing jig.
E—45 & 46 Tapping.
D—205 Gang of saws on arbor.
D—205 Vise jaws.
D—293 " "
D—293 Gang cutter.
E—293 Drill jig.
E—293 Centering tool.
D—300 Chuck.
D—300 Two drill jigs.
E—300 Counterbore.
E—134 Box tool.
D—350 Vise jaws.
D—350 Straddle mills.
D—352 Vise jaws.
D—400 " "
D—400 Gang saws on arbor.

Defendant's Exhibit "Boyer Machine Co. List of English Tools," stipulated in from Burroughs case.

D—462 Auto. vise jaws.
D—462 2 Cutters.
D—501 Vise jaws.
E—531 Drill jig.
C—658 Test.
C—659 "
741 Counterbore.
760 Taper attachment.
760 Test.
E—331 Counterbore.
E—338 Centering tool.
D—840 Vise jaws.
D—840 Straddle mills.
D—840 2 Drill jigs.
843 Counterbore.
D—905 Vise Jaws.
D—905 Gang saws on arbor.
590.
1056 Knurling tool.
E—1056 Drilling jig.
D—1056 Vise jaws.
D—1056 Straddle mill collar.
B—166 Mill jig.
E—166 2 Drill jigs.
B—166 2 Boring tools.
B—166 2 Facing tools.
B—166 Boring fixture.
E—366—1 Drill jig.
E—366—2 " "
E—366 Centering tool and bit.
$\frac{1}{2}$" Counterbore; $\frac{1}{4}$" bit.
$\frac{7}{8}$" " $\frac{1}{4}$" bit.
568 Casting cleaner.
D—568 Reamer.
E—568 Drill jig.
B—568 Mandrel.
D—569 Straddle mill and mandrel.
569 Milling jig.
C—569 Leveling jig.
C—569—1 Drill jig.
C—569—2 Tapping jig.
6 $\frac{1}{4}$" Centering tools.
6 $\frac{3}{8}$" " "
E—665 2.3765 bits.
E—665 Drill jig.

Defendant's Exhibit "Boyer Machine Co. List of English Tools," stipulated in from Burroughs case.

E—665 " "
D—665 Straddle mill.
D—665—1 Mill jig.
D—665—2 " "
D—665 Cutter.
D—665—3 Mill jig.
C—665—3 Drill jig.
E—665—1 2 Drill jigs.
E—666—2 Counterbore jig.
E—666 Counterbore jig.
865 3/16 special mandrel.
E—865 Drill jig.
867 2 Cutters; 2 reamers.
867 2 Gauges.
867 Lathe chuck.
E—853 Bit.
B—867 2 Box tools.
E—867 Facing tools.
E—868 Drill jig.
1—868 Counterbore.
1065 10 Drills and countersinks.
1065 Drill jig.
1065 Tap.
1065 Tap jig.
E—1065 Drilling jig.
1065 Emery wheel fixture and leveling plate.
D—1065 Face milling jig.
1065 3/16 Bit.
1065 Bit and centering tool.
E—1065.
369 Drill jig.
1065 4 counterbores and 1.¼ centering tool.
D—527 Auto vise jaws.
C—527L Test jig.
528 Counterbore.
D—529 Vise Jaws.
D—530 Arbor.
C—610 80 Cutter.
C—610 Filing jig.
611 Twisting Machine.
C—611 Filing jig.
C—611 Bending jig.
D—613 Auto. vise jaws.
D—617 " " "
C—623 Bending jig.

Defendant's Exhibit "Boyer Machine Co. List of English Tools," stipulated in from Burroughs case.

D—710 Jig.
D—710 End mill.
E—710 Drill jig.
E—710 Milling cutters.
C—711 Bending plate.
D—713 Vise jaws.
C—713 Bending plate.
D—714 Vise jaws.
E—714 Drill jig.
D—715 Vise jaws.
E—715 Jig and milling tool.
D—716 Vise jaws.
C—716 Test.
E—716 Jig and milling tool.
D—717 Vise jaws.
D—717 Bending jig.
D—718 Auto. vise jaws.
D—718 Cutters and arbor.
C—718 Test.
D—718 Vise jaws.
D—718 Cutter.
722 Bender.
722 Test.
C—815 Bending jaws.
C—816 Filing jig.
817 Counterbore.
E—821 Counterbore.
E—821 " jig.
E—821 Drilling jig.
D—824 Auto. vise jaws.
C—824 Test.
D—910 R Auto. vise jaws.
E—924 Drill jig.
D—924 Vise jaws.
C—924 Test.
D—926 Auto. vise jaws.
C—926 Test.
D—927 Gang saws.
D—927 Vise jaws.
C—1014—1 Finger former.
C—1014—2 Bending jig.
C—1016 Forming jig.
25 Face mills of various sizes.
12 End mills.
Side Frame tools.

Defendant's Exhibit "Boyer Machine Co. List of English Tools," stipulated in from Burroughs case.

Special saw.
6 End mills.
17 Counterbores.
16 Bits.
2 Centering tools.
Jig leveling feet.
" surfacing bosses.
" milling feet.
" for milling narrow cut.
" for milling back.
" for drilling feet.
" for drilling shaft and screw holes.
Plate for drilling bosses.
Jig for drilling case pin holes.
D—1065 Milling jig for lock.
1065 Milling jig for cars.
1065 Straddle mill and arbor.
Key hole jig.
509 Drill and reamer.
E—1065 Drill, reamer and jig.
1067 Face milling jig.
1067 5 Milling jigs and tapping jig.
E—110 Counterbore.
E—120 Auto. vise jaws.
C—120 Slot, milling and test.
E—210 Countersinking plate.
210 Counterbore, (2.)
C—214 Bending Machine.
D—215 Vise jaws.
D—217 Vise jaws.
D—223 Gang saws and arbor.
D—223 Vise jaws.
D—224 " "
D—225 " "
D—227 " "
C—273 Loop Former.
E—310 Jig and counterbore.
E—311 Counterbore.
B—311 Turning arbor.
D—311—1 Vise jaws.
D—313 Cutter.
D—313 Vise jaws.
C—313 Test.
D—412 Vise jaws.
D—412 Milling jig.

Defendant's Exhibit "Boyer Machine Co. List of English Tools," stipulated in from Burroughs case.

412 Test.
D—413—1 Vise jaws.
C—413 Bending plate.
D—413 2 Vise jaws.
D—413 Cutter.
C—415 Bending plate.
C—415—2 Test.
C—421 Bending plate.
C—512 Twisting jig.
512 Form.
D—516 Turning and milling arbor.
D—516 Cutter.
C—517 Forming jig.
D—518 Turning and milling arbor.
D—519 Cutter.
D—521 Vise jaws.
C—521 Test.
C—522 Bending plate.
E—523 Milling jig.
E—523 Hollow mill.
D—523 Vise jaws.
C—526 Bending plate.
E—300 Device for holding collars, with 8 split bushings.
2 Slot-burring tools.
1 Gas stove.
1 Bluing device.
Music wire cutters.
Wire straightener.
1092 Mould; rubber feet.
291 Moulds; key buttons.
591 Ink ribbon.
592 Tape for ends of ink ribbon.
670 Dress hooks.
691 Type.
692 Paste-board.

Defendant's Exhibit "Boyer Machine Co Bill," stipulated in from Burroughs case.

DEFENDANT'S EXHIBIT BOYER MACHINE COMPANY BILL.

March 5th, 8

THE BURROUGHS ADDING & REGISTERING MACHINE CO., LTD.,
Nottingham, England.

To Lot of General and Special Tools, constituting Plant for the manufacture of the Burroughs' Registering accountant as per our Proposition Dec. 29th, 1896, to Mr. W. J. Cannon, Lincoln, England		33,980 35	
To Cost of Special Tools for Manufacturing New Check Table in excess of estimated Cost of those contemplated for Old Check Trade in Proposition		194 00	
To Lot of Extra Special Tools required for manufacturing the Burroughs' Registering accountant arranged for English Currency		762 78	
To Drawing Plan of arrangement of American Arithmometer Co.'s Plant St. Louis		14 34	
1897			34,951 47
May 1	Credit By Cash	7776 00	
July 7	" " "	9224 50	
Nov. 1	" " "	8228 00	
			25,228 50
	Balance due		9,722 97

IN THE CIRCUIT COURT OF THE UNITED STATES, NORTHERN DISTRICT OF ILLINOIS, EASTERN DIVISION.

Comptograph Company, *Complainant,*
vs.
Burroughs Adding Machine Company, *Defendant.*
} In Equity. No. 28,782.

September 26, 1908.

Introduction of evidence on behalf of the defendant in the above-entitled cause, pursuant to informal notice, and by consent, at Room 1625 Monadnock Building, Chicago, Illinois, before Louis Erwin, notary public, acting by consent as Special Examiner in said cause, under the Equity Rule, beginning at 10 o'clock A. M., on Saturday, September 26, 1908.

Present: Mr. John W. Munday, of counsel for complainant; Mr. Edward Rector, of counsel for defendant.

(Second) Deposition of Harry B. Wyeth, for Defendant, stipulated in from Burroughs case.

HARRY B. WYETH, a witness produced on behalf of the defendant, being duly sworn, testified as follows:

Direct Examination by Mr. Rector.

Q. 1. Are you the Harry B. Wyeth who has heretofore testified as a witness on behalf of the complainant in this cause?

A. I am.

Q. 2. I produce and show you what purport to be certain letters written or dictated, and signed, by you, and addressed to Mr. E. G. Langhorne, St. Louis, Missouri, and said letters bearing date January 20, 1897; January 25, 1897; July 15, 1897; July 20, 1897; November 3, 1897; November 20, 1897; December 27, 1897; January 18, 1898; January 22, 1898; January 25, 1898; June 13, 1898;

(Second) Deposition of Harry B. Wyeth, for Defendant, stipulated in from Burroughs case.

June 22, 1898, and July 28, 1898. Will you please examine those letters and state whether or not you recognize them as letters written or dictated and signed by you and sent to Mr. Langhorne on or about the dates which they respectively bear?

A. I do so recognize them.

Q. 3. I also produce and show you what purport to be copies of certain letters written by Mr. Langhorne to you, and dated respectively January 22, 1897; July 17, 1897; November 22, 1897; December 29, 1897, and January 20, 1898. Will you please state whether you received the originals of those letters from Mr. Langhorne and whether they are still in your possession?

A. I did so receive them, and I still have them in my possession.

Q. 4. And are the copies which I have produced true copies of them?

A. They appear to be so.

Mr. Rector: I offer in evidence the correspondence between the witness and Mr. Langhorne which has been identified by the witness, and ask that the same be marked for identification "Defendant's Exhibits H. B. Wyeth Correspondence."

It is stipulated that the correspondence constituting the foregoing exhibit may be copied into the record and the original letters withdrawn.

By agreement, correspondence copied at close of cross-examination.

Cross-Examination by Mr. Munday.

X-Q. 5. You did not produce these letters at the time you were examined in the Universal Company's case; why did you not do so?

A. Because I did not find them. My correspondence with Mr. E. G. Langhorne and the American Arithmometer Company covered a period of six or seven years, and

(Second) Deposition of Harry B. Wyeth, for Defendant, stipulated in from Burroughs case.

there are some thousands of letters. In going over all of these it is not strange that I missed these five. I certainly regret having done so, as I should have been more than glad to have produced them in the case against the Universal Company referred to. In that case the principal issue was as to whether or not there was any invention in adapting a roll-paper adding machine to print on wide sheets, and it seems to me these five letters just produced from Mr. E. G. Langhorne show quite conclusively the enormous difficulty that the American Arithmometer Company had in accomplishing this result.

HARRY B. WYETH.

Defendant rests.

Defendant's Exhibit "H. B. Wyeth Correspondence," stipulated in from Burroughs case.

DEFENDANT'S EXHIBIT H. B. WYETH CORRESPONDENCE.

January 20, 1897.

MR. E. G. LANGHORNE,
St. Louis, Mo.

Dear Sir:—

I note yours of the 18th. Virginia inquiries seem to be frequent of late, but you will notice they are *not* from would be customers. My plans for that trip you have ere this however.

Have you tried heavy rubber under the feet to reduce noise? I have been trying it in one of the banks here, taking a piece of rubber about $\frac{3}{4}''$ thick and about 1" square, cutting a little depression for the foot, and putting a piece under each foot of the machine. It reduces noise far better than Manny's felt pads, and has many other advantages over the felts. Would it not be practicable to supply something in that line to all machines?

Will you tell me if in the new "broad frame" the ex-

Defendant's Exhibit "H. B. Wyeth Correspondence," stipulated in from Burroughs case.

treme width of paper to be used will be an ordinary letter sheet, or will it take any width?

Sincerely,

H. B. WYETH.

H. B. WYETH, ESQ.,
333 Chestnut Street, Philadelphia, Pa.

Dear Sir:—

Yours of the 20th to hand. We note your comments as to Virginia inquiries, and are prepared to admit the force of same. We have cut your order for four Machines to be shipped to Lynchburg, to two Machines, as we do not think you will need more than two.

We have experimented with rubber cushions under the feet of the Machine, and know the advantage of the rubber to deaden the sound, but unless we could furnish a stand with each Machine there is no way we could attach the rubber so as to have it always with the Machine. A rubber sheet like the felt pad Mr. Manny spoke of would be too expensive. How do you attach the blocks of rubber you have been using, to the feet of the Machine; Do you glue it on, or simply set the Machine on the block?

The broad printing frame we are working on is designed to take in paper the width of the sheet on which this letter is written, and will make five rows of figures on a sheet. When we have perfected this frame we can use the same brackets and principles to accommodate a frame any width that may be desired, but of course the broader frame will be made especially, and at considerable extra expense, so the party desiring same would have to understand that they would be charged extra for the frame.

We note letter from Mr. Gooch of Lynchburg, and while same is very nicely written, he is somewhat desirous of bringing us to terms by threatening us with Felt

Defendant's Exhibit "H. B. Wyeth Correspondence," stipulated in from Burroughs case.

and Tarrant and Hopkins. As far as Hopkins is concerned, yourself and the writer will be several years older before the Hopkins Machine is a success, and we hope before many months to effectually settle the Felt and Tarrant People, so your chances for doing business are much better than either of the above parties.

When you visit Lynchburg you can see Mr. Gooch, and if you think he is the man who should represent our Machine, you can make an arrangement with him which will be satisfactory to yourself, but be certain to instruct Mr. Gooch so he can show the Machine up to the best advantage. Herewith we return Mr. Gooch's letter.

With very kind regards from the writer,

Yours truly,

AMERICAN ARITHMOMETER CO.

(Signed) E. G. LANGHORNE

Sec'y.

Enc.

Pennsylvania Office of
ARITHMOMETER CO.
of St. Louis,
manufacturers of
Burroughs Registering Accountant.
H. B. Wyeth, Sales Agent.
333 Chestnut Street. Philadelphia.

Jan. 25th, 1897.

MR. E. G. LANGHORNE,
St. Louis, Mo.

Dear Sir:—

Enclose find check paying #1317 to Bank of Wheeling, Wheeling W. Va. Jan. 14th 199 " Citizens Savings Bk. Lorain, O.—rental.

The rubber cushions under feet of Machine, stay readily by merely having holes slightly cut in them for the feet. Of course if Machine is lifted up the cushions stay on the table or desk, but that is no objection. The bank

Defendant's Exhibit "H. B. Wyeth Correspondence," stipulated in from Burroughs case

that has been using them, have thrown away the feet pads and like the rubber *very* much.

Thank you for "Broad Frame" and Hopkins information, but shall be *very* glad to have a knowledge of how to operate the latter as soon as you can finish same.

I have several letters from Mr. Gooch of Lynchburg, who is very confident of his ability to sell about forty machines in as many minutes apparently, and wants a wire proposition, etc., but I have declined to have anything to do with him till I can see him. Then if he is the right man I shall be *very* glad to have him as an agent, but so far I am unfavorably impressed.

Thank you for Machines sent to Virginia. My present plan is to be in Lynchburg on Feb. 2nd, and from there to Petersburg, Richmond, Norfolk and Portsmouth. I am very skeptical as to the business I shall do here, but shall die trying.

I leave tonight for Wilkesbarre, Scranton, Carbondale and Honsdale, returning last of week.

Sincerely

Received H. B. Wyeth.

July 27, 1897.

HOTEL ANDERSON
Pittsburg, Pa.
Henry McKinnie.

July 15, 1897.

Mr. E. G. Langhorne, Secy.

St. Louis, Mo.

Dear Sir:—

The 1st Natl Bank of Parkersburg, W. Va. wish to use our machine for "check book" work, and to that end want a paper just double the width of our own present slip, which they can fold in the middle to run through the machine. Thus having the figures in the centre of the sheet with space on each edge for writing. The in-

Defendant's Exhibit "H. B. Wyeth Correspondence," stipulated in from Burroughs case.

closed will give you a rough idea. How could you furnish them stock in double width with one ruling in the usual place—can you, in other words, omit one cutting? I do not know whether the idea of your furnishing the stock is feasible or not, but I told these people I should write you, and have you reply to them direct. Will you please do so, sending me copy of your letter. The plan of using the paper as they purpose is feasible I know, but if they can not get the stock from you they will have to go to a printer. Also—could you furnish the paper folded on a roll—have you any way of doing that?

Your attention will oblige

Yours sincerely,

H. B. WYETH.

Jno. Smith		127	18	Whitelaw Reid
J. L. Larrabee		500		Frank McLaughlin
Jones & Co.		10	50	Jno. Wanamaker
H. V. Beasley		1		Smith & Jones
Schul & B.	1	340	17	Jno. Wyeth & Bro.
H. W. Brown		25		Brown Hdw. Co.
Sam Smith		14		Hostetter & Jones
Langhorne D. G. Co.	5	000		Harriet Squeemis.
Buster & Jones		10	50	U. V. Xerxes
	7	028	35	

July 17, 1897.

H. B. WYETH, ESQ.,
Philadelphia, Pa.

Dear Sir:—

We have your letter of the 15th from Pittsburg enclosing sheet with special ruling and have decided before writing the First National Bank of Parkersburg to put the matter before you.

We enclose herewith samples of work taken off our Broad Printing Frame device, which strikes us would be much more desirable for this Bank than the folded paper. The folded paper idea is not feasible for this reason:

Defendant's Exhibit "H. B. Wyeth Correspondence," stipulated in from Burroughs case.

that you cannot wind this paper on spools and make it even. The folded edge will gain over the open edge and soon pull the paper one-sided and cause it to tear. If you will take a strip 6 or 8 feet long and fold it as nicely as you can and try to roll it on a spool you will find this to be true. The English people tried this on the other side, but it was not a success. They are the only ones we have ever heard of trying to use the paper folded in this way.

We would suggest that you take the matter up with the Bank and submit them samples of the work from the Broad Printing Frame, stating that they can use any width of paper from our various sizes up to 11, and that we can furnish them the broadest size on spools if they so desire; or they can use their regular letter heads.

We can supply you with a machine with this device on it should they decide to take one, in the next 30 or 40 days. We believe you saw this device while in the factory, so further explanation in regard to it is not necessary.

How did you find business in Pittsburg? We hope you will succeed in closing a few sales before the end of the month, as we do not want our sales report to go in blank for the month of July.

We have quite a stock of machines on hand and can fill your orders promptly whenever you desire any.

Yours very truly,

AMERICAN ARITHMOMETER CO.

(Signed) E. G. LANGHORNE,

Secretary.

Defendant's Exhibit "H. B. Wyeth Correspondence," stipulated in from Burroughs case.

Received
Pennsylvania Office of July 22 1897.
AMERICAN ARITHMOMETER CO.
of St. Louis,
manufacturers of
BURROUGHS REGISTERING ACCOUNTANT

H. B. Wyeth, Sales Agent,
Room 905, Provident Building,
Philadelphia.

July 20th, 1897.

MR. J. T. LANGHORNE,
St. Louis, Mo.

Dear Sir:—

Replying to yours of the 17th, inst. I have not written the Parkersburg bank about the Broad Frame, as I prefer having same in hand before mentioning it to them, inasmuch as I can get them to purchase the present machine. Then when the Broad comes out I can exchange with them.

You have received location slips for Parkersburg machines ere this, so the Adams agent there is now O.K.

I note yours regarding Lit Bros.

Sincerely

H. B. WYETH.

Defendant's Exhibit "H. B. Wyeth Correspondence," stipulated in from Burroughs case.

Pennsylvania Office of
AMERICAN ARITHMOMETER COMPANY
of St. Louis,
Owners and Manufacturers of
BURROUGHS REGISTERING ACCOUNTANT.

H. B. Wyeth, Sales Agent,
Room 905, Provident Building, Philadelphia.
Telephone 293 Nov. 3rd 1897.

MR. E. G. LANGHORNE, Secy.,
St. Louis, Mo.

Dear Sir:—

I enclose you herewith letters from Marine National Bank of Erie and protected Home Circle of Sharon. To the former I have sent an extra machine and have written that you would advise them as to whether to send machine to you or else give directions to Mr. Thompson for fixing same. To the latter letter I have not replied, since it looks to me as though the machine had made a clear error, and I prefer your adjusting the matter yourself, so please write them direct.

I ordered sent to you yesterday from Pittsburg machine #1318, which has been on trial with Horne & Co. This machine has refused to print in one of the columns at three different times and Bair & Gazzam have been unable to fix same, so rather than take further chances on putting it out on trial elsewhere I had it shipped to you via Freight. Horne & Co. bought the Compt. over our machine because ours broke down these three times, because they could operate the Comp. more rapidly than they could ours, and because their price was $25.00 less than ours there will be very little call for the present machine anyway, if as you intend, the broad frame is to sell at $375.00. It seems to me that an extremely saleable line for us would be a broad frame, printing and

Defendant's Exhibit "H. B. Wyeth Correspondence," stipulated in from Burroughs case.

adding figures, at $375.00, and a narrow machine printing 6 figure and adding 7, at $250.00. My original idea was to have the narrow machine print six figures and add the same, and I still think that this would be the better plan if we are to have only the present machine and a narrow one, but the broad frame being so near at hand puts to my mind an entirely new aspect on the situation.

Thanking you for this opportunity of expressing my views, I am,

Sincerely,

H. B. WYETH.

Please send via express *prepaid* four rolls of narrow paper to both of these banks.

Tyler Co. Bank, Sistersville, W. Va.

First Nat'l. Bank " "

Pennsylvania Office of
AMERICAN ARITHMOMETER COMPANY
St. Louis,
Owners and Manufacturers of
BURROUGHS REGISTERING ACCOUNTANT.

H. B. Wyeth, Sales Agent,
Room 905, Provident Building, Philadelphia.
Telephone 293 Nov. 20th 1897.

MR. E. G. LANGHORNE, Secy.
St. Louis, Mo.

Dear Sir:—

Please send at once three ink ribbons, to E. F. Roth, Wilkes Barre, Penna and one to the First National Bank Scranton, Pa.

The more I think of the matter the more I trust our Directors will reconsider their decision to sell the narrow machine at $275.00. It seems to me that $250.00 will be a

Defendant's Exhibit "H. B. Wyeth Correspondence," stipulated in from Burroughs case.

price so much better in every way. And I should also not be disappointed if they made same to print 7 columns as well as add this number. The near approach of the broad frame and the undoubted fact that it will entirely stop the sale of the present machine so far as we can judge now, puts an entirely different light on the subject of a narrow machine, and I am more and more convinced that a seven column machine at $250.00 would be our strongest card. I very much hope that you will use your influence to induce them to reconsider the question and decide same along these lines. I should be interested to know what opinions you receive from the other Agents.

Sincerely,

H. B. WYETH.

Nov. 22, 1897.

H. B. WYETH, ESQ.,
Philadelphia, Pa.

Dear Sir:—

As requested in your favor of the 20th we are mailing three ink ribbons to E. F. Roth, Wilkesbarre, Pa. and one to First Nat. Bank, Scranton, Pa., for which we enclose herewith bill.

We note your further remarks in regard to the price of the Narrow Machine, and the writer believes that the directors can be prevailed upon to make the price $250.00 which seems to be the popular price and the one wanted by all of the agents.

Your views in regard to the broad printing frame Machine taking the place of our present standard Machine are on the line with ours. We feel that when this device is put on the market we will discontinue making the present style printing frame, as the broad will embody all that this does and more. We shall advise you as soon as we know the final decision about the price of this Ma-

chine. We may start the Narrow Machine with 6 rows of keys and a listing capacity of 7, but later on if we see that it is necessary to put the 7th row of keys on we can do it without much trouble or cost.

Defendant's Exhibit "H. B. Wyeth Correspondence," stipulated in from Burroughs case.

Yours very truly,
AMERICAN ARITHMOMETER CO.
(Signed) E. G. LANGHORNE, (J)
Secretary.

Long Distance
Telephone 293 Pennsylvania Office

AMERICAN ARITHMOMETER CO.
of St. Louis,
—Manufacturers of the—
BURROUGHS REGISTERING ACCOUNTANT.
905 Provident Building,

H. B. Wyeth,
Sales Agent.

PHILADELPHIA,
Dec. 27th 1897.

MR. E. G. LANGHORNE, Secy.
#2102 Wash Street.
St. Louis, Mo.

Dear Sir:—

The long lost letter of Nov. 24th, has just come to hand and I inclose same for your information.

We have discussed once or twice, I think, without coming to any very satisfactory conclusion, the best method of handling inquiries from my territory that are directed to the St. Louis office. If agreeable to you I should prefer in future that these inquiries be handled as follows,— Upon receipt of a letter asking for catalogue you to mail such catalogue and at the same time write the party that his letter has been referred to me and that he will hear from me more at length at once, you then sending such letter to me with the indorsement thereon that you have sent catalogue and written as I suggest. It will be un-

Defendant's Exhibit "H. B. Wyeth Correspondence," stipulated in from Burroughs case.

necessary for me to go into my reasons for making this request at this time, for I can do so far more satisfactorily when I see you personally, but I shall be very glad if you will handle these letters in the future in this way.

Please send to the Citizens Savings Bank, Detroit, Michigan one copying ribbon (Blue).

I want at once three hundred of the strips that are pasted in the back of our circular, with a cut of the keyboard printed on the back of them. As you have the electrotypes there you can have the work done more cheaply than I could here, and it will be an accommodation if you will attend to the matter for me and have the strips sent at once to Mr. Bates, Station 1, Cincinnati, Ohio.

Referring to yours of 23rd in regard to the Boggs & Buhl Machine if you think it advisable to write them along the lines you suggest I should prefer you doing so yourself, though inasmuch as the complaint was made me informally by Mr. Clowson and not by them I should suggest your waiting until there is further complaint from the Machine. You can probably explain to them more satisfactorily than I could so your reason for returning to them a machine with parts that would need replacing in less than two months after such machine had been supposed to be thoroughly overhauled. I return you herewith the list of parts sent me.

Machine No. 816 has just been delivered. I note your information in regard to the Universal Adding Machine Co., and am glad to learn these facts, but if you have been able to see their model machine I should be extremely glad if you will furnish me with the facts in regard to same. What are its strong points, and what are its weak ones? Has he a successful sliding carriage as he claims, &c., &., Can he print upon a pass book as he claims?

Sincerely,

H. B. WYETH.

Dec. 29, 1897.

Defendant's Exhibit "H. B. Wyeth Correspondence," stipulated in from Burroughs case.

MR. H. B. WYETH,
Philadelphia, Pa.

Dear Sir:—

As requested in your telegram of the 28th we are shipping this day by Pacific Express, prepaid, Machine No. 1936 to the Bank of Bramwell, Bramwell, W. Va. We note you say in your telegram "purple ribbon," this is the only color we carry in stock, and as the ribbon for our Machines are a special width, we are not able to get them in different colors as some of the banks seem to want them. That is, the call for blue ribbons is so light that we have never seen the necessity of carrying in stock a lot of ribbons of various colors, so we are unable to fill your order for "1 blue ribbon for the Citizens Savings Bank of Detroit, Mich." Have entered same on our order book and will forward *purple ribbon* in place of the blue if you so direct.

We presume you have arranged at the Bank of Bramwell for someone to open up and explain the Machine, so we are only notifying them of shipment of same.

We are in receipt of your letter of the 27th enclosing the lost letter of Nov. 24th which we have carefully read and made proper entries for location slip enclosed therein.

We are glad you wrote as you did in regard to the handling of inquiries which come to this office from your territory, which we shall try to follow out in the future as per your wishes. We hope now that we have placed the matter so fully before you in our letter of yesterday, there will be no further grounds for misunderstanding on this point. You can rest assured that whenever we do take up these matters direct we do it considering it to the best interests of all concerned, and not with a view to ignoring you or your agents in the matter at all.

Defendant's Exhibit "H. B. Wyeth Correspondence," stipulated in from Burroughs case.

We hope very much that our action in the Grand Rapids matter will not be of detriment to your interests, but on the other hand will result in the sale of from three to five Machines as per their first inquiry.

You ask for 300 strips same as those pasted in the back of our circulars, with cut of keyboard printed on the back of them. We presume you mean cut of the Machine the same as on our letter heads, and will go to work to get these up for you as early as possible, shipping them as you instruct to Mr. Bates.

In regard to Machine from Boggs & Buhl we will act as you suggest regarding explanation as to what we have done to their Machine. We did not mean to infer that there were parts left in the Machine that would absolutely wear out in two months, because they may run for 6 or 12 months longer, but we wanted them to understand that we did not give the Machine a thorough overhauling or remodeling; which they would naturally know from the amount of our bill. We believe, however, it would be best not to mention this to them until further trouble occurs with the Machine.

We are glad Machine No. 816 has reached you and hope it will open up in good shape.

Should you be able to get any further information regarding the Universal Adding Machine Co. we will forward it to you promptly. They are trying to use the Machine for writing pass books by folding the book backward putting in the leaf on which they wish to write and then have the Machine pass the book along the same as a typewriter does a sheet of paper, but our Mr. Van Beek, who worked on this Machine for Hyett, tells us that they have never succeeded in getting it to work for as long as two strokes; so this is all a farce. The Machine is very much slower than ours, as you have to pull the lever forward to register an amount and push it back to re-

store the keys. The keys are put down and remain down just as ours do. They claim, so we understand from Mr. Van Beek, to be able to put three columns of figures to a sheet; right here we will knock them out with our Broad frame as we can put six to a sheet, and have a manufactured device for handling this sort of work, while they have nothing of the kind. We say positively they cannot write a pass book as they claim.

Defendant's Exhibit "H. B. Wyeth Correspondence," stipulated in from Burroughs case.

With nothing more of importance for today, and best wishes,

Yours very truly,
AMERICAN ARITHMOMETER CO.
E. G. LANGHORNE,
Secretary.

(Enclosure)

Long Distance
Telephone 293. Pennsylvania Office
AMERICAN ARITHMOMETER CO.
of St. Louis.
—Manufacturers of the—
BURROUGHS REGISTERING ACCOUNTANT,
905 Provident Building.
H. B. Wyeth
Sales Agent.

PHILADELPHIA.
Jany. 18th 1898.

MR. E. G. LANGHORNE, Secy.,
St. Louis, Mo.

Dear Sir:—

I have spent the day in Reading, and find the Hiett machine is again delaying everything for me there. I found also a bank, the Penn. National, that is in the market for a machine provided they can get one that will print two columns to a sheet and will do carbon work. After considerable attempt to persuade them that our present machine would do their work, and with some hesitation I finally told them that we expected to put out such a ma-

Defendant's Exhibit "H. B. Wyeth Correspondence," stipulated in from Burroughs case.

chine. The up shot of the matter was that I was to write you for samples of the work of this machine, and for information as to when you could furnish one of them, its price, and what kind of an arrangement could be made in the meantime. Will you please give me this information, and also state fully to me your position as to mentioning the broad frame and as to promising it in cases where absolutely necessary in order to make a sale or meet competition.

Sincerely,

H. B. WYETH .

Jan 20/1898.

MR. H. B. WYETH,
905 Provident Building,
Philadelphia, Pennsylvania.

Dear Sir:—

We have yours of the 18th and regret to know you are being delayed by the "Hiett" circulars. We wrote you about the progress these people were making, but since that time have made further investigation, and we can truthfully state they have not as yet perfected a *model* Machine; consequently have not commenced to construct tools, and you can see how unbusinesslike a move to build tools would be before they knew what kind of tools would be needed.

You can safely count on two years before the Hiett Machine is ready for the market, and then unless the construction is very radically changed, it will not be a success.

We enclose herewith sample of work from our sliding carriage Machine that you may show it to the Penn. National Bank, who are in the market for a Machine which will print two or more columns. We are not ready to put this device on the market, as we are now only building tools for the construction of same, but if the Penn. Na-

tional will buy one of our present Machines, we will, when we are ready to manufacture the sliding device, put same on their Machine at no extra cost to them; we give you this privilege as a last resort, and if you can possibly close sale of the Machine without making this concession, please do so. We will probably be ready to manufacture the sliding carriage during March of this year, and can then put it on the Machine for them, but we think, as they can't get a Machine anywhere else that will do this kind of work, you might press them to take the present Machine. We think you had better not mention the Broad frame at all until we are ready to bring it out, as such a course will result in delay of closing sale of our present machine. Hoping soon to hear you have been victorious with the bank in question.

Defendant's Exhibit "H. B. Wyeth Correspondence," stipulated in from Burroughs case.

Yours very truly,

AMERICAN ARITHMOMETER CO.

(Signed) E. G. LANGHORNE,

Secretary.

Pennsylvania Office of
AMERICAN ARITHMOMETER CO.
of St. Louis,
Manufacturers of
BURROUGHS REGISTERING ACCOUNTANT.

H. B. Wyeth, Sales Agent.
Room 905 Provident Building.

PHILADELPHIA, Jan. 22nd, 1898.

MR. E. G. LANGHORNE, Sec'y.
St. Louis, Mo.

Dear Sir:—

I enclose check paying #1826 sold Jan. 22 to First Nat'l Bank, Emlenton, Pa.

Thank you for the list of Penna. trials. It is just what I wanted.

Defendant's Exhibit "H. B. Wyeth Correspondence," stipulated in from Burroughs case.

On July 26th last or about that date you sent bill for ribbons to C. R. Bishop, Petersburg, Va. I have sent bills, statements, and letters to him, but can get absolutely no reply. Can you give me any information on the subject, or have you any way of collecting the account for me?

Yours of the 17th regarding Hiett machine will, I hope, help me very much in closing some of these "investigators." Certainly the Hiett Co., must have had some very encouraging replies to their circulars.

Will you please state what machines the inclosed bill refers to. I presume it is all right, but I want to know whether the amount is chargeable to my Pbg agent or not.

Please send me here a supply of narrow guides, say 1 dozen. I am entirely out.

The machine from Harrisburg Nat'l Bank they report as adding *both short and over* in the hundred dollar column, but more generally *short*. Will you please explain to me how a machine can add short? They also state it occasionally skipped a figure for instance would print $273.00 as $2 3.00.

Shall advise you if I cannot correct the trouble with the Pottsville machine—#1639. Thank you for the prompt shipment of machine there.

I note carefully what you say about the sliding carriage, and it is emphatically my policy not to mention same to anyone, nor have I ever done so heretofore to a prospective customer. But in this case, the Penn. Nat'l. would absolutely not consider our present machine, but were bent upon going into the Hiett machine and the Comptograph thoroughly, since both claim to be able to write two columns on a slip, and I *think* that by mentioning our plan to the cashier confidentially I managed

to stave off these other investigations, and I really *hope* to close a deal along the line you outline.

Defendant's Exhibit "H. B. Wyeth Correspondence," stipulated in from Burroughs case.

Sincerely

Jan. 24 1898 H. B. WYETH.

Long Distance
Telephone 293 Pennsylvania Office

AMERICAN ARITHMOMETER CO.
of St. Louis,
—Manufacturers of the—
BURROUGHS REGISTERING ACCOUNTANT.
905 Provident Building,

H. B. Wyeth
Sales Agent PHILADELPHIA,
Jany. 25th 1898.

MR. E. G. LANGHORNE, Secy.,
St. Louis, Mo.

Dear Sir:—

I have wired you today asking that you express here at once one of our latest machines for a positive sale. This is for the Market Street National Bank, which is going to put in a second machine, but are going to investigate the Comptograph and the Hiett. They allow one of ours in and buy it with the understanding that if they like the others better they can back out. I sincerely trust you can ship.

With regard to the sliding carriage that I wrote you for information to furnish the Penn. National of Reading, you said nothing as to the manifold work to be done with that machine. Will it do perfect manifolding, and if so is the secret of the manifolding in the attachment which is to be placed instead of the present carriage part. If this is not so how can you attach the sliding carriage improvement to the present machine and still have it do manifolding. The idea is with the Penn. National that they want their machine to do all that the new ma-

Defendant's Exhibit "H. B. Wyeth Correspondence," stipulated in from Burroughs case.

chine will do. They offer to do one of two things, to buy the machine they are using now which is a new one, if we will promise positively that when the sliding carriage device is attached it will be capable of doing exactly the same work and be as good in every respect as a new machine with the sliding carriage which you would sell them when same is put upon the market, or they will agree to buy one of the new machines as soon as it is ready for the market provided it does what you claim for it, that is to say several columns to a sheet and manifolding, and provided further that we will furnish them a machine to use until such time, this machine to be a second hand one if we desire. I have told them that I should write you for information on these points and advise them as soon as I heard. Please inform me fully upon them at once.

Sincerely,

H. B. WYETH.

1/98

Long Distance

Telephone 293. Pennsylvania Office

AMERICAN ARITHMOMETER CO.

of St. Louis.

—Manufacturers of the—

BURROUGHS REGISTERING ACCOUNTANT

905 Provident Building.

H. B. Wyeth PHILADELPHIA

Sales Agent. June 13th 1898.

MR. E. G. LANGHORNE, Secy.,

St. Louis, Mo.

Dear Sir:—

The cranky notions that some of these Philadelphia Banks can conjure up is a revelation. I have been trying for four years to make sale to the Centennial National Bank here, and have just succeeded in doing so,

Defendant's Exhibit "H. B. Wyeth Correspondence," stipulated in from Burroughs case.

but matters have apparently been delayed by them on every sort of a pretext. I finally offered them the sliding carriage device as per the inclosed letter, and they have now stated that they will purchase and pay for the Machine if I will give them this letter signed by the A. A. Co., my signature as agent not being satisfactory to them. Will you kindly put your rubber stamp and signature as secretary to this document and return same to me at once and I think then I shall be able to corner their check.

The Farmers Deposit National Bank write as per the inclosed copy. I have replied stating that I have ordered Bair & Gazzam to send their Machine and let them use their reserve, and have so written B. & G. Will you please handle the case from now out.

I note contents yours of 11th and thank you for copies of correspondence enclosed.

Sincerely,

H. B. WYETH.

Long Distance
Telephone 293 Pennsylvania Office

AMERICAN ARITHMOMETER CO.
of St. Louis.
—manufacturers of—
BURROUGHS REGISTERING ACCOUNTANT,
905 Provident Building,

H. B. Wyeth,
Sales Agent. PHILADELPHIA, July 22, 1898.

MR. E. G. LANGHORNE, Sec.,
St. Louis, Mo.

Dear Sir:

Since writing my other letter to you, yours of the 20th has been received. Thank you for the two cuts of Machines, which I presume will be received today. Your explanation in regard to the recent misunderstanding on

Defendant's Exhibit "H. B. Wyeth Correspondence," stipulated in from Burroughs case.

my machine order is entirely satisfactory, and I can readily see how it occnrred. I should be glad to have you ship me here at least six of the broad frame machines as soon as they are ready. If you can spare ten, I should be glad to have that many. If you will ship them to me here I will attend to their distribution from this office. Though on second thought, I wish to ask you to ship one broad frame to the Clinton National Bank, Columbus, Ohio, and one to me at Wilmington, Del., and the balance of what you can give me, to this office.

You will perhaps remember that I have in my territory two banks with whom I agreed that we should attach the broad frame to their machines as soon as same was ready. This was the Penn. National Bank, Reading, Pa., and the Centennial National Bank, Philadelphia.

Will you please advise me what shape you will be in from now on to furnish these new machines? Will you have a snpply of them or will we have difficulty in obtaining them? From what you say you intended to go on making the standard machines. I think I have enough of these to last me for some time, as I shall be surprised if the broad frame does not entirely supersede the present standard machine. The information asked for will greatly oblige.

Sincerely yours,

H. B. WYETH.

P. S.

Am anxious to hear how Mr. E. G. L. is progressing, and hope the reports are much more favorable.

RECEIVED

Jul 25, 1898.

Defendant's Exhibit "H. B. Wyeth Correspondence," stipulated in from Burroughs case.

Long Distance
Telephone 293. Pennsylvania Office

AMERICAN ARITHMOMETER CO.
of St. Louis,
—Manufacturers of the—
BURROUGHS REGISTERING ACCOUNTANT
905 Provident Building.

H. B. Wyeth,
Sales Agent. PHILADELPHIA, July 28, 1898.

MR. E. G. LANGHORNE, Sec.,
St. Louis, Mo.

Dear Sir:—

I have yours of the 26th, and have also received the broad frame machines. Have just unpacked one and it seems to be all right. Will you please advise me with regard to the wide paper for this machine? Do you furnish same in rolls or not, and if so, name prices, etc.

I also have your message with regard to the machine in the Central National Bank, and am glad that you are helping me out of the difficulty. Am also in receipt of certificate of stock properly made out.

Sincerely yours,

H. B. WYETH.

Received.
Jul. 30 1898.

PATENTED FILE OF DORR E. FELT, NO. 568,021.

Defendant's Exhibit Abstract of File—Wrapper of Felt Patent 568,021.

Claim 15 as originally filed read as follows:

"15. The combination with the segment levers and the vibrating frame, of the keys adapted to engage the levers, spring latches adapted to attach the stems of the keys to the frame, and a horizontally movable frame adapted to release the latches, substantially as specified."

The following appears in official letter of Feb. 24, 1896:

"Likewise claims 15 and 16 are held to cover substantially the same subject-matter and one of them should be erased."

The amendment of April 27, 1896, canceled all of the claims and among others inserts the following:

"15. The combination with the segment levers and the vibrating frame, of the keys engaging the levers, spring latches for attaching the stems of the keys to the frame, and a horizontally movable frame for releasing the latches, substantially as specified."

In official letter of May 27, 1896, the following appeared:

"The word *for* should be inserted after "keys," line 2, of claims 11, 12, 14 and 15, and after 'latches,' line 2, of claim 12."

The amendment of June 18, 1896, contained the following:

"In each of claims 11, 12, 14 and 15 insert 'for' after 'keys' in line 2, which makes claim read as follows:

"15. The combination with the segment levers and the vibrating frame, of the keys for engaging the levers, spring latches for attaching the stems of the keys to the frame, and a horizontally movable frame for releasing the latches, substantially as specified."

In this condition the claim was allowed.

Claim 35 was originally claim 42 and read as follows:

"42. The combination with the type heads, hammers and pawls controlling the hammers, of hammer tripping levers an actuating device for said levers, of a hand lever for causing the printing of the sums or numbers to be added, a hand device for causing the printing of the answers, both said hand lever and said hand device being mechanically connected to the type heads,

Defendant's Exhibit Abstract of File —Wrapper of Felt Patent 568,021.

the tripping lever and said actuating devices, substantially as specified."

This claim was not rejected but by amendment of April 27, 1896, all the claims were canceled and a new set substituted in which there appeared as a substitute for said claim 42 the following:

"36. The combination with the type and hammer controlling devices, of the printing mechanism, of a hand lever such as C^{15} for causing the printing of the sums or numbers to be added and a hand device such as K for causing the printing of the answers, both said hand lever and said hand device being mechanically connected to the type and the hammer controlling devices of the printing mechanism, substantially as specified."

Referring to said claims the following appears in official letter of May 27, 1896:

"The words 'such as' should be canceled from lines 2 and 4 of claim 36. The applicant is entitled to any obvious mechanical equivalents of the parts he includes in his claim, and his rights are safe without any qualifying expression implying such equivalents. If he attempts to cover more than would be allowed him, such expression is improper."

The amendment of June 18, 1896, includes the following:

"In claim 36 erase 'such as' from lines 2 and 4" which made the claim read as follows:

"36. The combination with the type and hammer controlling devices of the printing mechanism of a hand lever C^{15} for causing the printing of the sums or numbers to be added, and a hand device K for causing the printing of the answers, both said hand lever and said hand device being mechanically connected to the type and the hammer controlling devices of the printing mechanism, substantially as specified."

Amendment of Aug. 6, 1896, cancels claims 22 and 43. As a consequence claim 36 is renumbered claim 35 and as such was allowed.

Original claims 53 to 59 related to the carrying mechanism and read as follows:

"53. The combination with the numeral wheels, the segment levers actuating the wheels, and the carrying devices,

Defendant's Exhibit Abstract of File—Wrapper of Felt Patent 568,021.

of devices for exerting friction on the wheels, and means for controlling said friction devices and whereby they are allowed to act during the time the wheels are moved by the levers, and are not allowed to act during the carrying operations, substantially as specified."

54. The combination with the numeral wheels, the segment levers and the main cam, of the friction levers, the shaft N for controlling the levers, the movable cam piece N^6 upon the main cam and the connecting mechanism between the cam and the shaft, substantially as specified.

55. The combination with the shaft N, of the main cam, the movable cam piece N^6 mounted on the main cam and having the nearly vertical surface N^7, and means for supporting the cam piece while it is acting, substantially as specified.

56. The combination with the carrying levers and their latches of the shaft N and its pins for moving said levers, and means for rocking said shaft, substantially as specified.

57. The combination with the carrying levers and their latches, of devices for moving the levers back into position for carrying, such devices being also adapted to retreat partially immediately after thus moving the levers to allow levers released from the latches to escape re-engagement therewith, substantially as specified.

58. The combination with the carrying levers and their latches, of devices for moving the levers back into position for carrying, such devices being also adapted to retreat partially immediately after thus moving the levers to allow the levers released from the latches to escape re-engagement therewith, and a cam device for controlling the movement of said devices for moving the levers, substantially as specified.

59. The combination with the carrying levers and their latches, of the rock shaft N and its pins, and a cam adapted to rock said shaft in moving the carrying levers back and also adapted to allow it to rock back partially to give opportunity to the levers which may be released from their latches, to move far enough to escape re-engagement, substantially as specified.

These claims were not rejected but in re-writing the case by amendment of April 27, 1896, they were with all the other

Defendant's Exhibit Abstract of File—Wrapper of Felt Patent 568,021.

claims canceled and the following, relating to the carrying mechanism were inserted:

48. The combination with the carrying levers and their latches of the shaft N and its pins for moving said levers, and means for rocking said shaft, substantially as specified.

49. The combination with the carrying levers and their latches, of devices for moving the levers into position for carrying, such devices being also retracted partially immediately after thus moving the levers to allow the levers released from the latches to escape re-engagement therewith, substantially as specified.

50. The combination with the carrying levers and their latches, of devices for moving the levers into position for carrying, such devices being also retracted partially immediately after thus moving the levers to allow the levers released from the latches to escape re-engagement therewith, and a cam device for controlling the movement of said devices for moving the levers, substantially as specified.

51. The combination with the carrying levers and their latches, of the rock shaft N and its pins, and a cam for rocking said shaft in moving the carrying levers, and also acting to allow it to rock back partially to give opportunity to the levers which may be released from their latches to move far enough to escape re-engagement, substantially as specified.

58. In a calculating machine, the combination of the numeral wheels, the carrying levers, a rock shaft controlling said levers, and a hand device or lever whereby said shaft is rocked, substantially as specified."

On account of the cancellation of other claims by later amendment the numbers of these claims were changed as follows:

48 to 46, 49 to 47, 50 to 48, 51 to 49, 58 to 54 and afterwards to 52.

The renumbered claims 46, 47, 48, 49 and 52 were then allowed without change.

2–390.

UNITED STATES OF AMERICA,

DEPARTMENT OF THE INTERIOR,

UNITED STATES PATENT OFFICE.

To all to whom these presents shall come, Greeting:

THIS IS TO CERTIFY that the annexed is a true copy from the Records of this Office of the File Wrapper and Contents, omitting Paper Number 1, in the matter of the

Letters Patent of

Dorr E. Felt,

Number 628,176, Granted July 4, 1899,

for

Improvement in Tabulating-Machines.

IN TESTIMONY WHEREOF I have hereunto set my hand and caused the seal of the Patent Office to be affixed at the City of Washington, this 13th. day of Septem-

SEAL ber, in the year of our Lord one thousand nine hundred and eleven and of the Independence of the United States of America the one hundred and thirty-sixth.

F. A. TENNANT,

6—1625 Assistant Commissioner of Patents.

1898

Div.

(Serial Number,) (Ex'r's Book,)

682,119

Patent No. 628,176

Dorr. E. Felt

Of Chicago

County of

State of Illinois

Invention Tabulating-Machine

Parts of Application filed.
(Petition , 190 .
(
(Affidavit
(
(Specification
(
(Drawing
(
(Model or Specimen
(
(First fee Cash
(
(" " Cert.

Appl. filed complete

OLD WRAPPER
WITH RECORD OF ACTIONS
INSIDE.

Examined

Countersigned:

For Commissioner.

Notice of allowance , 190 .

Final fee Cash , 190 .

" " Cert. , 190 .

Patented , 190 .

Mutilated

..... Number,) Ex'r's Book

682,119 1898.

..... Div. 23 1

Patent No. 628,176. 5

Dorr E. Felt

Of Chicago

County of

State of Illinois

Invention

Parts of application filed.

Tabulating Machines

Petition May 31, 1898.

Affidavit " " "

Specification " " "

Drawing 6 shts. " " "

Model not required

Specimen

First fee / Cash $15, May 31, 1898

" " Cert.

App. filed complete May 31 98

Examined June 7, 1899. J. T. Newton Ex

Countersigned: J W Babson

For Commissioner.

6—8—99

Notice of allowance June 8, 1899.

Final fee Cash $20 June 14, 1899.

2 " " Cert. 189 .

Patented July 4, 1899.

Munday, Evarts & Adcock

906 Marquette Build.

3 Chicago, Ill.

AMOUNT RECEIVED

$ 15 ———

Chief Clerk.

Cr

PETITION.

TO THE COMMISSIONER OF PATENTS:

YOUR PETITIONER, Dorr E. Felt a citizen of the United States, residing at Chicago in the County of Cook and State of Illinois prays that Letters Patent be granted to him for the Improvement in

Tabulating Machines

set forth in the annexed specification; and he hereby appoints John W. Munday, Edward S. Evarts and Edmund Adcock, composing the firm of MUNDAY, EVARTS & ADCOCK, (Register No. 1248) of No. 906 Marquette Building, Chicago, Illinois, his attorneys with full power of substitution and revocation, to prosecute this application, to make alterations and amendments therein, to receive the patent, and to transact all business in the Patent Office connected therewith.

Dorr E. Felt.

SPECIFICATION

To All whom it May Concern:

Be it known, that I, Dorr E. Felt a citizen of the United States, residing in Chicago in the County of Cook and State of Illinois have invented a new and useful Improvement in Tabulating Machines of which the following is a specification:

This invention relates to the construction of calculating machines adapted to both add numbers and to print or tabulate the numbers as they are added, together with the sums of the numbers. My endeavor therein has been to adapt such machines to use with paper in sheet or short length form as distinguished from roll or continuous length paper; also to permit the printing upon the paper of a plurality of columns or vertical rows of numbers, by providing it with a laterally shifting paper carriage and with mechanism adapted also to feed the paper vertically at each printing operation; also to provide the machine with means whereby the operator may be warned when the bottom of the sheet has been reached, to the end that he may either put in a fresh sheet or shift the one already in so as to start a fresh column of numbers thereon; also to provide means which, when the operator shifts the paper, will also roll the paper back so as to present the top of the sheet at the printing center and thus enable the making of each new column of numbers of the full length permitted by the sheet.

These and other features of the invention will be fully understood from the detailed description given below, when considered in connection with the accompanying drawings forming a part thereof, ~~and~~ in which ~~drawings~~

Fig. 1 is a partial side elevation of a calculating machine embodying my invention, and showing the part thereof to which the invention more especially relates. Fig. 2 is a longitudinal vertical section of the parts shown in Fig. 1. Fig. 3 is a partial elevation of the machine showing the side opposite to that given in Fig. 1. Fig. 4 is a rear elevation. Fig. 5 is a detail vertical cross section showing the paper carriage and rolls. Figs. 6, 7 and 8 are sections on the lines 6–6, 7–7, and 8–8 respectively of Fig. 4. Fig. 9 is a section on the

line 9–9 of Fig. 7, and Fig. 10 is a side elevation of the ratchet wheel shown in section in Fig. 9, looking in the direction of the arrow at line 10–10 of Fig. 9.

The machine embodies the usual numeral wheels, and their operating devices, such for instance as those shown in patent No. 568,021, granted to me September 22, 1896. The wheels are not shown in the drawing, but the setting keys are indicated at 2, 2, the segment levers for rotating the wheels at 3, the vibrating frame whereby the keys are attached to and enabled to regulate the operation of said levers at 4, the crank supporting said frame at 5, the spring for lifting the vibrating frame at 6, the main cam at 7 wherefrom most of the operating parts of the machine derive power and the pivot upon which such cam oscillates at 8. I have also shown at 9 an elbow lever, at 10 a catch lever, and at 12 a connecting rod forming part of mechanism for interlocking the total printing mechanism and the main cam; so that neither can operate pending an operation by the other; also at 13 a spring lever for returning the cam to its normal position, at 14 and 15 the ink ribbon feeding ratchet and pawl, at 17 the double acting pawl for preventing partial strokes by the main cam, at 18 the ink ribbon spools, at 19 the alarm for notifying the operator that the ribbon should be reversed, at 20 the type segments joined to the segment levers by connecting rods 21, at 22 the hammers for causing the impressions, at 23 the pawls for controlling the hammers, at 24 the levers for releasing said pawls 23, at 25 the levers connecting said levers 24 with the segment levers, at 26 the swinging frame corresponding to frame H^9 of my said patent, at 27 and 28 the slotted lever and crank for operating said frame 26, at 29 and 30 the slotted levers and cranks for operating the shafts 31 carrying the arms 32 connected by a cross bar 33 serving to lift the hammers after each

operation, said shaft 31 also carrying an arm 34 for depressing the shield 35 whereby the paper is moved close to the type preparatory to printing. The totalizing lever is shown at 36, its shaft at 37, and retracting spring at 38, and the lever for lifting the housing 39 appears at 40.

All the parts above enumerated are either in my patent, or in my pending application No. 679,461, filed May 2, 1898, and except in so far as they co-operate with the novel mechanisms and devices of my present invention, or have been modified to adapt them to be used therewith, they form no necessary part of this application.

The machine is provided with a paper carriage, adapted to be moved laterally whenever it is desired to start the printing of a fresh vertical column or row of numbers. This carriage may be made much like the paper carriage of typewriters, but in the construction preferred by me, it consists of two longitudinal bars A A^1, connected at their ends by heads A^2 A^3, A^4 and A^5 and movably supported in stationary uprights A^6. In this carriage are three rolls B, B^1 and B^2 for operating the paper, two of which are driven and the other moves by friction. The paper is entered between the rolls B and B^1, and is carried around the center roll B and thence up between rolls B and B^2 to the point of delivery.

The rolls B and B^1 are actuated in the line spacing operations as follows: Attached to the lever 29 is a pawl C, the pivot C^1 uniting which to the lever passes through the slot C^2 in the adjacent upright A^6. When lever 29 is actuated by the main cam, this pawl carries the ratchet wheel C^3 through one tooth space, and thereby gives motion to its carrying shaft C^4, which extends from end to end of the paper carriage and may be supported in the heads thereof. The ratchet wheel is stationary

as to location and has a spline engagement with the shaft so that it operates the latter in whatever position it may be, as will be understood from Fig. 9. The shaft also carries a gear C^5 which meshes with an idler C^6, and this idler actuates a gear C^7 upon the end of the shaft B^3 of paper roll B^1. Shaft B^3 carries also a second gear C^9 which meshes with a gear C^{10} upon the shaft B^4 of paper roll B. This construction automatically imparts at each actuation of the main cam such an amount of rotation to the paper rolls B and B^1 as is necessary to move the paper vertically the extent of one line space, but it does not interfere with the operation of the paper rolls at will in either direction desired, inasmuch as the pawl C is self releasing, its under surface C^a being adapted to co-operate with the following tooth of the ratchet in effecting such release at the end of each actuation of the wheel. The carriage may be made of any width desired, and no change in any of the parts above described will then be needed beyond the mere lengthening of the paper rolls and the ratchet wheel shaft C^4.

The alarm or bell which indicates that the bottom of the sheet has been reached is shown at D in Figs. 1, 4, 5 and 6, and is supported by means of an arm D^1 projecting from a rock shaft D^2 passing through the heads at one end of the paper carriage, and supported at its inner end in a bracket D^3. At the inner end the shaft D^2 carries another arm D^4, which is placed opposite and adapted to enter a groove B^5 in the center paper roll B. The paper upon which the tabulating is being done is adapted to keep the arm D^4 out of the groove so long as it covers the groove, but when the bottom of the sheet is reached so that the groove is uncovered, the arm is impelled to enter the same by the spring D^5 attached to arm D^1 seen at Fig. 6. This rocks the shaft D^2 slightly, and moves the bell from the position

given at Fig 6 into the field of action of the hammer D^6 which is attached to a vibrating arm D^7 pivoted at D^8, pressed upon by the spring D^9 and lifted at each actuation of the ratchet wheel shaft by the pivoted dog D^{10} actuated by the toothed wheel D^{11} upon said shaft. The bell is thus normally out of reach of the hammer, so that although the latter is moved at each paper feeding operation, the bell does not get within its reach until the lower edge of the paper uncovers the groove in the paper roll.

For shifting the paper carriage laterally after the completion of a column in order to bring a fresh portion of the paper in front of the printing center and in readiness for the printing of another column, I employ the following devices: A hand lever E, shown at Fig. 1, mounted upon one end of the rock shaft E^1, is actuated by moving it over toward the keys in said figure. At its other end said shaft carries the crank or arm E^2 which is connected by a rod E^3 to an elbow lever E^4 stationarily pivoted at E^5 and carrying a pawl E^6. A stationary bracket E^7 projecting from one of the uprights A^6 is provided with a stop E^8 against which the pawl is pressed when the parts are in their normal position as in Fig. 5, and this stop acts to keep the further end of the pawl from entering the notches E^9 of which a series are cut in one edge of one of the longitudinal members of the paper carriage frame. The spring E^{10} tends to force the pawl into the notches, and will carry it into one of them as soon as the lever E is actuated, because such actuation results in moving the pawl away from stop E^8. When this engagement takes place, the lever E^4 will carry the paper carriage to the right and until the upright to which bracket E^7 is attached is reached by the pawl and acts as a stop to further movement. The operator now releases the hand lever, and the retracting spring E^{11} will return the carriage actuating parts by which the shifting has

been accomplished to their starting positions shown at Figs. 1, 3 and 5. In the intervals between these shifting operations, the carriage may be moved freely in either lateral direction by hand, as the pawl E^6 is normally out of engagement.

At the same time the paper carriage is thus shifted, the paper is also moved back so as to bring its top to the printing center, and this operation is rendered wholly automatic by the employment of means such as the following: Loosely mounted upon the shaft C^4 and adjacent to the ratchet wheel C^3 is a gear F, having its hub elongated at one side as at F^1, such hub carrying a removable collar F^2 at its further end, The gear F is compelled to rotate with the ratchet·· wheel by means of the pins F^3 secured in the disk F^4 and extending through the gear and into the side face of the ratchet·· wheel, the ratchet being recessed to receive such pins as will be understood from Figs. 9 and 10. Gear F meshes with the gear F^5 carrying a barrel F^6 and supported upon a short stationary shaft F^7, one end of which may be given a bearing in the upright A^6 and the other end be supported in the bracket F^8 attached at its ends to the upright. Within said barrel is a spring F^9 which is wound up by the rotation of gear F^5, and the power thus stored is preserved by the pawl F^{10} engaging the ratchet teeth F^{11} on the edge of the barrel, such pawl having a spring F^{12} for keeping it in engagement. The pawl F^{10} is connected by a rod F^{13} with lever E^4, and when said lever is operated the pawl is withdrawn from the barrel as will be understood from Figs. 4 and 8. This leaves the spring F^9 free to operate the drum, and through the gears F and F^5 to rotate shaft C^4, and thus to actuate the paper rolls in a direction the reverse of their feeding movements. This operation should be sufficient to carry the paper to its starting position, that is to say with its top at the printing

center. The extent of the rotation thus received from the spring may be limited in any suitable way, as for instance by means of the stop F^{14} supported upon the hinged arm F^{15}, and the spiral groove F^{16} in the side face of gear F^5 into which said stop is entered.

To avoid the winding up of the barrel spring when operating the paper rolls by hand, which is a necessary operation when starting the paper into the bight (bite) of the rolls, and also to avoid all necessity for releasing the pawl F^{10} when it is desired to turn the rolls backward, as is frequently necessary, and also to avoid all danger of the spring F^9 operating when putting in or taking out the paper. I make the disk F^4 movable away from the ratchet wheel so as to break the engagement between the ratchet and gear F, and for this purpose said disk is mounted upon a sleeve F^{17} surrounding the hub F^1 and movable along the same, and provided with a projecting rim F^{18}. The movement just mentioned of the sleeve is caused by the engagement with rim F^{18} of the cam end G of a lever G^1 connected to the hinged paper-guide G^2 by the crank G^3. (see Figs. 2 and 9) The guide G^2 is located in front of the point at which the paper is put into the machine and the operator pulls its upper edge over towards the keys, and thereby brings the cam G into contact with the rim F^{18} and slides the sleeve along the hub sufficiently to draw the pins F^3 out of the ratchet·· wheel. The operator retains the guide in this bent·· over position so long as may be necessary, and while so held the disengagement between the ratchet wheel and gear F will continue, so that he is during that time free to operate the paper·· rolls to any extent desired, and during the same time the rewinding drum will be stationary the pawl remaining in engagement with its teeth F^{11}. The cam G may be let into a stationary bar G^4 so as to be guided thereby as seen at Fig. 2.

9

A dolly roll H upon the end of a spring depressed arm H^1, may be employed in connection with the wheel D^{11} to regulate the step by step feeding movements of the paper rolls and to ensure uniformity in the extent of the different impulses.

While I have described the paper as presenting its top at the printing center when it is moved back by the backward rotation of the feed rolls, it will be understood that I mean by this that the paper is carried back to the point from which it has been fed in the line spacing operations. This point ordinarily will be the top of the sheet, but it may be lower down on the sheet and in fact at any intermediate point thereon, and hence I do not wish the claims upon this feature to be limited to means for returning the paper to what is literally its top, especially in view of the fact that the mechanism shown by me will return the paper either to its top or to a lower plane depending upon the location occupied by the paper at the time the line spacing operations begin.

In order to keep the gear F normally in engagement with the ratchet wheel C^3, a spring J is coiled around the hub F^1 between the collar F^2 and the end F^{18} of the sleeve F^{17}. The bracket F^8 not only supports the shaft F^7, but is preferably made to encircle shaft C^4, thereby stiffening said shaft and also assisting in keeping the gear F and ratchet wheel C^3 in close proximity to each other. It will be obvious to those skilled in the art that many of the features of my invention can be changed without departing from the spirit of the invention, and hence I do not wish to be limited in my claims to the precise construction shown except in cases where the letter of the claims clearly calls for the precise construction.

10

I claim:

1

The combination with the printing mechanism and its actuating devices, of a laterally movable carriage, paper rolls mounted in said carriage, and automatic mechanism for actuating said rolls in feeding the paper in the line spacing movements, substantially as specified.

2

The combination with the printing mechanism and its actuating devices, of a laterally movable carriage, paper rolls mounted in said carriage, and mechanism connected to said actuating devices and serving to operate the paper rolls in feeding the paper in the line spacing movements, substantially as specified.

Sub. A'

3

The combination with mechanism for feeding the paper vertically in line spacing, of an alarm acting to give notice when the bottom of the paper is reached, substantially as specified.

controlled by the paper and

2/13/99

4

The combination with the paper feed mechanism for feeding the paper vertically in line spacing, and means for actuating said mechanism automatically, of an alarm acting to give notice when the bottom of the sheet has been reached, substantially as specified.

5

The combination with the paper feed mechanism and a laterally movable carriage in which the mechanism is supported, of an alarm for giving notice when the bottom of the sheet has been reached, said alarm being mounted upon said carriage, substantially as specified.

11

6

The combination with automatically operating paper feed mechanism and a laterally movable carriage supporting said mechanism, of an alarm for giving notice when the bottom of the sheet is reached, such alarm being mounted upon said carriage, substantially as specified.

7.

The combination with a paper roll employed for feeding the paper in line spacing and provided with a circumferential groove, of a spring actuated arm adapted to enter said groove when the latter is not covered by the paper, and an alarm set in operation upon the entrance of said arm into said groove, substantially as specified.

8

The combination with a paper roll employed in feeding the paper in line spacing, said roll having a circumferential groove, and a movable carriage in which said roll is mounted, of a spr ng actuated arm also mounted upon said carriage and adapted to enter said groove when the latter is not covered by the paper, and an alarm set in operation upon the entrance of said arm into said groove, substantially as specified.

9

The combination with a paper roll employed for feeding the paper in line spacing and provided with a circumferential groove, of a spring actuated arm adapted to enter said groove when the latter is not covered by the paper, and a bell connected to said arm and moved into operative relation to its hammer when said arm enters said groove, substantially as specified.

10

The combination with a paper roll employed for feeding the paper in line spacing and provided with a circumferential groove,

12

of a spring actuated arm adapted to enter said groove when the latter is not covered by the paper, and a bell and hammer which are normally separated but are brought into operative relation when said arm enters said groove, substantially as specified.

11

The combination with a paper roll employed for feeding the paper in line spacing, and provided with a circumferential groove, of a spring actuated arm adapted to enter said groove when the latter is not covered by the paper, a bell being movably supported and controlled by said arm, and a hammer for sounding said bell operated by the roll actuating mechanism, substantially as specified.

12

The combination with a paper roll employed for feeding the paper in line spacing, and provided with a circumferential groove, of a spring actuated arm adapted to enter said groove when the latter is not covered by the paper, a carriage upon which said roll and arm are supported, a bell and hammer also supported on said carriage and moved into operative relation when the arm enters the groove, and mechanism for actuating the hammer, substantially as specified.

13

The combination with a paper roll employed in feeding the paper in line spacing, and provided with a circumferential groove, of mechanism for operating said roll, a spring actuated arm adapted to enter said groove when not covered by the paper, a bell and hammer moved into operative relation when the arm enters the groove, and means whereby the roll actuating mechanism will operate the hammer, substantially as specified.

Subt.
B
2/25/99

4 ~~14~~

The tabulating machine having in combination a movable

13

paper carriage, and mechanism for laterally shifting said carriage at will the width of a column space, substantially as specified.

5 ~~15~~

The tabulating machine wherein are combined a movable paper carriage, and mechanism for laterally shifting said carriage at will, in column spacing, such mechanism embracing a hand lever E, substantially as specified.

6 ~~16~~

3/
/25/
/99

The tabulating machine wherein are combined a movable paper carriage, a hand lever E, operable at will, and mechanism connecting said lever with the carriage and adapted to shift the carriage laterally the width of a column space, substantially as specified.

6 ~~17~~

The combination in a tabulating machine,of a movable paper carriage having notches E^9, a hand lever E operable at will, the shaft E^1, crank E^2 connecting bar E^3, elbow lever E^4, pawl E^6, stop E^7, and spring E^{10}, substantially as specified.

7 ~~18~~

The combination with the notched and movable paper carriage, of a spring actuated pawl normally disengaged from the carriage, and mechanism for moving said carriage laterally and acting to release said pawl so it may engage in the notches upon the carriage, substantially as specified.

8 ~~19~~

The combination in a tabulating machine, of a laterally movable paper carriage, and mechanism for shifting said carriage to form the column spacing, said mechanism being normally disengaged from the carriage, substantially as specified.

14

9 ~~10~~ ~~20~~

The combination in a tabulating machine, of a movable paper carriage which is normally free to be moved by hand, and mechanism for shifting said carriage in forming the column spaces, said mechanism automatically engaging and releasing the carriage, substantially as specified.

10 ~~11~~ ~~21~~

The combination in a tabulating machine of a movable paper carriage normally free to be moved by hand, and mechanism normally disengaged from the carriage but serving when actuated to engage and move the carriage laterally in column spacing, substantially as specified.

11 ~~12~~ ~~22~~

The combination with the laterally movable paper carriage and its paper feeding roll or rolls, of mechanism for shifting the carriage in spacing the columns, and mechanism for returning the paper so as to present the top of the sheet at the printing center, substantially as specified.

12 ~~13~~ ~~23~~

The combination with the laterally movable paper carriage and its paper feeding roll or rolls, of mechanism for shifting the carriage in spacing the columns, and mechanism for imparting a backward rotation to the paper roll or rolls, so as to return the paper and present its top at the printing center, substantially as specified.

13 ~~14~~ ~~24~~

The combination with the laterally movable paper carriage and its paper feeding roll or rolls, of mechanism for shifting the carriage in spacing the columns, and mechanism for returning the paper so as to present the top of the sheet at the printing center, said paper returning mechanism operating simultaneously with said shifting mechanism, substantially as specified.

15

14 ~~13~~ 25

The combination with the laterally movable paper carriage and its paper feeding roll or rolls, of mechanism for shifting the carriage in spacing the column, and mechanism for returning the paper so as to present the top of the sheet at the printing center, said returning mechanism being operated by said shifting mechanism, substantially as specified.

15 ~~14~~ 26

The combination with a laterally movable paper carriage, and the paper feeding rolls supported in said carriage, of a spring for imparting backward rotation to said rolls, and means for putting said spring under tension, substantially as specified.

16 ~~15~~ 27

The combination with the driven paper feed rolls, of a spring mechanically connected to and put under tension by the feeding operations of the rolls, said spring serving when released to impart a backward rotation to the rolls and to carry the paper back to its starting position, substantially as specified.

17 ~~18~~ 28

The combination with the paper feed rolls, and the mechanism for actuating them in the line spacing operations, of a spring mechanically connected to said actuating mechanism and put under tension thereby, a barrel surrounding said spring, a spring actuated pawl engaging teeth carried by the barrel, and means for withdrawing the pawl when it is desired to move the paper back to its starting position, substantially as specified.

18 ~~19~~ 29

The combination of the laterally movable paper carriage, driven paper feed rolls supported in the carriage, mechanism for moving the carriage laterally and mechanism for returning the

16

sheet so as to present its top at the printing center, substantially as specified.

~~30~~ ~~20~~ 19

The calculating machine wherein are combined a laterally movable paper carriage, driven paper feed rolls supported in the carriage, mechanism for moving the carriage laterally, and mechanism for returning the sheet so as to present its top at the printing center, substantially as specified.

~~31~~ ~~21~~ 20

The combination of the laterally movable paper carriage, driven paper feed rolls supported in the carriage, mechanism for moving the carriage laterally, and mechanism for returning the sheet so as to present its top at the printing center, said mechanism for moving the carriage and said mechanism for returning the sheet operating simultaneously, substantially as specified.

~~32~~ ~~22~~ 21

The combination of the laterally movable paper carriage, driven paper feed rolls supported in the carriage, mechanism for moving the carriage laterally, and mechanism for returning the sheet so as to present its top at the printing center, said last mentioned mechanism being set in operation by said mechanism for moving the carriage, substantially as specified.

~~33~~ ~~23~~ 22

The combination with the paper feed rolls and mechanism for returning the paper so as to bring its top to the printing center, of means for disengaging said mechanism from the rolls while inserting the paper, substantially as specified.

~~34~~ ~~24~~ 23

The combination with the paper feed rolls and mechanism for returning the paper so as to bring its top to the printing center, of a movable guide G^2 and connections between said guide and said spring, mechanism whereby said guide may cause disen-

17

gagement between the rolls and the mechanism, substantially as specified.

~~25~~ ~~35~~ 24

The combination with the paper feed rolls, of spring mechanism normally in engagement with the rolls so that power will be stored in the mechanism by the ordinary operations of the rolls, and means for disengaging the mechanism when it is desired to operate the rolls independently, substantially as specified.

~~26~~ ~~36~~ 25

The tabulating machine provided with means for returning the paper so as again to present its starting point at the printing center, substantially as specified.

Insert D/
D

Dorr E. Felt.

Witnesses:

..ay
../99

Edw. S. Evarts

H. M. Munday

OATH.

STATE OF ILLINOIS, }
County of Cook, } ss.

Dorr E. Felt

the above named petitioner, be'ng duly sworn, deposes and says that he is a citizen of the United States and resident of Chicago in the County of Cook and State of Illinois, and that he verily believes himself to be the original, first and sole inventor of the Improvement in Tabulating Machines described and claimed in the annexed specification; that he does not know and does not believe that the same was ever known or used before his invention or discovery thereof, or patented or described in any printed publication in the United States of America or any foreign country before his invention or discovery thereof, or more than two years prior to this application, or in public use or on sale in the United States for more than two years prior to this application, and that no application for a foreign patent has been filed by me or my legal representatives or assigns in any foreign country

Dorr E. Felt.

Sworn to and subscribed before me this twenty-seventh day of May, A. D. 1898

H. M. Munday,
Notary Public.

H. M. MUNDAY
NOTARIAL SEAL
COOK CO ILLS.

. . .682 119 Paper No. ½

Appl'n

Filed May 31 1898

Dorr E. Felt

6 to 25

U. S. PATENT OFFICE

May 31 1898

CHIEF CLERK.

2—260

Div. . . . . Room No. 221 Paper No. 23

J. H. D. DEPARTMENT OF THE INTERIOR

UNITED STATES PATENT OFFICE

WASHINGTON, D. C., July 27, 1898.
MAILED " " "

Dorr E. Felt,
Care Munday, Evarts & Adcock,
906 Marquette Building,
Chicago, Ill.

Please find below a communication from the EXAMINER in charge of your application.

for Tabulating Machines, filed May 31, 1898, serial number 682,119.

C. H. Duell,
Commissioner of Patents.

Claims 1 and 2 are rejected as being met by almost any ordinary typewriting machine.

These claims are also rejected on reference to the patent to Pike, No. 595,864, Dec. 21, 1897 (Calculators Recording).

Claims 3, 4, 5, 6, 7, 8, 9, 10, 11, 12 and 13 are rejected on reference to the patent to Buckhert and Popp, No. 348,511, Aug. 31, 1886 (Type-writing Machines, Carriages).

Claims 14, 15, 16, 18, 19, 20, 21, 33 and 34 are rejected on reference to the patent to Pike.

Wm J Rich
Acting Examr

W J R

Serial No. 682119 Paper No. 2
Rej
Dated July 27 1898

IN THE UNITED STATES PATENT OFFICE.

In the matter of the application of Dorr E. Felt upon Tabulating Machine, filed May 31, 1898, Serial No. 682,119.

State of Illinois, } ss.
County of Cook. }

Dorr E. Felt, being first duly sworn, deposes and says that he is the applicant in the above mentioned application; and that he conceived, explained to others, made drawings of and completed and reduced to practice the invention shown and described in the specification and drawings of his said application and forming the subject-matter of present and original claims claims 1, 2, 14, 15, 16, 18, 19, 20, 21, 33 and 34 as set forth in said claims as follows:

"1. The combination with the printing mechanism adapted to print two or more characters simultaneously and side by side, of a laterally movable paper carriage, devices for feeding the paper longitudinally mounted in said carriage, and automatic mechanism acting in any position of the carriage to actuate said feeding devices in the line spacing movements, substantially as specified."

"2. The combination with a series of type arranged to print side by side, devices for impressing the paper upon the type, a laterally movable paper carriage adapted to position the paper for the different columns, feed rolls for moving the paper longitudinally past the type, and means for actuating said rolls, substantially as specified."

"14. The tabulating machine having in combination movable paper carriage, and mechanism for laterally shifting said carriage at will the width of a column space, substantially as specified."

"15. The tabulating machine wherein are combined a movable paper carriage, and mechanism for laterally shifting said carriage at will, in column spacing, such mechanism embracing a hand lever E, substantially as specified."

"16. The tabulating machine wherein are combined a movable paper carriage, a hand lever E, operable at will, and mechanism connecting said lever with the carriage and adapted to shift the carriage laterally the width of a column space, substantially as specified.

"18. The combination with the notched and movable paper carriage, of a spring actuated pawl normally disengaged from the carriage, and mechanism for moving said carriage laterally and acting to release said pawl so it may engage in the notches upon the carriage, substantially as specified."

"19. The combination in a tabulating machine, of a laterally movable paper carriage, and mechanism for shifting said carriage to form the column spacing, said mechanism being normally disengaged from the carriage, substantially as specified."

"20. The combination in a tabulating machine, of a movable paper carriage which is normally free to be moved by hand, and mechanism for shifting said carriage in forming the column spaces, said mechanism automatically engaging and releasing the carriage, substantially as specified."

"21. The combination in a tabulating machine, of a movable paper carriage normally free to be moved by hand, and mechanism normally disengaged from the carriage but serving when actuated to engage and move the carriage laterally in column spacing, substantially as specified."

"33. The combination with the paper feed rolls and mechanism for returning the paper so as to bring its sop to the printing center, of means for disengaging said mechanism from the rolls while inserting the paper, substantially as specified."

"34. The combination with the paper feed rolls and mechanism for returning the paper so as to bring its top to the printing center, of a movable guide G and connections between said guide and said spring, mechanism whereby said guide may cause disengagement between the rolls and the mechanism, substantially as specified."

many months prior to July 9, 1897, the date of filing the application for patent No. 595,864, of December 21, 1897, to W. H. Pike, upon which patent to Pike the originals of all said claims have heretofore been rejected by the Patent Office.

Affiant further states that his said invention of the subject-matter of said claims of his said application was conceived by him, drawings made of it, explained to others and made and completed and reduced to practice many months prior to September 16, 1896, which is the filing application date of patent No. 580,863 to D. K. J. T. Heitt, of April 20, 1897, which, though not heretofore cited in rejection of his said claims, is believed by affiant to show or disclose the invention covered by said claims, or some of them.

Affiant further states that his aforesaid making, building and reducing to practice of said invention was done by building and successfully operating an experimental tabulating machine embodying the invention shown and described in his said application as set forth in each and all of said claims 1, 2, 14, 15,

16, 18, 19, 20, 21, 33 and 34; and that said experimental tabulating machine was built and completed and successfully operated in the presence of others many months prior to said date, September 16, 1896; that said tabulating machine is still in existence, and was used by affiant's attorneys and draftsman in preparing the drawings and specification of h's said application; that said experimental tabulating machine was never sold nor offered for sale, and was only used experimentally for the purpose of demonstrating the success and practicability of the invention, which it fully did, and was never put in public use, and was the only tabulating machine embodying said invention as set forth in said claims which affiant ever built prior to the date of the filing of his application.

Affiant further states that his said invention was never abandoned by him.

Affiant further states that said experimental tabulating machine so made and experimentally used by him contains a printing mechanism consisting of type adapted to be positioned side by side at the printing center, and hammers for impressing the paper upon the type, a laterally movable paper carriage adapted to position the paper for the printing of the different columns, devices for feeding the paper longitudinally past the type operating in any position of the paper carriage, mechanism for shifting the paper carriage laterally the width of a column space, such mechanism being operable at will and embracing a hand lever, mechanism connecting said lever to the carriage and adapted to shift the latter in column spacing, and all the other features

4

enumerated and claimed in applicant's present claims 1 and 2 and original claims 14, 15, 16, 18, 19, 20, 21, 33 and 34; and so far as the subject-matter of said claims is concerned was substantially identical in construction with the construction shown in the drawings of affiant's said application; and is also substantially the same in other respects with the drawings of his said application, although said drawings contain some added features which were explained orally and by pencil sketches, to enable said draftsman in making the Patent Office drawings to add such features to those shown in said experimental tabulating machine, from which said draftsman in the main copied and prepared said Patent Office drawings of his said application.

Dorr E. Felt.

Subscribed and sworn to before me this
11th day of February A D 1899.

Lewis E. Curtis

Notary Public.

LEWIS E. CURTIS
NOTARY PUBLIC
COOK COUNTY, ILL.

Serial No. 682,119 Paper No. 3
Affidavit
Filed Feb. 13, 1899
Felt

UNITED STAT...
FEB. 13, 1899
...ATENT OFFI...
DIV. 23
FEB 14 1899
U. S. PATENT OFFICE

Chicago, Ill., Feb. 11, 1899.

Room No. 221.
Serial No. 682,119.
Filed May 31,
Tabulating Machines.
Dorr E. Felt.

Hon. Commissioner of Patents,

Washington, D. C.

Sir: Applicant hereby amends as follows:

Change lines 8, 9, 10 and 11 of page 4 to read thus:

A "as will be understood from the patent, they are adapted t enable the operator to preliminarily set the type, side by side necessary to print any amount coming within the capacity of th machine, whether it embraces one figure or several figures; also to print from all the figures which are set, simultaneously and at one operation; also to enable the printing of the total of the amounts or sums added and listed, at any time."

In line 18, page 4, change movable to movably.

Erase claims 1 to 13 both inclusive.

Insert the following as claims 1, 2 and 3.

3/25/99

A' "1. The combination with the printing mechanism adapted to print two or more characters ~~simultaneously and~~ side by side, of a laterally movable paper carriage, devices for feeding the paper longitudinally mounted in said carriage, and automatic mechanism acting in any position of the carriage to actuate said feeding devices in the line spacing movements, substantially as specified.

"2. The combination with a series of type arranged to print side by side, devices for impressing the paper upon the type, a laterally movable paper carriage adapted to position the paper for the different columns, feed rolls for moving the paper longitudinally past the type, and means for actuating said rolls, substantially as specified."

2

3/99 "3. The tabulating machine wherein are combined a laterally movable paper carriage and its paper feeding roll or rolls, printing mechanism, and automatic mechanism whereby the paper is moved back longitudinally to its starting position, substantially as specified."

Renumber.

Applicant accompanies this amendment with an affidavit carrying the date of his invention back of Pike's filing date, under rule 75.

Very respectfully submitted,

Dorr E. Felt.

by Munday Evarts & Adcock

his attys.

Note:

The affidavit accompanying this letter shows that applicant had completed his invention so far as the same is covered by former claims 1, 2, 14, 15, 16, 18, 19, 20, 21, 33 and 34 prior to the filing date of the Pike patent upon which these claims were rejected.

While the new claims 1 and 2 are intentionally made broad, and probably broad enough to cover Pike's construction, and also the construction set forth in Hiett's patent No. 580,863, April 20, '97, (which by the way is also too late in date to serve as a reference as the Examiner will see by the affidavit) yet we do not think they are laid to the same matter as any claim in either of those patents. The 1st claim of Pike is nearest in this respect, and yet it specifies as an element "a support for a sheet of paper to be printed adapted to be set opposite the printing type", a feature which neither applicant or Hiett shows, but which Pike was obliged to insert in his claim to avoid a rejection upon Hiett. That the support referred to in the

language quoted is the platen is obvious from the matter beginning on line 24, page 3, of Pike's specification.

We believe the case should now be allowed.

Very respectfully submitted,

Dorr E. Felt.

by Munday Evarts & Adcock

his attys.

Serial No. 682,119 Paper No. 4

Amendment A

Filed Feb. 13" 1899

Felt

1 & 2

...TED STAT...

FEB 13 1899

...T OFF...

DIV. 23

FEB 14 1899

U. S. PATENT OFFICE.

2—260

Div. ..... Room No. 221 Paper No. .....

J. H. D. DEPARTMENT OF THE INTERIOR

UNITED STATES PATENT OFFICE

WASHINGTON, D. C., February 28, 1899.

MAILED " " "

Dorr E. Felt,

Care Munday, Evarts & Adcock,

906 Marquette Building,

Chicago, Ill.

Please find below a communication from the EXAMINER in charge of your application.

for Tabulating Machines, filed May 31, 1898, serial number 682,119.

C. H. Duell,

Commissioner of Patents.

Claims 3, 4, 5 and 6 are broad enough to be met by any ordinary type-writer and for such reason are rejected.

Claims 3, 4, 5, 6, 8, 9, 10, 11, 23 and 24 are rejected on reference to the patents cited in the last office letter.

This last rejection is made for the reason that applicant's affidavit is insufficient in view of the Commissioner's decisions in ex parte Gasser, 17 O. G., 507, C. D., 1880, 94; ex parte Saunders 23 O. G., 1224; C. D., 1883, 23; ex parte Hunter, 49 O. G., 733; C. D., 1889, 218; ex parte Boyer, 49 O. G., 1985; C. D. 1889, 249; ex parte Donovan, 52 O. G., 309, C. D., 1890, 109, and ex parte Hurlbut, 52 O. G., 1062, C. D., 1890, 135.

From these decisions it can be seen that an affidavit under Rule 75 must contain more than applicant has covered. The facts upon which applicant relies to establish the truth of the affidavit should be presented before the office. Especial attention is called to the Donovan decision as setting forth the requisites.

W. J. R. J. T. Newton Ex

682,119 5
Serial No. 679461 Paper No. 4
Letter Rejection
Dated Feby 28 1899
D E Felt.

Chicago, Ill., March 20, 1899

Room No. 221.
Serial No. 682,119.
Filed May 31, 1898.
Tabulating Machines.
Dorr E. Felt.

Hon. Commissioner of Patents,

Washington, D. C.

Sir: Applicant amends as follows:

In claim 3, line 3, before mechanism insert automatic.

Change claims 4 and 5 to read thus:

"4. The tabulating machine having in combination a laterally movable paper carriage, means for feeding the paper vertically in any position of the carriage, and mechanism for shifting the carriage laterally the width of a column sface, substantially as specified."

B

"5. The tabulating machine having in combination a laterally movable paper carriage, means for feeding the paper vertically in any position of the carriage, and mechanism for shifting the carriage laterally the width of a column space, such mechanism embracing a hand lever E, substantially as specified."

In claim 1, line 2, erase "simultaneously and"

Erase claim 6 and renumber.

Very respectfully submitted,

Dorr E. Felt.

by Munday Evarts & Adcock

his attys.

Note:

Applicant now meets the reference Pike by his original affidavit supplemented by a second affidavit herewith filed, and to the latter affidavit he attaches a photograph of his first machine taken months before Pike and Hiett's filing dates, and showing also three columns of tabulated work done by the machine.

This photograph shows clearly we think that applicant had a working tabulating machine at the time alleged in his first affidavit. If the Examiner still feels that this photograph does not clear up the insufficiency of the first affidavit, applicant will produce the original machine for the Examiner's inspection. But to do so will involve considerable trouble and expense from which applicant would like to be relieved if possible.

Very respectfully submitted,

Dorr E. Felt.

by Munday Evarts & Adcock

his attys.

UNITED STATES
MAR 25 1899
PATENT OFFICE.

22.000				
.140.000				
.100.000				
20.000				
.200.000				
20.000				
60.000				
6.000				
15.126				
.300.000				
.946				
32.001				
30.000				
12.600				
15.000				
30.000				
15.064				
25.000				
6.000				
10.000	43.096	4.659	2.795	1.837
20.000	10.015	4.911	.956	48.958
20.000	13.813	.470	.309	.277
18.000	15.376	2.289	13.533	45.718
36.000	12.790	9.548	. 38	.672
25.200	21.326	.986	3.104	.107
16.000	.165.606	7.943	1.166	13.575
49.812	.101.698	3.541	.606	.388.952
28.111	52.368	.332	1.837	8.965
28.000	15.863	4.889	.875	.887.365
20.000	28.720	1.759	1.996	1.328
20.000	8.620	1.472	15.637	.100
1.340.860	.489.291	42.799	42.852	1.397.854

14.648	82.401	.128.233	.329.283	.103.368	91.610
.107.078	.101.960	.123.691	32.127	30.445	59.884
25.882	22.439	.610.477	.338.065	22.308	.103.626
15.396	62.639	54.001	.188.092	30.491	.141.690
.106.339	51.986	.331.139	.580.450	.124.941	82.501
.269.343	.321.425	1.247.541	1.468.017	.311.553	.479.311

UNITED STATES
MAR 25 1899
PATENT OFFICE.
DIV. 23.
MAR 27 1899
U. S. Patent Office.

IN THE UNITED STATES PATENT OFFICE.

In the matter of the application of Door E. Felt upon Tabulating Machine. Filed May 31, 1898, Serial No. 682,119.

State of Illinois, }
County of Cook. } ss.

Dorr E. Felt, being duly sworn, says he is the applicant in the above mentioned application, and the same Door E. Felt whose affidavit was heretofore filed under Rule 75 for the purpose of overcoming the patent to Pike, cited as a reference to certain claims made by affiant. Affiant now supplements his said affidavit, and produces in support thereof, the mounted photograph hereto attached and marked "Photograph First Felt Tabulator. H. M. M. N. P." And affiant says that said photograph was taken from the identical machine mentioned in affiant's said previous affidavit, and the same was taken and printed and mounted as it now appears in said exhibit many months prior to September 16, 1896. That the tabulating work shown upon the sheet of paper appearing in said photograph was produced by the machine aforesaid, just prior to the taking of said photograph.

Affiant further says that in operating said machine, the keys of the figures composing the number to be printed were first struck, each key causing the printing by its corresponding type; ~~struck keys~~; the lever shown at the right of the machine was then depressed, thereby feeding the paper vertically a line space. When the column was completed by repeated operations such as set forth the lever at the left of the machine was operated to shift the paper carriage laterally, and the paper was returned so as to present its top to the printing level, by turning back the paper rolls, or one of them, by hand. The carriage could also

be shifted laterally by hand at any time independent of said lever. The operator in striking the keys commenced at the lowest figure and proceeded to the highest, omitting the zeros which were printed automatically with the striking of the next highest digis.

Affiant also produces and attaches hereto two sheets of paper containing tabulating work done on the identical tabulating machine mentioned in his first affidavit aforesaid. That such work was done on this 22nd. day of March, A. D. 1899. Affiant further says the machine referred to has not been changed in any particular since said photograph was taken, except that one of the feed rolls has been grooved as shown at D^5 Fig. 5 of applicant's drawing, and the bell D, spring arm D^7, shaft D^2 and lever D^4, intended to give an alarm when the bottom of the sheet is reached, have been added.

Dorr E. Felt.

Subscribed and sworn to before me this 22nd. day of March, A. D. 1899

H. M. Munday,

H. M. MUNDAY,
NOTARIAL SEAL
COOK CO ILLS.

Notary Public.

Serial No. 682. 119 Paper No. 6
Amendment B
Filed Mar. 25″ 1899
Felt
4 & 5

UNITED STATES
MAR 25 1899
.....FFICE.

2—260

Div..... Room No. 219 Paper No.....

DEPARTMENT OF THE INTERIOR

J. H. D.

UNITED STATES PATENT OFFICE

WASHINGTON, D. C., April 11, 1899.
MAILED " " "

Dorr E. Felt,

Care Munday, Evarts & Adcock,

*906 Marquette Building,

Chicago, Ill.

Please find below a communication from the EXAMINER in charge of your application.

for Tabulating Machines, filed May 31, 1898, serial number 682,119.

C. H. DUELL
Commissioner of Patents.

Claim 3 is rejected as covering the construction common to almost any type-writer.

In view of the affidavit and exhibits last filed, the rejection of the remaining claims is withdrawn.

W. J. R. J. T. NEWTON Ex

Serial No. 682119 Paper No. 7
Rej
Dated Apl 11 1899

Chicago, Ill., April 22, 1899.

Room No. 219.
Serial No. 682,119.
Filed May 31, 1898.
Tabulating Machines.
Dorr E. Felt.

Hon. Commissioner of Patents,
Washington, D. C.

Sir: Applicant hereby amends as follows:

Change claim 3 to read as follows:

---

3. "The tabulating machine wherein are combined a paper carriage which is laterally movable to allow the spacing of the columns, feeding devices on said carriage operating in any position of the carriage to feed the paper longitudinally in line spacing, devices, also operable in any position of the carriage, whereby the paper feeding devices may be reversed and caused to return the paper longitudinally to its starting position, and actuated by the lateral movement of the carriage means for setting said last mentioned devices in operation, substantially as specified."

Very respectfully submitted,
DORR E. FELT.
by Munday Evarts & Adcock
his attys.

Serial No. 682.119 Paper No. 8
Amendt. C.
Filed May 3d 1899
Felt

3

DIV. 23.
MAY 3 1899
U. S. Patent Office.

Hon. Commissioner of Patents,

In the matter of the application of Dorr E. Felt for Tabulating Machine, No. 682 119, I hereby amend by inserting the following claims: . . . .

---

26 The combination with a laterally movable paper-carriage and means for feeding the paper longitudinally, of a shaft connected to and driving said feeding means, a gear on said shaft acting to rotate the same, and means for actuating said gear, substantially as specified.

D 27 The combination with a laterally movable paper carriage and means for feeding the paper longitudinally, of a shaft supported in and moving with said carriage and connected to and driving said feeding means, a gear through which said shaft is free to move longitudinally and which serves to rotate the shaft, and means for actuating said gear, substantially as specified. . .

DORR E. FELCLT, by
Munday Evarts & Adcock att'ys

Serial No. 682,119 Paper No. 9 8
D
Amendt. C
Filed May 10" 1899
Felt
26 & 27

DIV. 23.
MAY 10 1899
U. S. Patent Office.

Issue Division. Serial No. 682,119

DEPARTMENT OF THE INTERIOR,

UNITED STATES PATENT OFFICE,

WASHINGTON, D. C.,

Dorr E. Felt June 8, 1899
C/o Munday Evarts & Adcock
906 Marquette Bldg.
Chicago, Ills.

SIR:

Your *application* for a patent for an *improvement in*.....

.....

Tabulating Machines

.....

filed May 31, 1898, 190.., has been examined and *allowed*.

The final fee, Twenty Dollars, must be paid, and the Letters Patent bear date as of a day not later than *six months* from the time of this present notice of allowance.

If the final fee is not paid within that period the patent will be withheld, and your only relief will be by a renewal of the application, with additional fees, under the provisions of Section 4897, Revised Statutes. The office aims to deliver patents upon the day of their date, and on which their term begins to run; but to do this properly applicants will be expected to pay their final fees at least *twenty days* prior to the conclusion of the six months allowed them by law. The printing, photolithographing, and engrossing of the several patent parts, preparatory to final signing and sealing, will consume the intervening time, and such work will not be done until after payment of the necessary fees.

When you send the final fee you will also send, *distinctly and plainly written*, the name of the *inventor* and *title of invention as above given*, *date of allowance* (which is the date of this circular), *date of filing*, and, if assigned, the *names of the assignees*.

If you desire to have the patent issue to *assignees*, an assignment containing a *request* to that effect, together with the *fee* for recording the same, must be filed in this office on or before the date of payment of final fee.

Additional copies of Specifications and Drawings will be charged for at the following rates: Single Copies, uncertified, 10 cents each. The money should accompany the order.

Very respectfully,

C. H. DUELL

Commissioner of Patents.

After allowance, and prior to payment of the final fee, applicants should carefully scrutinize the description to see that their statements and language are correct, as mistakes not incurred through the fault of the office, and not affording legal grounds for reissues, will not be corrected after the delivery of the letters patent to the patentee or his agent.

In Remitting the Final Fee Give the Serial Number at the Head of this Notice.

The within title is that given by the Examiner in charge, as most appropriate to your invention. Should you desire a change in the same, satisfactory reasons MUST be given therefor on or before the payment of the final fee.

If payment is made by check or draft, the credit allowed is subject to the collection of the same.

AMOUNT RECEIVED
$20
CHIEF CLERK. 2—327.
CK

MEMORANDUM
OF
FEE PAID AT UNITED STATES PATENT OFFICE.

(Be careful to give correct Serial No.)

Serial No. 1682,199 , 18.....
INVENTOR:
Dorr E. Felt.

.....

PATENT TO BE ISSUED TO
Dorr E. Felt

.....

NAME OF INVENTION, AS ALLOWED:
Tabulating Machine

.....

DATE OF PAYMENT:

.....

FEE:
$20.00

DATE OF FILING:
May 31, 1898
June 8, 1898

.....

DATE OF CIRCULAR OF ALLOWANCE:
June 8, 1899

The Commissioner of Patents will please apply the accompanying fee as indicated above.

MUNDAY EVARTS & ADCOCK
Attorney.

SEND PATENT TO
Munday Evarts & Adcock
906 Marquette Bldg.
Chicago Ills.

6—1846

(Copy of Patent 628176 inserted here)

U. S. PATENT OFFICE,
JUN 14 1899
CHIEF CLERK.

[See Exhibit Copies of Patents for Copy of this Patent 628176.]

..RS, K
...ENTS,
....rding.

1898.

CONTENTS:

2 Application 1 papers.

1. Print July 18/98
2. Rejection July 27 1898.
3. Affidavit Feb. 13/99
4. Amendt. A. Feb. 13/99
5. Rejection Feb 28, 1899.
6. Amdt. B. Mar. 25/99
7. Rejection Apr. 11, 1899.
8. Amdt. C. May 3d/99
9. Amdt. D May 10/99
10.
11.
12.
13.
14.
15.
16.
17.
18.
19.
20.
21.
22.
23.

TITLE:

Improvement in Tabulating Machines.

CONTENTS:

Application papers.

1.
2.
3.
4.
5.
6.
7.
8.
9.
10.
11.
12.
13.
14.
15.
16.
17.
18.
19.
20.
21.
22.
23.

TITLE:

Improvement in

PLAINTIFF'S REBUTTAL TESTIMONY.

IN THE SUPREME COURT OF THE DISTRICT OF COLUMBIA.

Comptograph Company,
Plaintiff,
vs.
Adder Machine Company,
Defendant.
} In Equity, No. 29,220.

Deposition of Plaintiff's Witness, Joseph A. V. Turck.

To Messrs. Kerr, Page, Cooper & Hayward,
Solicitors for Defendant.

You will please take notice that commencing on Thursday morning, the 14th inst., at 10 A. M., at our offices, No. 907 Marquette Building, Chicago, Illinois, before a notary public duly qualified, we shall proceed to take the testimony of Joseph A. Turck, of Chicago, Illinois, and possibly others, on behalf of the plaintiff, in rebuttal, in the above entitled cause. You are invited to attend and cross-examine.

MUNDAY, EVARTS, ADCOCK & CLARKE,
Solicitors for Plaintiff.

Chicago, Ill., December 11, 1911.

Received a copy of the above and foregoing notice this 12th day of December, 1911.

(Signed) KERR, PAGE, COOPER & HAYWARD,
Solicitors for Defendant.

CHICAGO, December 14, 1911.

IN THE SUPREME COURT OF THE DISTRICT OF COLUMBIA.

Comptograph Company,
Plaintiff,
vs.
Adder Machine Company,
Defendant.
} In Equity, No. 29,220.

Testimony taken on behalf of the plaintiff, in rebuttal in the above entitled cause, pursuant to agreement and the annexed notice, at the offices of Messrs. Munday, Evarts, Adcock & Clarke, 907 Marquette Building, Chicago, Illinois, commencing at 11:30 A. M. on Thursday, December 14, 1911, before H. M. Munday, a notary public duly qualified.

Present: Henry Love Clarke, Esq., for plaintiff.

Deposition of Plaintiff's Witness, Joseph A. V. Turck.

JOSEPH A. V. TURCK, a witness produced on behalf of the plaintiff, being first duly sworn, deposes as follows in answer to interrogatories by counsel:

Q. 1. Please state your name, age, residence and occupation?

A. My name is Joseph A. V. Turck, my age is 41, my residence is Chicago, Illinois, and my occupation is mechanical expert for the Felt & Tarrant Mfg. Co., manufacturers of the adding machine known as the Comptometer.

Q. 2. Please state how long you have been engaged in adding machine work, and in what successive capacities or relation to it?

A. I have been engaged in adding machine work since about 1893 or 1894. I was first engaged in model work on such machines. About the year 1896 I invented improvements in adding machines for which patents were

Deposition of Plaintiff's Witness, Joseph A. V. Turck.

taken out later. In the year 1899 I was engaged by the Mechanical Accountant Co., of Providence, R. I., as inventor and superintendent and continued in their service in such employment until the year 1904. In the year 1906 I entered the employ of the Providence Mfg. & Tool Co., of Providence, R. I., as manager for that company, and continued in their service until May 1, 1911. In my employment as manager for the Providence Mfg. & Tool Co. I had the whole supervision of the manufacture of the adding machine known as the Mechanical Accountant, which was manufactured by them for the Mechanical Accountant Co. Since May 1, 1911, I have been employed by the Felt & Tarrant Mfg. Co., manufacturers of the Comptometer. My employment in the said company is that of supervision of the experimental department, next under Mr. Felt, who is president and chief mechanical engineer.

Q. 3. What was the business of the Mechanical Accountant Co. you referred to?

A. The Mechanical Accountant Co. were engaged in the manufacture and improvement of the adding machine known as the Mechanical Accountant.

Q. 4. How were you occupied during the period between the dates 1904 and 1906, mentioned in your preceding answer?

A. Between the dates 1904 and 1905 I was employed as designer by the Brown & Sharpe Mfg. Co., of Providence, R. I., manufacturers of machine tools. Between 1905 and 1906 I was engaged in designing automatic machinery for the manufacture of shoe eyelets.

Q. 5. What is the general nature and character of the manufacturing business of Brown & Sharpe, whom you mentioned?

A. They manufacture machines used in the machinists' business known as milling machines, automatic

Deposition of Plaintiff's Witness, Joseph A. V. Turck.

screw machines, gear cutting machines, automatic forming machines, grinding machines, and small tools used by machinists for measuring, such as scales and calipers. They also manufacture a line of drafting instruments, straight edges and other small tools.

Q. 6. What is the nature of their work with respect to precision and precision instruments?

A. The machines and small tools manufactured by them are generally conceded to be of the finest quality and precision of their kind.

Q. 7. You mentioned the fact that some of the adding machine mechanism you had designed for the Mechanical Accountant had been shown in patents. Can you tell us the numbers of some of these patents?

A. The numbers of two of the principal patents are 679,348 and 720,086. There are others, the numbers of which I do not recall, without looking up the records.

Q. 8. Please state whether or not you have examined the plaintiff's exhibit machines in evidence as the "Roll Paper Comptograph" and the "Felt's 1890 Model"?

A. Yes, in a general way, so far as the mechanism appears without removing the case.

Q. 9. Have you examined with care the mechanism that appears without removing the wooden cases of these machines?

A. Yes, I believe I have.

Q. 10. Does your last answer include the mechanism that is disclosed by removing the metal back plate of the "Felt's 1890 Model" which I observe is detached?

A. When I made the examination it was already detached and so I did not consider it in my last answer. Therefore the mechanism disclosed was part of my examination.

Q. 11. Have you examined and do you understand the machine shown and described in the exhibit "Felt Patent No. 441,233"?

Deposition of Plaintiff's Witness, Joseph A. V. Turck.

A. Yes.

Q. 12. Have you examined and do you understand the drawings and descriptions in the exhibits "Gathright Patent No. 436,196" and "Silkman Patent No. 436,319"?

A. Yes.

Q. 13. Have you examined the plaintiff's Exhibit in evidence as "Drawings of the Felt 1890 Machine" (being the drawings following page 292 of the printed record stipulated into this case from the case of Comptograph Co. *vs.* Burroughs Adding Machine Co.)?

A. I have.

Q. 14. From the examinations you have made, please state what had to be done to produce the before mentioned "1890 Machine" from a machine identical with the exhibit "Roll Paper Comptograph". (You may assume that the exhibit "Drawings of Felt's 1890 Machine" correctly show the mechanism of the exhibit "Felt's 1890 Model"; and that the mechanism of the exhibit "Roll Paper Comptograph" is correctly shown in the exhibit "Felt Patent No. 441,233" except for the several details mentioned by Mr. Felt in his answer to R-X. Q. 475 in the printed record stipulated into this case from the case of Comptograph Co. *vs.* Burroughs Adding Machine Co.) Please also state whether or not the before mentioned Silkman or Gathright patents would be of aid in changing the "Roll Paper Comptograph" into a machine having the functions and purposes of the aforesaid Felt's 1890 Machine?

Recess.

A. The "Roll Paper Comptograph" shows a means of printing items on a strip of roll paper as they are added. Each item is printed directly under the other, units under units and the tens under the tens. The exhibit "Felt's 1890 Model," which I will for convenience

Deposition of Plaintiff's Witness, Joseph A. V. Turck.

call the 1890 machine, shows a means of printing columns of figures side by side at the will of the operator, so that the item in each column is in perfect alignment with the relative item in all other columns. In the 1890 model as in the exhibit "Roll Paper Comptograph" the items of each column are printed one under the other, the units under the units and tens under the tens. Eliminating the mechanism shown in the 1890 model, the first requisite seems to be the conception of printing columns and figures side by side on a sheet of paper. To accomplish this, it would be necessary to devise a mechanism for holding a sheet of paper and shifting it laterally as well as vertically. To accomplish this, it was necessary to protect the paper from entanglement as it passed both laterally and vertically by the mechanism required for printing. The exhibit, "Roll Paper Comptograph," shows no means for holding a sheet of paper and shifting it laterally. It was, therefore, first necessary to conceive means for such a purpose in the 1890 model, which I note was accomplished by means of a laterally moving carriage and a device for moving it laterally from right to left. As the sheet of paper had to be shifted vertically and the paper carriage through its lateral movement interfered with the shifting of the paper vertically, it is obvious that it was necessary to devise a special device for the purpose. To devise a laterally-moving carriage, whereby the columns of items could be printed side by side, each item being a number which may be expressed in from one to many figures, it was necessary to provide feed rolls, paper guides and sufficient guides for the carriage to move laterally on the framework of the machine. It was also necessary to provide a device for tightening and loosening the pressure between the paper rolls and a device on which the rubber buffer could be held in position for printing, but that could be thrown

Deposition of Plaintiff's Witness, Joseph A. V. Turck.

out of contact with the paper when it was necessary to insert a sheet. On account of the lateral movement of the carriage, it was impossible to drive the paper feed rolls direct. Therefore it was necessary to provide some means of transmission, by which the rotation of the rolls could be effected from a stationary device, it being obvious that means for operating the rolls should be directly under the hand of the operator while manipulating the keys. To hold these different devices a suitable carriage frame had to be designed that would allow of the proper working of such devices and of a capacity to allow a wide sheet to be carried. As shown in the 1890 model, the provision made for the carriage is a framework consisting of two long, round bars held parallel to one another by a cast bracket or yoke near their free ends. The parallel bars act as guides for the lateral movement of the carriage. The feed rolls for line spacing had to perform quite a more difficult operation in shifting the paper vertically for line spacing than in the exhibit "Roll Paper Comptograph." In printing numerical items in columns so that relative items would be in perfect alignment laterally it was necessary on account of the great length required in the rolls to make them heavier and provide means for considerable pressure.

Adjourned to 10 A. M. Friday, December 15, 1911.

CHICAGO, December 15, 1911.

Met pursuant to adjournment. Present, counsel as before.

(Witness continuing answer.)

The exhibit "Roll Paper Comptograph" not only prints, but adds, and prints each numerical item in a column as they are added, the units under the units and tens under tens. The 1890 model not only adds and prints the numerical items as they are added, but has the capacity

Deposition of Plaintiff's Witness, Joseph A. V. Turck.

of printing them in a series of columns not shown in the exhibit "Roll Paper Comptograph." In the exhibit "Roll Paper Comptograph" there being only the means of adding and printing the numerical items in a single column as they are added, it requires only the positioning of the paper for a single column. This is accomplished by the feed rolls unwinding the paper from the roll, which acts as a guide and friction device to keep it taut. In the side by side printing of columns, as shown in the 1890 model, it was necessary to position and guide the sheet of paper so that each numerical item, as it was added and printed, would line up vertically, the units under the units and tens under tens, etc., without displacement. In the use of a sheet of paper, there was no means of guiding it vertically, as is shown in the exhibit "Roll Paper Comptograph."

In the 1890 model, the only means for guiding the paper vertically, so as to print the numerical items in columns as they are added, are the paper feed rolls. On account of the small space obtainable for passing the rolls laterally through the mechanism of the adding and printing machine shown in the 1890 model, the rolls could not be made of sufficient diameter to keep the alignment of the paper vertically. On account of their small diameter it was necessary to have considerable pressure between the rolls. It was necessary to mount these long paper feed rolls on the carriage so that they could be rotated to shift the sheet of paper vertically for line spacing. It was, therefore, necessary to make them rotatable in the frame of the carriage and provide means for pressure between the rolls. This was accomplished in the 1890 model by journaling the shaft on which the main roll is mounted in the frame, while the pressure roll is mounted loosely in the frame of the carriage with spring-pressed devices forcing it against the main roll.

Deposition of Plaintiff's Witness, Joseph A. V. Turck.

On account of the pressure between the feed rolls in the 1890 model and the necessary construction of the carriage, it was a great advantage to relieve the pressure between the feed rolls when inserting a sheet of paper. To relieve the pressure between the rolls there is shown in the 1890 model devices for throwing out the spring-pressed devices which cause the pressure between the rolls, thereby allowing the sheet of paper to be inserted and lined up for the printing of the columns of numerical items as they are added.

To hold the paper in a vertical plane between the hammers of the type segments, and to shift it laterally, required some means of holding it above the type and hammers that would clear the framework on which the hammers and their tripping devices and other mechanism is mounted.

In the exhibit "Roll Paper Comptograph" the tension of the roll on which the paper is wound, combined with a spring-pressed paper guide, form the means for this purpose, as much as required for the strip roll paper.

In the 1890 Model, on account of the use of the sheet of paper, it was necessary to devise a guide to take the place of the friction roll on which the paper is wound in the exhibit "Roll Paper Comptograph." This was accomplished in the 1890 Model by a number of C-shaped guides fastened to the upper bar, which forms the guide for the carriage.

In the 1890 Model provision was made to take the place of the spring-pressed guide shown in the exhibit "Roll Paper Comptograph," by providing a series of finger guides. These guides were mounted on a shaft or rod and fastened to the rod so that their free ends are in line. The rod acts as a pivot and is pivotally mounted at each end in the carriage frame.

Provision is made for friction against the pivot rod. The friction on the pivot rod formed the means for hold-

Deposition of Plaintiff's Witness, Joseph A. V. Turck.

ing the finger paper guides in a fixed position at the will of the operator, for the purpose of holding the sheet in a vertical plane or while inserting it.

In the exhibit "Roll Paper Comptograph" the spring-pressed paper guide is a wire frame pivoted at each end to the frame of the machine. The lower part of this wire frame forms a guide for the paper as it passes directly over the feed roll, and acts as a means of holding the roll paper forward so as to be in line and against the looped end of the paper as it returns from under the roll up over the top wire of the spring-pressed guide.

Recess.

In the 1890 Model such a device was not practical owing to the necessity for inserting the sheet paper. It was necessary, however, to provide a means of guiding the free end of the sheet around the feed roll and in between it and its pressure roll.

In the 1890 Model this was accomplished partly by a movable guide and partly by stationary guides. The movable guide shown in the 1890 Model is a long strip of metal extending the length of the carriage and pivoted to the frame of the carriage similar to a trap door. At the right hand end of the movable guide the pivot extends through the frame to allow the attachment of a lever by which the movable guide may be operated. It will be noted that one edge to this guide in operating the lever may be swung upward out of the way of the paper so as to allow a free end of a sheet of paper to be entered over the top of the roll. When the free edge of the movable paper guide is down, it forms the means of keeping the rear portion of the looped paper against the front portion of the loop. On each end of this movable guide are small brackets designed to hold the rubber buffer against which the hammers strike in the additive printing operation. The device in exhibit "Roll Paper Comptograph"

Deposition of Plaintiff's Witness, Joseph A. V. Turck.

I have mentioned as the spring-pressed paper guide, is or might be considered of a similar nature, but as the exhibit "Roll Paper Comptograph" was only used for roll paper, it was not necessary to provide means for operating such a device by one hand as is obviously necessary in a machine like the 1890 Model as a time-saving device where sheets of paper are likely to be inserted quite often.

The movable guide in the 1890 Model also forms a means of disengaging a pawl from a ratchet that would interfere with the re-setting of the sheet of paper as is necessary in the printing of columns of numerical items side by side as they are added. As this necessity does not arise in the exhibit "Roll Paper Comptograph" it is apparent that the moving paper guide performs an extra function.

One of the stationary guides is in the form of a strip of sheet metal bent to conform to the main feed roll and is a continuation from the pivotal edge of the movable guide. The other edge extends between the rolls near to the point of meeting. The guide is fastened at each end of the frame of the carriage in such a way as to allow a space between it and the main feed roll for the passage of the paper. Two other stationary guides of a similar nature extend along the front of the roll and are fastened at each end of the carriage.

While there are guides in the exhibit "Roll Paper Comptograph" which are made to perform a similar function, they were entirely unsuited to the function of handling the requirements of those shown in the Model 1890, owing to the necessity that arises from the continuous entering of sheets of paper and the fact that they were not adapted to be used on a carriage.

While I have only mentioned these guides as a means of entering the sheet paper, they also form a means of

Deposition of Plaintiff's Witness, Joseph A. V. Turck.

guiding the paper up and down, making it necessary to perfect those similar to the ones shown in the exhibit "Roll Paper Comptograph," and to provide an entirely new stationary guide such as is shown in the stationary sheet metal guide extending back of and around under the main feed roll.

As the strip of paper of the exhibit "Roll Paper Comptograph" is made to travel but one way, it was necessary to devise the new guides and attach them to the carriage as is shown in the 1890 Model.

In an adding machine of the type shown in the 1890 Model where the numerical items are added and printed in columns side by side it was necessary to provide a means of shifting the carriage laterally to enable the operator to add and print the columns side by side. It is obvious that such a device must be of a nature to locate and leave put, the carriage on which the paper is mounted. To enable such a device to act upon the carriage constructive means were necessary. To this end there is shown in the 1890 Model notches cut transversely in the lower guide bar of the carriage.

Adjourned to 10 A. M. Saturday, December 16, 1911.

CHICAGO, December 16, 1911.

Met pursuant to adjournment. Present as before.

(Witness continuing answer.)

In an adding machine of the type shown in the 1890 Model where the numerical items as they are added are recorded in columns with their denominational digits in perfect alignment it is sometimes desirable to print the columns some ways apart. In order to shift the carriage quickly the handle on the end of the carriage for operating the rolls is designed in such a way as to serve the purpose. Besides the handle on the end of the carriage for operating the roll it was necessary to provide means

Deposition of Plaintiff's Witness, Joseph A. V. Turck.

directly accessible to the hand of the operator, when manipulating the keys in adding and printing the numerical items. As the items must be printed one under the other vertical line spacing without shifting the carriage laterally was necessary.

In the exhibit "Roll Paper Comptograph" there is no shifting of the paper laterally to print a series of columns and no carriage for holding the paper. The paper had only a vertical movement for line spacing and the feed rolls are stationary laterally. To turn the rolls for line spacing a ratchet and lever action was supplied, and connected to the type hammer setting device so that as the type hammers were reset after the adding and printing of a numerical item, the ratchet and lever device turned the feed rolls causing the paper to move vertically to a position that would allow the printing of the next numerical item to be added. This ratchet and lever device for operating the paper feed rolls in the exhibit "Roll Paper Comptograph" is directly attached to the main feed roll arbor.

In the 1890 Machine owing to the laterally moving carriage it was not practical to drive the feed rolls direct as in the exhibit "Roll Paper Comptograph." To provide means by which the rolls on the laterally moving carriage could be operated it was necessary to provide some means of transmission that would allow of the traverse action of the carriage. In the carriage of the 1890 Machine such a device is shown in the form of a splined shaft journaled in the right hand end of the frame of the carriage and extending to the left nearly the length of the carriage and parallel with its guides. On the right hand end of the splined shaft is a spur gear meshing with a similar gear on the arbor of the main feed roll.

To use a carriage on the 1890 Machine it was necessary to provide a suitable frame work to act as a support and

Deposition of Plaintiff's Witness, Joseph A. V. Turck.

guide. In the 1890 Machine the frame consists of a heavy sheet metal box-shaped arrangement fastened to the rear of the frame work which supports the adding machine mechanism. A reinforcement was provided in the shape of two C-shape castings fastened on each side of the adding machine frame work and to the box-like construction of the new frame work by a brace which extends across the top and is fastened to each of the C-shape castings. In devising the frame work it is necessary not only to provide means for supporting and guiding the carriage. It was also necessary to allow for clearance of the laterally moving carriage and the support of several other devices not shown in the exhibit "Roll Paper Comptograph."

Recess.

In the exhibit "Roll Paper Comptograph" the lever and ratchet device for operating the feed rolls in line spacing consists of a ratchet fast on the arbor of the main feed roll a disc mounted loosely on the arbor beside the ratchet, a spring-pressed pawl mounted on the disc and engaging the teeth of the ratchet, a link having one end pivoted to the disc, and its other end pivoted to one end of an arm which has its other end fast to the pivot shaft of the hammer re-setting lever. On account of the carriage in the 1890 Machine it was impossible to use such a device even for driving the feed roll transmission shaft which forms one of the devices of the carriage. It was, however, desirable to drive the feed roll transmission shaft of the carriage from the lever which re-sets the type hammers as it would save the operator an extra operation.

In the exhibit "Roll Paper Comptograph" and in the 1890 Machine the hand lever and the rock-arm for re-setting the type hammers are practically the same while the connecting links differ. In the "Roll Paper Compto-

Deposition of Plaintiff's Witness, Joseph A. V. Turck.

graph'' the link is practically straight. In the 1890 Machine such a link was impossible, as the carriage travels through the space it would occupy. To overcome this difficulty and provide a means for actuating the feed roll transmission shaft of the carriage a C-shaped link was devised to connect the hand lever and rock-arm. In each of the C-shaped castings of the carriage-supporting frame of the 1890 Machine and in line with the feed roll transmission shaft are two journal bearings which form a support and bearing for the rotary and traverse action of the said shaft. Held against the right hand journal bearing and mounted on the transmission shaft is a grooved sleeve. Extending into the groove and fast to the carriage-supporting frame is a key which prevents lateral movement of the grooved sleeve with the transmission shaft. Fast to the inside of the grooved sleeve and loose in the spline of the transmission shaft is a key which allows of a traverse movement of the shaft, but makes the sleeve rotatable with it. Fast on the grooved sleeve and rotatable with it is a ratchet and star wheel. In the design of the C-shaped link of the type hammer re-setting device it was necessary to consider a means for operating the feed rolls that could be thrown in and out of action momentarily, so that the feed rolls could be operated to move the sheet paper back and forth through the feed rolls. It was also necessary to provide such means in printing numerical items for cross footing, as the line spacing that would occur otherwise would throw the items of the cross footing out of alignment laterally. In the ''Roll Paper Comptograph'' there is only means for shifting the paper one way and no means provided for cross footing, therefore such devices were not needed, so they were entirely new in the 1890 Machine.

Adjourned to Monday morning, December 18, 1911.

Deposition of Plaintiff's Witness, Joseph A. V. Turck.

CHICAGO, December 18, 1911.

Met pursuant to adjournment. Present as before.

(Witness continuing answer.)

I have already described the stationary ratchet and its connection with the feed roll transmission shaft of the 1890 Machine. This ratchet forms a stationary means for driving the paper feed roll transmission shaft through the fact that the transmission shaft has a transverse action through the hub of the ratchet, but when the ratchet is rotated the feather or key which extends into the spline of the shaft forms a means of turning the splined transmission shaft and the feed rolls with it. The means for operating the feed rolls from the type hammer re-setting device is a spring-pressed pawl pivotally mounted on the side of the C-shaped link of the type hammer re-setting device. The free end of this pawl engages the ratchet of the feed roll transmission in such a way that when the type hammer re-setting devise is operated the pawl will turn the ratchet of the feed roll transmission, causing the feed rolls to turn and the sheet paper to be moved vertically sufficient to allow the printing of the next numerical item as it is added, the units under the units, the tens under the tens, etc. As the pawl between the feed roll transmission ratchet and the hammer re-setting device is normally in contact with said ratchet and as said pawl acts to turn the ratchet in a direction that moves the front loop of the paper vertically upward, it may be understood that if it is desired to move the paper downward as is necessary in starting a new column of items, it will be necessary to throw the pawl out of action. The feed roll transmission ratchet may then turn in the opposite direction, allowing the feed rolls to be turned by the hand wheel on the end of the feed roll arbor located at the right hand end of carriage.

Deposition of Plaintiff's Witness, Joseph A. V. Turck.

I have previously stated in my answer that the movable paper guide in the carriage of the 1890 Machine forms a means of disengaging a pawl from a ratchet that would interfere with the re-setting of the sheet paper. In this statement I referred to the disengaging of the pawl I have described in the last paragraph. The means provided for throwing out the paper roll feed pawl through the lifting action of the movable paper guide is a lever with a long pivoted axis, the power arm and the work arm extending at right angles and from the ends of its pivotal axis. The axis of this lever is pivoted to the frame of the adding machine and has one of its arms in contact with the forward or movable edge of the movable paper guide. The other end of this lever contacts with the arm of another lever which is fastened to the side of the frame and in line with it, forming a compound leverage for the purpose of transmitting the action of the movable paper guide to a point where it may act upon the paper roll feed pawl to disengage it. I have already stated that in re-setting the sheet of paper prior to adding and printing a new column that it was necessary to throw the movable paper guide out of contact with the paper and that this was accomplished by one hand in the 1890 Machine. It may, therefore, be readily understood that by this one-hand operation that if the paper guide operates the lever for disengaging the feed roll pawl, that the one-hand operation performs four necessary functions—that of disengaging the movable paper guide, and the rubber buffer from the paper, and the paper feed roll pawl from the ratchet, and the turning of the feed rolls to shift the paper preparatory to printing the new column to be added.

I have already stated that in cross footing that in considering the means for operating the feed rolls that it was necessary to provide a device that could be thrown

Deposition of Plaintiff's Witness, Joseph A. V. Turck.

out of action. While I have already shown a device for throwing this mechanism out of action, it is only designed to disengage the paper feed roll pawl momentarily in the act of re-setting the paper. In cross footing it is necessary to hold the paper feed roll pawl out of action to prevent line spacing that would occur in a type hammer re-setting operation. In cross footing the items are printed laterally as they are added and as each item is added the type hammers have to be re-set. The means provided in the 1890 Machine is a spring friction device in the form of a flat spring fastened to the C-shaped link of the hammer re-setting device having its free end bent and so as to contact with the side of the paper feed roll pawl when said pawl is disengaged by hand and drawn across its path.

I have stated that it was necessary to provide a means for shifting the paper carriage laterally from left to right in the 1890 Machine and that it was obvious that such a device must be of a nature to locate and leave put the carriage. The 1890 Machine shows that this was accomplished by hand-operated device directly accessible with the hand of the operator while manipulating the keys in adding and printing. A lever mounted on a rod extending through the frame of the carriage having one arm extending along the side of the keys on the left hand side of the machine with a handknob on its end forms a means of leverage for operating the shifting device.

Recess.

Pivoted to a bracket on the left hand side of the frame of the machine and directly back of the carriage is a lever shaped so as to pass around the upright portion of the frame that supports the carriage. This lever, although having but one extension from its pivot, is so formed as to give the results of a lever of the first class, or what may be termed a bell crank lever, which has a power

Deposition of Plaintiff's Witness, Joseph A. V. Turck.

arm and a work arm. Pivoted to the work arm of this lever and engaging with the transverse notches, in the lower guide rod of the carriage is a spring-pressed pawl or dog. The spring which serves to keep this pawl or dog in engagement with the notches of the carriage guide rod also serves the purpose of keeping the lever in one direction and against a stop on the bracket it is pivoted to. The hand lever has a downwardly extending arm to which is pivoted a C-shaped link similar to that devised for the type hammer re-setting device. The other end of this C-shaped link is pivoted to the lever carrying the pawl or dog which engages with the notches in the carriage bar. When the hand knob of the operator is depressed the link connection serves to operate the power arm of the bell crank lever, forcing the pawl mounted on the work arm into engagement and against one of the notches in the carriage guide bar, forcing the guide bar and the carriage of which it forms a part laterally in its bearings in a direction from right to left. It may be readily understood that being a hand-operated device, it is subject to sudden and severe impulses, and on account of the ratchet-like movement of the pawl or dog which actuates the carriage the carriage is subject to overthrow. To prevent this it is necessary to provide a stop device. Such a device was provided for in the 1890 Machine by a swinging dog. Pivoted to and working in a slot in the C-shaped frame that supports the carriage. An arm extending downwardly from the pivotal point of the dog is slotted so that a pin fast in the side of the link of the hand-operated shift lever engages one side of said slot when in its normal position. A spring having one end fastened to the slotted arm and the other to the link of the shift lever serves as a means of keeping the arm against the pin and as a flexible operating means for the dog. The dog is shaped so that its swinging or free end may when swung forward on its pivot enter a notch in

Deposition of Plaintiff's Witness, Joseph A. V. Turck.

the bar of the carriage, thereby forming a stop when so engaged. This dog is so timed in relation to the operation of the shifting mechanism that when the carriage is moved to a position the dog does not immediately engage a notch, but as the movement of the carriage is finished and the notch comes opposite to the dog it is forced into the notch and forms the stop. The timing and action of the dog is accomplished through its spring connection with the link of the shifting device. The pin in the link acting as a stop and means for pulling the dog out of engagement with the rack or transverse notches in the carriage.

The use of sheet paper in a carriage that travels laterally with the type and type hammers of the 1890 Machine required guides. To protect the paper and keep it from being entangled with a frame that holds the type hammers and the type hammer mechanism it is necessary to attach a sheet metal shield so constructed as to form a guide and yet not interfere with the working of the type hammer mechanism. To provide guides against the entanglement with the type segments it was necessary to put ribs on the edges of the ink ribbon guides and make the loops each side of the type segments, through which the ribbon is threaded, oval on the side next to the paper. To guard against the entanglement of paper with the ribbon guides and type segments it was necessary to provide the guides shown as horn-like extensions from the ribbon guides. Such devices were not necessary in the "Roll Paper Comptograph," as there is no lateral movement in the paper and no re-setting of the paper to print side by side columns.

While I have endeavored to show what had to be done in devising a carriage, a support and operative means for it, it was still necessary to change and move many parts to clear the way for the lateral passage of the carriage, through such frame work and mechanism as is

Deposition of Plaintiff's Witness, Joseph A. V. Turck.

shown in the exhibit "Roll Paper Comptograph." On account of the movable paper guide of the carriage and the fixed guide above the paper roll, combined with the necessity of increasing the size of the paper feed rolls, it was necessary to remove the frame work of guides which allowed the threading of the strip paper around the under side of the roll in the exhibit "Roll Paper Comptograph." As part of this framework protected the ribbon from entanglement with the type segments as they were operated in adding and printing numerical items, it was necessary to devise and provide new guards. As these guards do not show in the drawings and they are so covered up between the type, it is hard to state just what their shape is and how they are held in position. It is evident, however, that they are in some way fastened to the frame in an entirely new position from that which they were fastened before, as the tie rods on which the old guards were mounted had to be removed to allow the passage of the carriage. It was also necessary to cut away the framework on each side of the machine. In the exhibit "Roll Paper Comptograph" the framework that formed a guide for threading the roll paper around under the roll formed a means of attachment for the springs acting as a retracting means to return the adding actuated segments to their normal position after an additive movement of the accumulator dials under impulses received from the key in adding and printing columns of numerical items.

Adjourned to 10 A. M. Tuesday morning, December 19, 1911.

CHICAGO, December 19, 1911.

Met pursuant to adjournment. Present as before.

(Witness continuing answer.)

As it required the space this spring occupied for the carriage to enable the feed rolls and guides to hold their

Deposition of Plaintiff's Witness, Joseph A. V. Turck.

proper position, it was necessary to provide new means of attaching the spring to the framework and the segment lever. As this spring performed a considerable function in the operation of the adding machine mechanism it was desirable that its quality of action should not be impaired. It was, therefore, necessary in the new attaching of the spring to the frame and lever, to use an unusual amount of care which would be beyond those who are not familiar with the fine art of adding machine mechanism of the type shown in both the "Roll Paper Comptograph" and that of the 1890 Machine. On account of the changing of the attachments the leverage pull of the spring had to be considerably greater, so that it was not merely a case of changing the attachments to suit the same spring, but the designing of a new spring so timed and of sufficient strength to perform the irregular work made necessary by the ever varying impulses of the levers received from their nine varying keys. In clearing the way for the carriage the link connections between the hand lever and the hammer re-setting arm had to be done away with and a new link devised, as I have already stated.

In the exhibit "Roll Paper Comptograph," acting directly upon the arbor of the main feed roll is what may be termed a brake or centering device to prevent overthrow and center the rolls for line spacing. This device was directly in the path of the carriage and had to be removed. Owing to the length of leverage and the space that it would require, it was more practical to mount this device on the framework than on the carriage which would be the nearest equivalent to the method shown in the exhibit "Roll Paper Comptograph." I have already stated that the feed roll transmission ratchet has mounted beside it on the sleeve a star wheel which rotates with the said ratchet. This star wheel and its connection

Deposition of Plaintiff's Witness, Joseph A. V. Turck.

with the feed roll transmission forms the centering means for the feed rolls in line spacing, while the brake and centering lever shown in the "Roll Paper Comptograph" is mounted on the carriage-supporting frame and contacts with the star wheel of the feed roll transmission in a similar way to the brake and centering lever shown in the "Roll Paper Comptograph." It is obvious to clear a way through the machine for the carriage that it was necessary to remove the feed roll mechanism, including operating devices for the feed roll, paper guides and guards. The case had to be changed and widened to allow the passage of the carriage and the installing of the carriage shifting device.

I note that in describing the carriage shifting mechanism and what was necessary to produce it that I omitted two adjustable friction devices mounted on the framework of the adding machine and bearing against the lower guide rod of the carriage. These two devices are mounted on the tie rod between the frame plates of the carriage so that by loosening and tightening the tie rod the quantity of friction desired may be obtained. Without these friction devices there is a possibility of the carriage being displaced during an adding and printing operation, or through the manipulation of the hammer re-setting devices during the operation of adding and printing columns of numerical items.

While I have endeavored to show by description the mechanism and the functions required to make the 1890 Machine, the mere description of mechanism and functions required does not show just what had to be done to produce a machine like that shown in the 1890 Machine from what is shown in the exhibit "Roll Paper Comptograph." To accomplish all that the 1890 Machine shows was desired, it was necessary to correlate all the new functions and their devices in the mind. It

Deposition of Plaintiff's Witness, Joseph A. V. Turck.

had to be a conception of the whole new mechanism combined with the old and the necessary changes to produce such a working machine as is shown in the 1890 Machine To my belief a production of the new mechanism shown in the 1890 Machine could only be correlated in the mind of an expert on the type of adding and listing machine shown in the exhibit "Roll Paper Comptograph."

Recess.

As to whether the "Silkman and Gathright patents would be of aid in changing the 'Roll Paper Comptograph' into a machine having the functions and purposes of Felt's 1890 Machine," I find that Gathright shows an auxiliary escapement device attached to a Remington typewriter having a similar function to the escapement device called the space bar, while the Silkman patent shows an electrically operated typewriter. Gathright shows a lever device for throwing the carriage escapement out of contact with the regular escapement pawl, and provides an adjustable stop to take the place of the one-step stopping action of the escapement pawl. Such a device could only be applicable to machines having spring operated or self feeding carriage operated by an escapement device, where the rack and escapement could be thrown out of engagement. As far as I can see, the function of the Gathright device is no different from that of the space bar on the typewriter other than it allows of a greater escapement, as immediately after a key is struck and a letter printed there would be a movement of the carriage in either case, whether the carriage has been set by the space bar or the Gathright device. I find nothing in the Gathright patent that discloses any of the functions shown in the new mechanism of the 1890 Machine. The Gathright patent shows no means for positioning the carriage to stay put during the adding and printing of a column of numerical items.

Deposition of Plaintiff's Witness, Joseph A. V. Turck.

The Gathright patent discloses no means for line spacing without the carriage movement each time a key is struck. The Gathright patent shows no means for holding the paper vertically as is necessary in the 1890 Machine. There are no devices shown in the Gathright patent for holding the walls of the paper together, as was made necessary in the 1890 Machine by the printing of a figure and a series of ciphers which could only be accomplished by a type hammer for each individual figure and cipher to be printed, and through the fact that the type were on one side of the paper, while the type hammers were located on the other side to make the impact between the paper and the type. In the Silkman patent I find a carriage mounted on a series of rolls supported by the bed or framework of the machine. Instead of being a self feeding or spring escapement actuated carriage the Silkman carriage is an electrically operated device with a spring operated return movement for re-setting the carriage preparatory to printing a new line of words. A means for line spacing and re-setting the carriage is operated by a pull lever which turns the feed roll and at the same time releases the carriage return escapement, allowing the carriage to be moved by its spring to the extreme right hand position preparatory to printing new lines. While the key and type mechanism is electrically operated, the function of these devices is the same as in other typewriting machines, viz., the printing of a letter or digit and a spacing movement of the carriage. The Silkman patent shows no means of positioning the carriage to stay put during the adding and printing of a column of numerical items. It shows no means of line spacing without a carriage movement. It shows no means of holding the paper vertically in a closed loop as it is held in the 1890 Machine by the paper guides and guards, and, as in the Gathright patent, without the paper being

Deposition of Plaintiff's Witness, Joseph A. V. Turck.

held in a loop there would be no means of holding the paper between the type and type hammers as in the 1890 Machine. I fail to find in either the Silkman or Gathright patents anything that would allow of the printing of a series of columns of digital items or numbers so as their denominational digits will be in perfect alignment vertically, the units under the units, tens under the tens, etc., during the operation of adding the said columns of numerical items. I cannot even find a combination of any of the devices shown in the Silkman or Gathright patents that would produce such a result.

Adjourned to 10 A. M. Wednesday morning, December 20, 1911.

CHICAGO, December 20, 1911.

Met pursuant to adjournment. Present as before.

(Witness continuing answer.)

The Gathright and Silkman patents disclose nothing that would help to devise means for holding a sheet of paper in a closed loop that would enable the printing to take place as it does in the 1890 Machine, to add and print several parallel columns of numerical items. They disclose nothing that would help in devising a carriage that would pass through the mechanism as is shown in the 1890 Machine. They disclose nothing that would help to devise the special paper guides and guards that perform a necessary function in the 1890 Machine. They disclose nothing that would assist in devising means for shifting and positioning the carriage for adding and printing several parallel columns of numerical items with their denominational digits in perfect alignment as is shown in the 1890 Machine. In the Silkman and Gathright patents both devices were designed to line space and shift the carriage at the same time. In the Silkman patent it was impossible to line space without shifting the carriage clear to the right as the device which did

Deposition of Plaintiff's Witness, Joseph A. V. Turck.

the shifting or releasing of the carriage so it would be returned to the extreme right hand position automatically line spaced at the same time. In the Gathright patent the lever or handle that is used to shift the carriage to the right when it is desired to print a new line automatically line spaces at the same time. Therefore, like all typewriters, they disclose no such function as line spacing without displacing the carriage, which is one of the most essential functions of the 1890 Machine owing to the necessity of adding and printing several parallel columns of numerical items with their denominational digits in perfect alignment.

In the Gathright and Silkman patents, as in all typewriting machines, but a single type is presented to the face of the paper at a time, requiring a movement of the carriage which holds the paper in order that the next impression may be made, as the impression of the type is always in the same relative position. Again, the line spacing has to do with the capacity of the paper and not the vertical alignment desired in printing columns of numerical items. By the capacity of the paper I mean that in the use of the typewriter when a line has been written across the paper it is the width of the paper which determines when the next line spacing should take place. I, therefore, fail to see anything in either of these functions that is suggestive of the requirements in the 1890 Machine, or that if used could possibly accomplish the result shown in said machine.

As an inventor familiar with the art of adding and listing machines, I fail to see where any knowledge of devices in typewriters would lead to the conception and design of mechanism like that shown in the 1890 Machine. The only function shown that might be of use is a carriage moving on a track which discloses no more than a railroad hand car moving on rails, as the feed

Deposition of Plaintiff's Witness, Joseph A. V. Turck.

rolls of a typewriter carriage and their operating devices are useless and would leave nothing but the carriage and track. From my own experience and with the Silkman and Gathright patents before me, I believe it would require a high order of invention to make the exhibit "Roll Paper Comptograph" add and print several columns of numerical items on a wide sheet of paper.

"Counsel for plaintiff offers in evidence a patent office copy of the patent to Felt No. 960,528, to be marked as Plaintiff's Exhibit 'Felt Comptometer patent 960,-528'; and also offers in evidence the two Turck patents Nos. 679,348 and 720,086, referred to in the answer to Q. 7 of the deposition of J. A. Turck, to be marked respectively Plaintiff's Exhibit 'Turck Mechanical Accountant patent No. 679,348' and Plaintiff's Exhibit 'Turck Mechanical Accountant No. 720,086.'

"Counsel for defendant objects to the foregoing deposition on the grounds of lack of qualification of the witness regarding subject matter testified to and also on the ground that it is secondary and not the best evidence in view of the fact that the inventor-patentee Felt has testified concerning these points discussed by the above witness."

(Signed) JOSEPH A. V. TURCK.

STATE OF ILLINOIS, }
COUNTY OF COOK, } ss.

I, H. M. MUNDAY, a notary public within and for the County of Cook and State of Illinois, do hereby certify that the foregoing deposition of Joseph A. V. Turck, was taken on behalf of the Comptograph Company in pursuance of agreed notice, before me, Suite 907, Marquette Building, No. 204 Dearborn Street in the City of Chicago, in said county on the 14th, 15th, 16th, 18th, 19th, and 20th days of December, 1911; that said witness was by me duly sworn before the commencement of his tes-

Deposition of Plaintiff's Witness, Joseph A. V. Turck.

timony; that the testimony of said witness was typewritten by a typewriter operator, in my presence; that said testimony was commenced at ten o'clock in the morning of said 14th day of December, 1911, and was continued to adjournment on the 15th, 16th, 18th, 19th and was concluded on the 20th day of said month; that the deposition was read to said witness, before the witness signed the same; that I am not connected by blood, or marriage with either of said parties, nor interested directly or indirectly in the matter in controversy.

IN TESTIMONY WHEREOF, I have hereunto set my hand and affixed my notarial seal of office at Chicago, in said county, this 20th day of December, 1911.

H. M. MUNDAY, [SEAL.]
Notary Public.

Plaintiff's Proofs Stipulated in from Burroughs Case.

IN THE CIRCUIT COURT OF THE UNITED STATES, NORTHERN DISTRICT OF ILLINOIS, EASTERN DIVISION.

Comptograph Company,
Complainant,
vs.
Burroughs Adding Machine Company,
Defendant.
} In Equity. No. 28,782.

Testimony on behalf of the complainant, taken under the stipulation herein, before H. M. Munday, notary public, and pursuant to the annexed notice at No. 907 Marquette Building, Chicago, Illinois, beginning at ten o'clock in the forenoon on Tuesday, November 26, 1907.

Present on behalf of the complainant, John W. Munday, Esq., and on behalf of the defendant, Edward Rector, Esq.

(Third) Deposition of Plaintiff's Witness Harry B. Wyeth, stipulated in from Burroughs case.

And thereupon HARRY B. WYETH, a witness on behalf of the complainant, was produced, and being first duly sworn, testified as follows:

Direct Examination by Mr. Munday.

Q. 1. What is your name, age, residence and occupation?

A. Harry B. Wyeth; 39 years of age; Evanston, Ill. General manager of the Comptograph Company.

Mr. Rector, counsel for defendants, now appearing, enters the following objection:

By Mr. RECTOR: If complainant contemplates in-

troducing proofs at this time upon the issues raised by defendant's plea, I consider such proofs out of order and therefore object to the same for that reason. I have no objection, however, to the introduction of such proofs at this time provided it be without prejudice to the defendant's right to hereafter introduce proofs both in answer to complainant's proofs now taken and in affirmative support of defendant's plea.

(Third) Deposition of Plaintiff's Witness Harry B. Wyeth, stipulated in from Burroughs case.

By Mr. MUNDAY: I expect to prove by Mr. Wyeth the execution of the license agreement which you have attached to the plea as "Exhibit A." And I expect to prove by him the fact of payment by the licensee of royalties thereunder. And I expect to prove other things.

Q. 2. Do you know the defendant, the Burroughs Adding Machine Company, and did you know its predecessor in business, the American Arithmometer Company?

A. Yes.

Q. 3. Attached to the defendant's plea herein, as "Exhibit A," is what purports to be a copy of a license agreement between the Comptograph Company on the one hand, and the American Arithmometer Company on the other hand. Have you the original of that agreement?

A. I have.

Q. 4. Will you please state whether or not Exhibit A is a true copy thereof?

A. I have compared it and it seems to be.

Q. 5. Do you know personally, of your own knowledge, that the instrument in question was signed and executed by the Comptograph Company and the Arithmometer Company and ratified and confirmed by Dorr E. Felt and Tarrant Manufacturing Company in the manner and at the time it purports to be, in said Exhibit A?

A. It was signed by Mr. Tarrant, president of the Comptograph Company in my presence. It is signed by me personally as secretary of that company. It bears

(Third) Deposition of Plaintiff's Witness Harry B. Wyeth, stipulated in from Burroughs case.

the signature of Joseph Boyer, president, and B. G. Chapman, secretary, and the seal of the American Arithmometer Company. I am familiar with both signatures and seals and believe them to be original. I am also familiar with the signatures of D. E. Felt and C. J. De Berard, who have signed on behalf of the Felt & Tarrant Manufacturing Company and believe them to be genuine.

By Mr. MUNDAY: On behalf of the Comptograph Company, the complainant, it is here admitted that the Exhibit A attached to the plea herein, is a correct copy of the instrument which it purports to set forth.

Q. 6. The plea herein avers that the American Arithmometer Company made all payments due under said license to the complainant up to the time of its assignment and transfer to the defendant, Burroughs Adding Machine Company. Is that true?

A. It is.

Q. 7. Did you understand, as the manager of the Comptograph Company, that the American Arithmometer Company had assigned its interest in said license to the Burroughs Adding Machine Company, and did the Comptograph Company acquiesce in that assignment?

A. Yes.

Q. 8. It is alleged in the plea taken that, taken together, the American Arithmometer Company and Burroughs Adding Machine Company have paid as royalties the sum of five thousand dollars added to seven thousand two hundred and nine dollars, making a total of twelve thousand two hundred and nine dollars ($12,209.00). Is it true that they paid that money as royalties?

A. It is.

Q. 9. Did they pay any more royalty than that?

A. No.

By Mr. MUNDAY: It will not be claimed on behalf of the complainant, the Comptograph Company, that

(Third) Deposition of Plaintiff's Witness Harry B. Wyeth, stipulated in from Burroughs case.

the Burroughs Adding Machine Company, defendant, has made or sold any machines that embody the subject-matter of any of the claims of the Felt patent, No. 628,176 in suit, excepting the claims, or some of them, named in the plea as being claims under which the Burroughs Adding Machine Company is licensed by the license agreement "Exhibit A."

Q. 10. Do you know and can you state whether the Comptograph Company at all times since the execution of the license agreement, Exhibit A, has in good faith lived up to said agreement, and performed all parts of the contract?

By Mr. Rector: The questions is objected to as calling for a conclusion and a mere expression of opinion on the part of the witness.

A. I am thoroughly familiar with all the terms of such contract and have had full charge of the efforts of the Comptograph Company to carry out such contract, and every provision of same has been fully lived up to by the Comptograph Company.

Q. 11. Paragraph 3 of said contract provides that the Comptograph Company shall promptly bring suit upon said Felt patent against existing and future infringers and diligently and vigorously prosecute such suit or suits to a final determination. What did the Comptograph Company do in fulfillment of this part of the contract?

A. It immediately brought suit against the Universal Adding Machine Company of St. Louis, which was at the time of the bringing of the suit practically the only infringer. It prosecuted such suit as vigorously as the law would permit to a final determination. At the conclusion of that suit, it brought suit against the Adder Machine Company, and is now prosecuting such suit.

Q. 12. Do you know the directors and officers of the Wales Adder Machine Company?

By Mr. Rector: Objected to as irrelevant and im-

(Third) Deposition of Plaintiff's Witness Harry B. Wyeth, stipulated in from Burroughs case.

material and apparently calling for secondary evidence.

A. I at least know some of them. I believe there are nine altogether. I do not know that I can call the names of them all or that I have met them all personally, but I know in a general way who they are.

Q. 13. Please state the names of the directors, so far as you know those names?

By Mr. Rector: The question is objected to for the same reasons as that noted to the preceding questions, and for the further reason that prior to asking the witness the preceding question, complainant's counsel handed the witness, and the latter now holds in his hands, what apparently purports to be some list of the alleged officers and directors of the company in question, so that the witness is manifestly not being called upon to testify from his personal knowledge and memory.

A. I understand the question to be as to the directors of the Adder Machine Company that I know personally. I know Mr. Nesbit, Mr. Boyer, Mr. Macauley, Mr. Rector, and I think I have also met, although I am not entirely certain on this point, another director, a Mr. Lauver.

Q. 14. Have you looked at the list which I handed to you just now since I handed it to you?

A. Yes. I glanced at same to see if I knew personally any of the other gentlemen named therein.

Q. 15. What is that list?

A. It seems to be upon an advertising page of the Van Norden Magazine and is an advertisement of the Wales Visible Adding and Listing Machine manufactured by the Adder Machine Company, Wilkes-Barre, Pa., and gives the names of the officers and directors of that company.

Q. 16. Among the list of directors named here, is the following:

(Third) Deposition of Plaintiff's Witness Harry B. Wyeth, stipulated in from Burroughs case.

"Joseph Boyer, President, Burroughs Adding Machine Company, Detroit, Mich.

Alvan Macauley, General Manager Burroughs Adding Machine Co., Detroit, Mich.

Edward Rector, Attorney, Burroughs Adding Machine Co., Chicago, Ill.

A. J. Lauver, Detroit, Mich."

Do you know whether or not the above named Joseph Boyer, is the president of the Burroughs Adding Machine Co., Alvan Macauley is general manager of the Burroughs Adding Machine Co., and Edward Rector is attorney of the Burroughs Adding Machine Co.?

By Mr. RECTOR: The question is objected to as irrelevant and immaterial.

A. I do know that they are.

Q. 17. And is the said A. J. Lauver one of the directors of the Burroughs Adding Machine Company; and if not, what relation does he bear to said Burroughs Company?

By Mr. RECTOR: Same objection as to preceding question.

A. He is not a director of the Burroughs Company, but I believe is in their employ at Detroit.

Q. 18. The Adder Machine Company referred to in this advertisement is engaged in what business?

By Mr. RECTOR: Same objection as to preceding question.

A. The manufacture and sale of adding and listing machines.

Q. 19. The picture in the advertisement to which you have referred shows what?

By Mr. RECTOR: Same objection.

A. A Wales Adding Machine.

Q. 20. This is the same machine concerning which we have been taking testimony very recently here in this office under the suit against the Wales Adding Machine

(Third) Deposition of Plaintiff's Witness Harry B. Wyeth, stipulated in from Burroughs case.

Company for an infringement of claims 1, 2 and 4 of the letters patent to Felt No. 628,176, is it not?

By Mr. RECTOR: The question is objected to as irrelevant and immaterial and as calling for secondary evidence.

A. It is.

Q. 21. One of the machines here on the table, is, is it not, an exhibit in that cause?

By Mr. RECTOR: Same objection as to the preceding question.

A. It is.

Q. 22. That Wales machine, does it contain the subject-matter of claims 1, 2 and 4 of said Felt patent?

By Mr. RECTOR: Question is objected to as irrelevant and immaterial, as calling for a mere expression of opinion and conclusion from a witness who has not been shown qualified to express such opinion and conclusion, and for the further reason that in the absence of any exhibit of the machine inquired about or any evidence as to its construction and operation, the question calls for secondary evidence.

A. It does.

Q. 23. Please state whether or not the Wales Machine made by the Adder Machine Company employs a transversely-movable wide-frame paper-carriage?

By Mr. RECTOR: Question is objected to as irrelevant and immaterial and as calling for secondary evidence.

A. It does.

By Mr. MUNDAY: The advertisement referred to by the witness is here offered in evidence on behalf of the complainant, to be marked "Complainant's Exhibit Adder Machine Company's advertisement."

By Mr. RECTOR: The introduction in evidence of the paper in question is objected to as irrelevant and immaterial and for lack of proof as to its authenticity and identity.

By Mr. MUNDAY: It is only fair to point out that

(Third) Deposition of Plaintiff's Witness Harry Wyeth, stipulated in from Burroughs case.

we shall contend that the confederating of the officers of the Burroughs Adding Machine Company with and their presence on the board of directors of a company that is engaged in the business of the manufacture of a machine that infringes upon the claims of the Felt patent that are included in the license agreement set up by the plea herewith, is an act inconsistent with the pretense on the part of the Burroughs Company that it is and continues to be a licensee under said patent.

Q. 24. You spoke about a suit that was brought in pursuance of the Comptograph Company's license agreement by that company against the Universal Adding Machine Company impleaded as Universal Accountant Machine Company, and which you say was diligently prosecuted. That suit was brought in this district in the United States Circuit Court at Chicago, was it not?

A. It was.

Q. 25. It was argued at final hearing before his Honor, Judge Kohlsaat, in May, 1905, and decided by him in favor of the complainant on the 24th day of January, 1906, was it not?

A. Yes.

Q. 26. Thereupon the defendant in that case prayed an appeal to the United States Circuit Court of Appeals for this Seventh Circuit. Is that true?

A. It is.

Q. 27. What action, if any, did the Burroughs Adding Machine Company take concerning this appeal?

A. Before the hearing in the Court of Appeals, if I recall the matter, we were served with notice by Mr. Rector, the counsel for the Burroughs Adding Machine Company, that he intended to appear in court and ask leave to file a brief in the case on behalf of the Burroughs Company. At that time we considered the case against the Universal Company in a shape that was very satisfactory to us, and since we had a decision in our

(Third) Deposition of Plaintiff's Witness Harry B. Wyeth, stipulated in from Burroughs case.

favor in the lower court and were entirely satisfied with the way matters stood, we could see nothing to be gained by Mr. Rector's filing a brief in our favor. We held a consultation with our attorneys in the matter and our attorneys advised us quite definitely that while they considered there were no legal questions that could be raised by Mr. Rector that would be seriously to our disadvantage, yet they felt that it would be a great mistake for for him to file a brief. They felt that inasmuch as the Burroughs Company were our licensees, any statement of facts by the Burroughs Company in a brief would be taken as coming from us and would therefore be given undue weight and probably looked upon as more or less of a true statement of facts. We felt that while the Burroughs Company, through Mr. Rector, had been conversant with the case all along, and while we had always been glad to give them any information that they wanted, and they therefore might be said to have had full access to the facts, yet we were not altogether certain as to just how much they did know of the facts, and feared what afterwards proved to be well founded, that this would result in the presentation by them of a distorted statement to which the court would attach undue weight by reason of its being, as mentioned above, an utterance, so to speak, from within our camp. With this advice so definitely from our attorney, we considered the wise thing for us to do was to endeavor to dissuade the Burroughs Company from what to us was an act of treachery. We therefore arranged that Mr. Munday and Mr. Clarke, our attorneys, should go to see Mr. Rector, talk the matter over with him and show him how we regarded their suggestion. Our attorneys went to see Mr. Rector and reported to us on their return that they had failed of success. They stated that Mr. Rector apparently was determined to file the brief and that he paid no attention to

(Third) Deposition of Plaintiff's Witness Harry B. Wyeth, stipulated in from Burroughs case.

our protest, considering, if I recall the expression aright, that we were simply protesting because we thought we had the milk in the bucket and were afraid the Burroughs Company would kick over the pail.

Mr. Rector duly appeared in court and while we protested vigorously against his obtaining permission to file the brief, yet the court finally granted same. The brief was finally filed and proved to be all that we had feared in its mis-statements. The situation with reference to the case at that time was quite peculiar, since the defendants had made, after the testimony was all in, a defense of abandonment, by an amended answer. This defense we did not attach serious weight to because we considered that abandonment had to be proved by them, and inasmuch as we felt the burden of proof was on them and they had offered no serious proof of abandonment, we did not feel that we wanted to reopen the case to put in evidence what we knew to be the real facts. It was with reference to these facts that we feared a brief from our licensee, and the result justified our fears, since apparently, the Court of Appeals in its final decision was materially influenced by the mis-statements of facts that were made in the brief by the Burroughs Company.

By Mr. Rector: All of the answer except the portion thereof which relates directly to the notice of application for leave of court to file a brief on behalf of the Burroughs Company, the subsequent application to the court for that leave, and the subsequent filing of the brief, is objected to as irresponsive to the question. The portion of the answer relating to consultation between the witness and complainant's counsel respecting such notice of application for leave to file the brief is objected to as irrelevant and immaterial. And that portion of the answer relating to the alleged report of complainant's counsel concerning what occurred at the interview with Mr. Rector is objected to as hearsay.

(Third) Deposition of Plaintiff's Witness Harry B. Wyeth, stipulated in from Burroughs case.

Q. 28. What information have you outside of the advertisement of the Adder Machine Company as to what members of the Burroughs Adding Machine Company are directors of said Adding Machine Co., and from whom did you otbain that information, if any?

By Mr. Rector: The question is objected to as irrelevant and immaterial and as calling for secondary evidence.

A. I have been told by at least two of the gentlemen I mentioned that they were directors in the Adder Machine Company, and have also been told what other persons connected with the Burroughs Company were directors in the Adder Machine Company.

By Mr. Rector: The answer is objected to as hearsay.

Q. 29. Do you mean that you were told by the Burroughs Adding Machine Company, or by some officer of that company, that the gentleman named in the advertisement, as officers of the Burroughs Adding Machine Co., are directors of the said Adder Machine Company?

By Mr. Rector: Question is objected to as irrelevant and immaterial and leading and as calling for hearsay evidence.

A. I do. Mr. Boyer, President of the Burroughs Company, made the statement I refer to to me, and I believe that the same statement was also made to me by Mr. Rector.

Q. 30. You stated that Mr. Rector obtained leave to file and did file in the United States Circuit Court of Appeals in a certain cause which your Company, the Comptograph Company, had brought in pursuance to the license agreement a brief on behalf of the Burroughs Adding Machine Company. Have you a copy of that brief?

A. I have and herewith produce same.

(Third) Deposition of Plaintiff's Witness Harry B. Wyeth, stipulated in from Burroughs case.

By Mr. MUNDAY: The pamphlet produced by the witness is here offered in evidence on behalf of the complainant, the same to be marked "Complainant's Exhibit, Rector's Brief."

By Mr. RECTOR: The Exhibit in question is objected to as irrelevant and immaterial.

Q. 31. I believe you stated that this brief contains misrepresentations of the actual facts. Will you point out some of those misrepresentations of the actual facts?

A. On page 10, of the Brief, the second sentence of the second paragraph states: "The machine appears to have been put aside soon after Felt's return to Chicago and nothing more ever done with it." As a matter of fact, we knew that Mr. Felt had shown and used and worked upon and with this machine systematically and almost constantly from the time of his return referred to until the filing of his application for patent.

On page 11 the statement is made that:

> "This alarm device was manifestly not placed on any other machine, so that so far as we are concerned with it here it was clearly nothing but an abandoned experiment."

As a matter of fact the alarm device is shown in the patent at issue.

Further down on the same page appears a statement with reference to the several things that Felt did to develop and improve his invention before he applied for a patent to the effect that:

> "With a single exception no one of them is employed in either the Defendant's machine or the Burroughs."

There were five things referred to as having been done by Mr. Felt, and of these five four are used in both the "Defendant's machine" and the "Burroughs" either as directly devised by Mr. Felt or for accomplishing the same purpose.

(Third) Deposition of Plaintiff's Witness Harry B. Wyeth, stipulated in from Burroughs case.

Further down on the same page again appears a statement to the effect that:

"Felt did nothing more with his old 1890 Model," which is substantially the same misstatement of fact that I referred to above.

On page 12 appears the statement that:

> "The purpose of thus withholding the true state of facts respecting his invention was to avoid a rejection of his claims on the ground of abandonment."

This refers to the statement made in an affidavit by Felt at the time of his application for patent to the effect that

> "He had made the invention many months prior to Pike's filing date."

As a matter of fact, neither Mr. Felt nor his attorney had any thought of abandonment in their minds when they made the statement in the affidavit, but made the statement in the form that it was because in their judgment it was the proper way to make it in order to avoid disclosing facts in a patent application that they might atferwards desire to keep secret.

> By Mr. Rector: I should like to inquire whether the witness, in controverting the statements of the brief to which he has referred, and stating what the actual facts were, is testifying from his own personal knowledge of those facts. I am informed and believe that the witness had no connection whatever with the Complainant Company or with Mr. Felt or any personal knowledge whatsoever concerning Mr. Felt's invention until after the issue of the patent which is here in suit. If that be true, he manifestly has no personal knowledge concerning facts about which he is now assuming to testify.

On page 16 is again made the statement in substantially the same form that I have twice quoted it, that (referring to the 1890 model):

> "Felt brought it back to Chicago and put it aside and did nothing more with it."

(Third) Deposition of Plaintiff's Witness Harry B. Wyeth, stipulated in from Burroughs case.

As I have stated, this is an entirely gratuitous misstatement of fact.

By Mr. RECTOR: I desire to note upon the record the fact that at the conclusion of the inquiry and statement which I placed upon the record immediately before the last paragraph of the witness' answer, complainant's counsel directed the witness to proceed with his answer and to disregard the inquiry and statement. I therefore at this point enter objection to all the foregoing portion of the answer of the witness as hearsay evidence, and desire that such objection may stand and apply without further repetition to any further testimony of the witness in continuance of his present answer which may relate to facts concerning which he admittedly has no personal knowledge.

By Mr. MUNDAY: Proceed with the answer.

On page 17 appears the statement:

"He apparently lost interest in the old model and everything in it."

A few lines farther down on the same page appears the further statement:

"He apparently did not consider anything embodied in the old model to be worth the trouble and expense of an application."

Still farther down on the same page appears the statement that:

"He had completely abandoned the old 1890 model and everything contained in it, and had no thought of making any use of them or of applying for a patent on them until after the appearance of the Pike machine upon the market and the issue of the Pike patent in December, 1897. After these appeared the eight year old model was resurrected."

On page 18 appears the statement:

"He simply abandoned the whole enterprise; and apparently having no thought at the time that wide paper carriage machines would be useful for other lines of work, he did not think it worth while to waste any more time on them and never built one or

(Third) Deposition of Plaintiff's Witness Harry B. Wyeth, stipulated in from Burroughs case.

> experimented upon one again for nearly ten years after the failure of his 1890 machine."

All of these statements I have last mentioned are covered by the same description I have given before, namely, gratuitous misstatments of facts, the truth of which facts was well known to all of those connected with the prosecution of the case of the Comptograph Company against the Universal Company, and the truth of which should have been known to the counsel for the Burroughs Company at the time he wrote the brief.

On page 20 appears a statement which, while it cannot perhaps be called an actual misstatement of fact, is yet grossly misleading and calculated to give a very false impression to the mind of the court when coming from one supposedly familiar with all the facts of our case. I refer to the paragraph with reference to the statement of Mr. Wyeth as to when

> "he actually received the first broad frame machine from the Burroughs Company."

The brief says:

> "His counsel did not ask him, and he did not say what knowledge he had of the Pike machines prior to that time; and he was not cross-examined upon the subject."

The inference being that if Mr. Wyeth had been asked or he had been cross-examined, the knowledge elicited would have been detrimental to the cause of the complainant.

On page 41 appears the statement that:

> "Felt's invention was just as completely concealed from the public from the time he put aside his own model after its return from the Census Office in February, 1890, until his patent was applied for in 1898, or indeed until it was issued in 1899, as if he had in fact secreted or hidden it."

All of those concerned with prosecuting the Comptograph case knew that Mr. Felt's machine had never been con-

(Third) Deposition of Plaintiff's Witness Harry B. Wyeth, stipulated in from Burroughs case.

cealed or hidden, but had been as a matter of fact constantly exhibited and used in a number of different ways during the period referred to.

On page 60 appears the statement that:

> "There is no pretense or claim that the Felt 1890 model was ever used for any practical business purposes."

The same statement I have made several times previously applies to this also, that the facts as they were well known to all concerned were entirely at variance with this statement.

Pages 63 to 71 inclusive are almost entirely given up to a discussion of the five different things upon which Mr. Felt worked upon before applying for his patent and to a discussion of Mr. Felt's delay in making this application. The discussion referred to is based upon the same things that I have pointed out above, and which may be summarized as a complete misstatement of facts that were thoroughly well known to all of those concerned in the Comptograph Company case.

I have pointed out a few of the misstatements in the Brief of the Burroughs Company that I have noticed. I have not attempted to find them all nor have I tried to elaborate upon those that I have found.

> By Mr. Rector: The entire answer of the witness is objected to as irrelevant and immaterial, and it not appearing that the witness had any personal knowledge of the facts concerning which he has assumed to testify, the answer is further objected to for that reason.

Q. 32. What did the Comptograph Company do concerning this Brief of Mr. Rector's, with reference to the license, after you had seen the Brief?

A. They considered that the filing of this brief by the Burroughs Company was a gross act of treachery on the part of the Burroughs Company, and that such act

(Third) Deposition of Plaintiff's Witness Harry B. Wyeth, stipulated in from Burroughs case.

had absolutely revoked the license previously granted to the Burronghs Company. They instructed their counsel to notify the Burroughs Company in unmistakable terms in the reply which they made to the Burroughs Brief that the Comptograph Company considered the license revoked.

Q. 33. Have yon a copy of the reply brief filed by your counsel, and to which you refer in your last answer?

A. I have and herewith produce same.

Q. 34. And did the Brief in reply notify the Burroughs Company of the breach of contract committed by it and of the consequent abrogation of the license? And if so, please point out in the Brief the pages and matter therein constituting such notice.

By Mr. Munday: The copy of the Brief produced by the witness, being the Comptograph Company's answer to the Brief of the Burroughs Adding Machine Company, is offered in evidence on behalf of the complainant, to be marked "Complainant's Exhibit Reply Brief."

By Mr. Rector: Question is objected to as irrelevant and immaterial and the introduction in evidence of the Exhibit in question is objected to for the same reason.

A. The Brief did make such notification. On page 1 of the Brief I find a statement that the Burroughs Adding Machine Company

> "has committed a gross breach of contract as well as done an act of treacherous bad faith."

On page 5 I find a further statement that

> "The Burroughs Company has broken the license contract, and it will have to suffer the consequences, —for it is now nothing more or less than an infringer of this patent."

On page 43 I find the statement that:

> "It is obviously the rankest bad faith and breach of contract for the licensee to in any manner intervene in such a suit and itself assail or even question

(Third) Deposition of Plaintiff's Witness Harry B. Wyeth, stipulated in from Burroughs case.

the validity of its licensor's title,—to say nothing of the equally rank and odious breach of contract involved in attempting to prevent us from carrying out our express undertaking to protect our patent against third parties and prosecute them for infringements."

Q. 35. Was this Brief, "Complainant's Exhibit Reply Brief," filed in court and copies of the same sent to Mr. Rector?

By Mr. Rector: Objected to as irrelevant and immaterial.

A. Yes.

Q. 36. Was this before the hearing in the Court of Appeals?

By Mr. Rector: Same objection.

A. It was.

Q. 37. The hearing before the Court of Appeals was in April or May, 1896, was it not?

A. It was about that time.

Q. 38. The Circuit Court of Appeals, about August 11, 1906, I believe, rendered its decision and filed its opinion. Have you a copy of that opinion?

A. I have and herewith produce same.

By Mr. Munday: The copy of the opinion produced by the witness is herewith copied into the record *in extenso* for convenience. The opinion reads as follows:

Opinion.

"The claims relied upon are generic. If sustained they would exclude any other adding machine from using a lateral movement produced by the pressing of a key. The contention is that Felt was a pioneer in this particular improvement, and is entitled therefore not only to the broad claims set forth, but to the allowance of time said to have been necessarily taken—about eight years—to bring the improvement to perfection.

(Third) Deposition of Plaintiff's Witness Harry B. Wyeth, stipulated in from Burroughs case.

"The patent was applied for May 31, 1898, and allowed July 4, 1899. Admittedly the adding machine, tabulating figures in single columns, was at that time in full use. The improvement was intended merely to embody the tabulations in parallel columns, thus introducing greater compactness, and greater convenience in the sheets containing the tabulated figures.

"It turns out, however, that at the time the Felt patent was applied for and allowed, there was another patent in existence—No. 580,863, applied for September 16, 1896, and issued April 20, 1897, to Hiett and Cable; this earlier patent disclosing descriptively, though not claiming generically, all that is contained in claims one, two and four of the Felt patent in suit. Indeed, Felt's only escape from the Hiett patent, as an anticipating device, lies in the claim that though the Felt patent was not applied for until 1898, the idea was conceived and put into progress of mechanical development in 1889 and 1890—a conception and mechanical embodiment that at that early date was entirely practical and operative, and only needed certain accessories to make it commercially a success.

"These accessories are reduced in argument to five in number: (1) That though the machine of 1890 produced parallel columns adding the numbers, it had no automatic mechanism for printing the answers; the perfected machine of 1898, and the Hiett machine contains such a mechanism. (2) The machine of 1890 was so constructed that the operator was liable to feed the paper clear out of the machine at the bottom of a column, and thus lose his work; the perfected machine of 1898, as well as the Hiett machine, embodied means for preventing this. (3) That although the machine of 1890 printed ciphers automatically, it required to print the ciphers that the keys be touched in certain order; the perfected machine of 1898, as also the Hiett machine, print the ciphers auto-

matically, in whatever order the keys are touched. (4) The machine of 1890 was a key driven machine; the perfected machine of 1898, as also the Hiett machine, being a lever driven machine; that is to say the lateral motion in the machine of 1890 was produced by pressing hard upon a key, while in the latter machines the depression of the key does none of that work, but merely sets the mechanism so that all of the work is done afterwards by the hand lever. (5) The machine of 1890, although it contained means for turning the sheet of paper back by hand, did not contain an automatic mechanism for performing this operation; the perfected machine, as also the Hiett machine, contains such automatic mechanism. And the argument of the patentee is, that though it took eight years to develop and perfect these accessories, all things considered the time was not too long, and the patentee ought not, either through the doctrine of laches or abandonment, to be thereby barred from claiming the date of his invention to have been 1890, while its commercial perfection did not take place until 1898, the date of his application for the patent.

(Third) Deposition of Plaintiff's Witness Harry B. Wyeth, stipulated in from Burroughs case.

"A study of the development, and the appearance in the art, of these accessories fails to sustain the equity of appellee's claim. The first one pointed out was employed in the Felt patent No. 465,255, issued December 15, 1891, as also the earlier Burroughs patent; and the fourth and fifth seem to have been clearly pointed out in Felt's invention No. 568,021, applied for June 14, 1895. And respecting none of them is there any evidence in the record showing when they were conceived, or when they were perfected. For anything the record shows, all of these accessories could have been added more than two years prior to the application for the patent. And the significance of this silence is emphasized by the fact that though the Hiett patent admittedly em-

(Third) Deposition of Plaintiff's Witness Harry B. Wyeth, stipulated in from Burroughs case.

"CHICAGO, U. S. A.

Burroughs Adding Machine Company,
Detroit, Mich.

GENTLEMEN:—

You will please take notice that the Comptograph Company chooses to consider the license agreement or contract entered into between the said Comptograph Company and the American Arithmometer Company, now known as the Burroughs Adding Machine Company, was rendered void by the conduct of the said Burroughs Adding Machine Company in committing a breach of the contract by aiding and abetting the defense in court of the Universal Adding Machine Company, impleaded as the Universal Accountant Machine Company in the United States Circuit Court of Appeals for the Seventh Circuit at Chicago. You employed counsel—Mr. Edward Rector—to file and he filed a brief and argument in said Court of Appeals opposing the affirmance of the decree of the court below which had sustained the validity of the Felt patent No. 628,176, and had held the machine of the defendant therein to be an infringement. This litigation in the United States Circuit Court and the said Court of Appeals was undertaken by the Comptograph Company in pursuance of the aforesaid license agreement or contract and for the benefit of all of the parties to said contract. While the Comptograph Company was thus in good faith making its best endeavors to carrying out the provisions of the contract, you thus, by the filing of Mr. Edward Rector's brief and argument, did your best to defeat the said Felt patent and to prevent the carrying out of the Comptograph Company's undertaking under said contract. This we believed and we believe to be a gross breach of the contract on your part, and we elected to consider and do consider the contract for that reason abrogated. We had our counsel notify you in the brief

(Third) Deposition of Plaintiff's Witness Harry B. Wyeth, stipulated in from Burroughs case.

filed in reply to Mr. Rector's brief, that we considered that you had forfeited all rights under the contract by your conduct. We send you the present further notice now only that you may understand that recent developments in the adding machine controversy have not in any way modified or changed our views of your conduct or our attitude with respect thereto.

You will further please take notice that we still shall maintain the said Felt patent as a good, valid and subsisting patent, and that the machines manufactured by you are an infringement upon said patent, and you will be treated by us as an infringer from and after the date aforesaid breach of contract.

Yours very truly,

COMPTOGRAPH COMPANY.

(Signed) H. B. WYETH

[SEAL] *Secretary.*

[NOTATION:]

Carbon copy of letter sent by registered mail Jan. 5th, 1907, to Burroughs Adding Machine Co., Detroit, Mich.

H. B. W."

"Registered Letter No. 26659. P. O. Chicago, Ill 106. Received Jan. 5, 1907, 190 , of Comptograph Co. Blackhawk & Dayton, a Letter addressed to Burroughs Adding Machine, Detroit, Mich.

POSTMASTER, per P. K."

"REGISTRY RETURN RECEIPT.

106. Received from the Postmaster at Detroit, 09091 Mich. Registered Leteer. No. 26659. From Post Office at Chicago, Ill., Addressed to Burr. Add. Mach. Co. Date 1/7, 1907.

(Signed) BURROUGHS ADD. MACH.

KEAN L. CRONIN."

It is agreed that the opinion of the Court of Appeals and the letter and receipts above copied, being

(Third) Deposition of Plaintiff's Witness Harry B. Wyeth, stipulated in from Burroughs case.

now fully exemplified on the record, may be withdrawn from evidence and the copies made in the record of the same may stand in place of the originals, this agreement being without prejudice to the objections entered in the record by defendant's counsel.

Q. 42. Since the breach of contract by the Burroughs Company and which consisted in filing a brief and argument in the Court of Appeals to prevent the establishment of the Felt patent and the affirmance of the decree already had, has the Burroughs Company done any act or said anything which might or could lead the Comptograph Company to suppose that it still considered the license agreement to be in existence and in effect? And if so, please state what act it has done or what word it has said?

A. They have neither said nor done anything to make us think their license was still in effect, but, on the contrary, their actions have led us to suppose that they considered with us that the license was revoked and canceled, because they have continued to manufacture and sell machines embodying wide paper carriages and have neither made any report to us of such machines, nor paid any royalty upon them, nor have they exercised the right given them in the license agreement to cancel the contract in case they wished to be relieved from further obligations under same. We therefore could conclude nothing else than that they agreed with us that the license had been revoked and canceled by their own act, and the conduct of the Comptograph Company has been based upon that conclusion.

Q. 43. Referring to the license agreement, I note that in paragraph 4 of the license, said second party—the Burroughs Adding Machine Company, or its predecessor, the American Arithmometer Company, agrees upon the terms and conditions herein specified, to pay the first party,—that is to say, the Comptograph Company,—the

(Third) Deposition of Plaintiff's Witness Harry B. Wyeth, stipulated in from Burroughs case.

following royalties upon *all machines* described and claimed in said letters patent which said second party may manufacture on and after the 1st day of January, 1904, and during the full term of said letters patent. And then follows a statement of the royalties, and how the same are to be paid. Ten dollars per machine is named as the royalty that is to be paid after a final determination of the first suit, until two hundred thousand dollars has been paid, and after that, five dollars per machine until the end of the patent. The payment of the ten dollars per machine is made obligatory upon the Burroughs Company provided the first suit shall be determined favorably to the patent. But the license contemplates that some subsequent suit may accomplish what was not accomplished in the first suit since special provision is made in the contract in paragraph 7, that after the determination of the first suit, if unfavorable, or of a subsequent suit if unfavorable, the Burroughs Company "shall have the right to surrender this agreement and license and be relieved of any further obligations thereunder." Did the Burroughs Company notify the Comptograph Company of its election to terminate the license under clause 7?

By Mr. Rector: All of that portion of the question excepting the last sentence thereof is objected to as argumentative and for the reason that the license contract itself is the best evidence of the obligations of the parties thereunder.

A. They have not.

Q. 44. Since the breach of contract and the abrogation by the Comptograph Company of the license, has the Burroughs Company rendered to the Comptograph Company "within ten days after the first days of January, April, July and October, in each year (excepting January, 1904), a full, true and accurate report of all ma-

(Third) Deposition of Plaintiff's Witness Harry B. Wyeth, stipulated in from Burroughs case.

chines manufactured by the second party under this contract and license during the preceding three months''?

A. It has not.

Q. 45. Since the breach of contract referred to and since the decision of the Circuit Court of Appeals has the Burroughs Adding Machine Company gone right on manufacturing and selling the same kind of adding machines containing and employing transversely-movable wide-frame paper-carriages as those upon which it paid you royalty before the breach of contract?

A. It has.

Q. 46. And is it still making and selling such machines at the present time?

A. It is.

Q. 47. How many of such machines has the Burroughs Adding Machine Company made and sold since the breach of contract, if you are able to state? If you cannot say exactly, approximate it as near as possible.

A. The breach of contract was April 16, 1906, the date of the filing of the brief by the Burroughs Adding Machine Company. Since that date they have probably made approximately one thousand wide carriage machines a month, or a total of about twenty thousand machines.

Q. 48. At $10 per machine, which would be the royalty if the Burroughs Adding Machine Company continued under the obligation of the contract to pay royalties on all machines, that would amount to $200,000 in royalties now due. Has the Burroughs Adding Machine Company tendered to you in settlement of royalties since the breach of contract $200,000 or any other sum of money?

A. It has not.

Adjournment taken until tomorrow morning at ten o'clock tomorrow, November 27th.

(Third) Deposition of Plaintiff's Witness Harry B. Wyeth, stipulated in from Burroughs case.

Met November 27th at ten o'clock A. M., pursuant to adjournment. Present, as before.

Q. 49. Mr. Rector, in his brief, mentions the fact that Mr. Felt took his wide paper carriage machine to the Census Office in February, 1890, and that this old machine is produced and offered in evidence as "Complainant's Exhibit Felt's 1890 model." Are you familiar with that machine?

By Mr. RECTOR: Question is objected to as irrelevant and immaterial.

A. I am. I have seen and operated it many times.

Q. 50. What training and experience have you had in the way of handling and operating various different kinds of adding machines that would enable you to say whether or not that machine was a practical operative machine?

By Mr. RECTOR: Same objection as to the preceding question.

A. I began selling adding machines in the summer of 1894, and with the exception of an interval of a few months I have been continuously in that business ever since. I presume I have examined and operated every make of adding machine that has ever been on the market that I know of.

Q. 51. Please state where that original 1890 model is at the present time.

By Mr. RECTOR: Same objection.

A. It is an exhibit in the suit pending against the Adder Machine Company.

Q. 52. Please state how recently you have examined and operated that machine.

By Mr. RECTOR: Same objection.

A. I think about a month or six weeks ago.

Q. 53. When did you first examine and operate that machine? I mean with reference to the pendency of the

(Third) Deposition of Plaintiff's Witness Harry B. Wyeth, stipulated in from Burroughs case.

suit of the Comptograph Company against the Universal Company, in which Mr. Rector's brief was filed?

By Mr. RECTOR: Same objection.

A. I first examined this machine, as I recall it, several years before the suit was filed against the Universal Company. I know that I was familiar with the machine certainly as long ago as 1901 or '2.

Q. 54. Was there any change made in that machine while you knew of it or since you first saw it?

By Mr. RECTOR: Same objection.

A. Absolutely none. During a large part of that time it has been in the safe deposit vaults and the receipt has been in my possession.

Q. 55. Please state whether or not that 1890 Felt mechine is a practical and operative machine.

By Mr. RECTOR: The question is objected to as irrelevant and immaterial and as calling for secondary evidence.

A. It is both practical and operative and has been so at all times that I have seen or known it. I well recollect my first impression of the machine was one of extreme wonder that a machine which was as serviceable and desirable as that one should not have been placed more largely upon the market. Of course this 1890 model is of a type different from the models of today, but judging it from the standard of adding machines as they were when I first engaged in the business in 1894, it possesses a great many advantages over anything that was in existence at that ime. With the exception of the wide carriage mechanism, the mechanism of the 1890 model is of exactly the same type as that used in the early Comptographs of which a large number have been sold and placed upon the market. One of these early Comptographs having exactly the same interior mechanism as the 1890 model except for the wide carriage, is an ex-

(Third) Deposition of Plaintiff's Witness Harry B. Wyeth, stipulated in from Burroughs case.

hibit in this case referred to against the Adder Machine Company, the testimony in reference to such machine showing that it had been in continuous use for a period of fifteen years or there abouts. This machine I am referring to is an exhibit in the case against the Universal Company instead of against the Adder Machine Company, and I believe the 1890 model to which I have been referring is also an exhibit in the Universal case and not the Adder Machine case. I mean by this the case now pending with the Universal Company. Testimony in both the Universal and the Adder Machine Company cases was taken about the same time, and I for a moment confused the two.

Q. 50. Would you have had any difficulty in selling such a machine as the 1890 model if you had had such machines in 1894 and up to 1898?

By Mr. Rector: Question is objected to as irrelevant and immaterial.

A. In 1894 the task of selling any adding machines was a difficult one, but I have no hesitation in saying that there was a very great demand even at that time for a machine with the wide carriage where a party wanted any adding machine at all, and it is my belief that I should have found the 1890 model very much more readily saleable than the Burroughs machines that I was selling in 1894.

Q. 57. In the former suit against the Universal Company—the one in which Mr. Rector filed his brief—there was no defense of abandonment made in the original pleadings. And this defense of abandonment was made by an amended answer, filed after the testimony had all been taken. The testimony having been taken not with the view of showing that Mr. Felt had not abandoned his 1890 machine, but merely with the view of showing

(Third) Deposition of Plaintiff's Witness Harry B. Wyeth, stipulated in from Burroughs case.

that the date of his invention of that machine was in 1890. Is that true?

By Mr. RECTOR: The question is objected to as irrelevant and immaterial and as calling for secondary evidence.

A. It is true.

Q. 58. The amended answer is printed at pages 24 to 28 of the Transcript of Record in United States Circuit Court of Appeals in the suit of the Comptograph Company against the Universal Company, and I will ask you to read a part of the allegation concerning abandonment from that answer and which I point out to you.

By Mr. RECTOR: Same objections as to last preceding question.

A. I read:

"The said Dorr E. Felt, patentee of said Letters Patent No. 628,176, made a machine embodying the alleged improvement or improvements set forth in claims 1, 2 and 4 of said patent, which machine was completed and capable of useful operation in the month of January, 1890."

Q. 59. Do you know whether or not Mr. Edward Rector had a copy of this transcript of record before him when he prepared the brief which he filed in that case?

By Mr. RECTOR: Objected to as irrelevant and immaterial.

A. I believe that he was furnished such copy by us.

Q. 60. Then it is true, is it not, that if the said Edward Rector represented in his brief that the 1890 machine was impractical and inoperative, or anything of that kind, he did so not only in the face of the fact which he either knew or might have learned about by inquiry, but also in face of the defendant's own pleading in that cause which he had opportunity to know about and must have known about. Is that true?

(Third) Deposition of Plaintiff's Witness Harry B. Wyeth, stipulated in from Burroughs case.

By Mr. RECTOR: The question is objected to as leading, argumentative, and irrelevant and immaterial.

A. It is certainly true.

Q. 61. Has there been any change in the ownership of the Felt patent No. 628,176 in suit since the granting of the license referred to in the plea herein? I mean the license to the Burroughs Company, successors of the American Arithmometer Company?

A. There has not.

By Mr. MUNDAY: Counsel for complainant here offers in evidence a printed Patent Office copy of the specification and drawings of the Letters Patent to Dorr E. Felt, No. 628,176, granted July 4, 1899, for a tabulating machine, being the patent sued on this cause, and the same is marked "Complainant's Exhibit, Felt patent No. 628,176."

Direct examination closed.

Cross-Examination by Mr. Rector.

By Mr. RECTOR: Cross-examination without waiver of any of the objections entered of record by defendant's counsel, including that entered immediately after the answer of the witness to the first question of his direct examination.

X-Q. 62. Mr. Wyeth, in answer to question 6 of your direct examination, you stated that the American Arithmometer Company made all the payments due under the license contract Exhibit A to the complainant up to the time of the assignment and transfer of said license to the present defendant, Burroughs Adding Machine Company. Will you please state whether the Burroughs Adding Machine Company paid all of the royalties due from it to the complainant under said license contract?

A. It did up to December 31, 1905.

X-Q. 63. Were any royalties demanded or requested of it by or on behalf of the complainant after that date?

(Third) Deposition of Plaintiff's Witness Harry B. Wyeth, stipulated in from Burroughs case.

A. There were not. The license provided that no royalties should be paid during the period that might elapse between December 31, 1905, and the termination of the first suit under the patent. Naturally no royalties were demanded during that time, and as I have previously testified, after that time we considered the license canceled.

X-Q. 64. Then, as I understand you, up to the time at which the complainant considered the license to have been forfeited or to have been canceled and gave notice to that effect and attempted to revoke it, the Burroughs Adding Machine Company have made all payments due or claimed to be due from it to the complainant under the license contract. Is that correct?

A. That is correct.

X-Q. 65. As I understand the purport of your direct examination, the only alleged breach of the license contract on behalf of the Burroughs Company, and the only failure on its part to fully perform its obligations thereunder, of which the complainant complains, is the filing of the brief on behalf of the Burroughs Company in the Court of Appeals in the suit of the complainant against the Universal Adding Machine Company? Is that correct?

A. Not at all.

X-Q. 66. What other breaches of the license contract by the Burroughs Adding Machine Company does the complainant allege and complain of?

A. The complainant considers that the filing of the brief referred to definitely canceled and abrogated the license agreement. If, however, said agreement had not been thus canceled, the complainant would consider that a breach of such agreement had been made by the defendants when they confederated with the Adder Machine Company, another infringer of the Felt patent, to

(Third) Deposition of Plaintiff's Witness Harry B. Wyeth, stipulated in from Burroughs case.

place upon the market the Wales machines. The complainant would further consider that a breach of the contract would have been made, had same been in effect, by the failure of the Burroughs Company to make any reports or pay any royalty thereunder since the termination of the first suit.

X-Q. 67. Have you now enumerated all of the breaches of the license contract which the complainant alleges and complains of?

A. All that I now recall.

X-Q. 68. You say that the complainant would consider that the defendant had been guilty of a breach of the license contract by reason of its failure to make any reports to the complainant since the termination of the first suit. Will you please state whether the complainant ever demanded or requested any report of the defendant which was not made?

A. It certainly never demanded any reports after the termination of the first suit because the complainant considered the license contract at an end.

X-Q. 69. Did the defendant ever, at any time, fail to make any reports that were due from it to the complainant under the license contract?

A. Up to December 31, 1905, the defendant made all reports required. Since then it has made no reports of any kind.

X-Q. 70. Has the complainant, at any time since December 31, 1905, considered any report of any kind due from the defendant under the license contract?

A. If there had been a license contract, it would certainly have considered such reports due. As in the complainant's judgment there was no license contract after the termination of the first suit, the complainant considered no reports due after that time.

X-Q. 71. Did the complainant consider any reports

(Third) Deposition of Plaintiff's Witness Harry B. Wyeth, stipulated in from Burroughs case.

due from the defendant under the license contract between December 31, 1905, and the termination of the first suit?

A. It did not. As I have previously stated, the contract of license distinctly provides that during a period which might possibly elapse between December 31, 1905, and a termination of the first suit, no royalties were to be paid, and therefore no reports to be rendered by the defendant.

X-Q. 72. Then, up to the time of the alleged forfeiture of its license, due to the filing of the brief on its behalf in the Court of Appeals, the Burroughs Company, as well as its predecessor in business, had fully performed all of its obligations to complainant under the contract. Is that correct?

A. That is correct.

X-Q. 73. I understand it to be intended to be admitted, both by complainant's counsel and yourself, that the defendant, Burroughs Adding Machine Company, is in fact the successor in business of the American Arithmometer Company, the original licensee named in said license contract, and that said license contract was duly and lawfully assigned and transferred to the defendant, by said American Arithmometer Company, with the knowledge and consent or acquiescence of the complainant; but as defendant's plea contains some affirmative allegations upon these points, I should like you to state whether or not, of your own knowledge, the allegations contained in paragraph 1 of defendant's plea are correct.

A. They are correct.

X-Q. 74. And it is also the fact that after the assignment and transfer of the assets and property of the American Arithmometer Company to the defendant, as recited in said paragraph of defendant's plea, the complainant recognized the defendant as the owner of the license con-

(Third) Deposition of Plaintiff's Witness Harry B. Wyeth, stipulated in from Burroughs case.

tract in question and as complainant's licensee thereunder?

A. That is correct.

X-Q. 75. The allegations of paragraph 4 of defendant's plea are also true, of your own knowledge, are they not?

A. They are all true to the best of my knowledge and belief.

X-Q. 76. Referring to your answer to X-Q. 66, in which you say that the complainant considers that the defendant has been guilty of a further breach of the license contract by confederating "with the Adder Machine Company, another infringer of the Felt patent, to place upon the market the Wales machine," will you please state when the Wales machine in question was first placed upon the market?

A. My best recollection is that it only began to figure in the market about two years since. It had been talked of for some time previous, but so far as I know it had practically done nothing towards getting its machines on the market until about the time I have mentioned.

X-Q. 77. Can you not fix the date a little more definitely than "two years since"?

A. Not by anything that now occurs to me.

X-Q. 78. Two years since would be November, 1905. Was not the Wales machine in question upon the market and in use, to your knowledge, some considerable time prior to that date?

A. I cannot say that I have any definite knowledge on that point. There may possibly have been a few Wales machines in existence and in use prior to that time, but my impression is, as stated, that it was about two years ago that the Wales machine really began to be marketed.

X-Q. 79. Had you never heard of the Wales machine

(Third) Deposition of Plaintiff's Witness Harry B. Wyeth, stipulated in from Burroughs case.

at the time of the license contract between the complainant and the defendant in this case was made in January, 1904?

A. Unquestionably I had heard of the Wales machine at that time. As I have previously stated, the Wales machine had been talked of and efforts made to promote it for a number of years before it was actually in the situation that I should call "being placed upon the market."

X-Q. 80. But it was in fact, was it not, one of the infringements or prospective infringements of the Felt patent which was in mind and taken into consideration at the time the license contract in this case was made?

A. It probably was a prospective inrfingement, for, as stated, I unquestionably had heard of the machine at that time, and probably expected that at some time in the more or less remote future it would begin to cut a figure in the adding machine market.

X-Q. 81. Assuming now that the Wales machine did not get well upon the market until about two years ago, say November, 1905, when was it that the defendant in this case, according to any knowledge or information which you have on the subject, began "confederating with the Adder Machine Company, another infringer of the Felt patent, to place upon the market the Wales machine"?

A. At some time within the last six months, I think. Certainly since the 1st of January, 1907.

X-Q. 82. So that even according to your recollection as to when the infringing Wales machine was first placed upon the market, it had been upon the market more than a year prior to the date at which the defendant in this case is alleged to have begun its confederation with the Adder Machine Company to place the Wales machine upon the market. Is that not true?

(Third) Deposition of Plaintiff's Witness Harry B. Wyeth, stipulated in from Burroughs case.

A. That is correct.

X-Q. 83. And you know, as a matter of fact, of your own personal knowledge, do you not, that the Wales machine was very extensively sold in different parts of the country during the year 1906?

A. I do not. The term "extensively sold" is, of course, a relative one, but I should hardly say that the Wales machine had been "very extensively sold in different parts of the country during the year 1906."

X-Q. 84. Well, at any rate, to use your own language, it began to cut a figure, and a very considerable figure, in the adding machine market as early as 1906, did it not?

A. I think not.

X-Q. 85. Would you be willing to testify, according to the best of your knowledge, information and belief, on the subject, that there were not more Wales adding machines manufactured and sold during the year 1906 than there were Compotgraphs, referring by the latter to the machines manufactured and sold by the complainant in this case?

A. I have, of course, no absolutely definite knowledge as to the exact number of Wales machines made and sold during the year 1906. My judgemnt would be, however, that they certainly had *not* sold "many more machines" in that year than there were Comptographs sold.

X-Q. 86. I did not ask you whether, in your judgment, there were "many more" Wales machines sold in 1906 than there were Comptographs, but, as my question was intended to bring out in a general way the relative number of the two makes of machines, according to the best of your knowledge, information and belief on the subject, I will put it the other way and ask you whether you are willing to testify that more Comptographs than Wales machines were manufactured and sold during the year 1906?

(Third) Deposition of Plaintiff's Witness Harry B. Wyeth, stipulated in from Burroughs case.

A. I have previously stated that I have no definite knowledge as to the number of Wales machines made and sold during the year 1906 and I therefore certainly would not testify positively as to a comparison on the point you have mentioned. I have previously stated and again repeat, that in my judgment the Wales machine while on the market in the year 1906 really did not amount to a great deal during that time. I frankly should not consider it today as a machine that was of great importance in the actual selling field of adding machines.

X-Q. 87. Will you not please answer my last question according to your best judgment of the matter based upon such knowledge, information and belief as you have on the subject?

A. I am perfectly willing to answer the question as to my best judgment, but that is very different from asking me to testify definitely as to a fact upon which I have stated I have no definite information. My general impression would be that there were probably about as many Wales machines sold in the year 1906 as there were Comptographs. I doubt if there would be much difference either way, but I believe any slight difference there was would, in my judgment, be in favor of the Comptograph.

X-Q. 88. Do you recall when it was that you first saw a Wales adding machine, which you considered to be an infringement of the Felt patent here in suit, or which employed a transversely-movable wide paper carriage?

A. I do not recall when I first saw such machine.

X-Q. 89. Can you say whether or not you saw any such machine during the year 1905?

A. I cannot. My recollection would be that the first Wales machine that I saw with a wide carriage was of comparatively recent time, but whether that was in 1905 or not, I would not attempt to say.

(Third) Deposition of Plaintiff's Witness Harry B. Wyeth, stipulated in from Burroughs case.

X-Q. 90. You would not be willing to testify, would you, that you did not see such a Wales machine as early as the year 1905?

A. I would not be willing to testify definitely that I did or did not. In the course of my business I hear of so many different adding machines that are in contemplation and as a matter of fact actually examine so many either upon paper or through models, and the models of the machines that are actually being built change so frequently, that it would be entirely impossible for me now to recollect at just what date I had seen a particular model of the Wales machine unless there had been something to fix that date in my memory. And I recall nothing that would fix the date when I first saw the first Wales machine with a wide carriage.

X-Q. 91. At any rate, you distinctly remember, do you not, having seen a number of such machines during the year 1906?

A. I presume that I saw a number of such machines.

X-Q. 92. When was it that complainant began its suit against the Adder Machine Company for infringement of the Felt patent, to which you have referred in your direct examination?

A. November, 1906.

X-Q. 93. And where was that suit brought?

A. In Boston, Massachusetts.

X-Q. 94. And where is the Adder Machine Company, the manufacturer of the Wales machine, located?

A. At Wilkes-Barre, Pennsylvania.

X-Q. 95. Now, Mr. Wyeth, regarding this alleged conspiracy or confederation of the defendant with the Adder Machine Company, to place the infringing Wales machine upon the market, what do you really know about it, anyway?

(Third) Deposition of Plaintiff's Witness Harry B. Wyeth, stipulated in from Burroughs case.

A. I certainly know the facts to which I have testified in the direct examination.

X-Q. 96. Is that the best answer you can give?

A. If the question will be made somewhat more specific I will endeavor to give a more specific answer.

X-Q. 97. Do you in fact know of any conspiracy or confederation or agreement or arrangement of any kind between the Burroughs Adding Machine Company, defendant, and the Adder Machine Company, the manufacturer of the Wales machine, with respect to the marketing of the Wales machine or any other subject?

A. I know that the president, the general manager, the counsel and an employe of the Burroughs Adding Machine Company are directors in the Adder Machine Company, and that they own nearly half the stock of that company. I think the inference from such fact is very clear.

X-Q. 98. I have not asked you for inferences. Have you stated all you do in fact know respecting the relations of the defendant and the Adder Machine Company? If not, please state what else you know.

A. I presume the facts I have stated constitute the bulk of my knowledge. I think such facts, however, are quite sufficient to justify my statement that by them the Burroughs Company would be considered by us to have committed a breach of the license contract.

X-Q. 99. Then, as a matter of fact, all you really know, and all you have been informed, concerning any relations whatsoever between the Burroughs Adding Machine Company and the Adder Machine Company is the single fact that some months ago, during the present year, four men connected in various ways with the Burroughs Adding Machine Company acquired stock in and were elected directors of the Adder Machine Company. Is that not correct?

(Third) Deposition of Plaintiff's Witness Harry B. Wyeth, stipulated in from Burroughs case.

A. Not at all. The question asked me was what I knew about the matter. If I am asked what I have been informed, I could state a great many other statements that have been made to me bearing on this subject.

By Mr. MUNDAY: I think the question calls for you to state what you have been informed.

By Mr. RECTOR: I ask to have the question read to the witness.

The WITNESS (continues answer): I have heard the question re-read and again repeat my answer. There has been a great deal of talk among the adding machine trade as to the relations between the Burroughs Company and the Adder Machine Company and a great many statements have been made to me at various times by different parties on the subject. For instance, I have been told that the directors' meetings of the Adder Machine Company are sometimes held at Wilkes-Barre and sometimes at Detroit. I have been told that the Burroughs Company has made one or more propositions to the Adder Machine Company with a view to suppressing the sale of the Wales machine in the United States and selling it entirely abroad. I have been told that various employes of the Burroughs Company have been placed in the shops of the Adder Machine Company with a view to obtaining information which they could bring to the factory of the Burroughs Company. In the same way I could instance a great many other statements that have been made to me, but which I have not mentioned, inasmuch as I understood the counsel was asking me with reference to my knowledge and not as to my general information on the subject.

By Mr. RECTOR: The answer is objected to as irresponsive to the question and a mere retailing of gossip.

X-Q. 100. Your direct examination shows that you did not have, and could not possibly have, any actual

(Third) Deposition of Plaintiff's Witness Harry B. Wyeth, stipulated in from Burroughs case.

personal knowledge concerning the matters you testified about respecting the relations of the defendant and the Adder Machine Company; but you assumed to testify on your direct examination, nevertheless, that you knew many things relating to this subject. Confining my question to such "knowledge" as you assumed to have on your direct examination, I ask you again whether you know anything whatever about the relation of the defendant and the Adder Machine Company beyond the fact stated in my X-Q. 99.

By Mr. MUNDAY: The form of the question is objected to as an attempt to browbeat the witness. These Harriman performances are sometimes more evident than the ingenious counsel who concocts them thinks. But it will do no good to try to frighten the witness.

A. If the counsel will kindly refer me in my direct examination to any place where I stated that I did not have any personal knowledge on this subject, it will assist me in answering his question intelligently. As the matter now stands, I have answered the question to the best of my ability.

X-Q. 101. If your testimony is to be confined to your actual personal knowledge concerning the subjects you have testified about, will you please explain to the court how, as stated by you in your answer to X-Q. 97, you *know* that the president, general manager, counsel and an employe of the Burroughs Adding Machine Company own nearly one-half of the stock of the Adder Machine Company.

A. My knowledge consists in the fact that I was told by both the president and the counsel that this was true.

X-Q. 102. Then your only knowledge on the subject consists in what some one has told you, does it?

A. I have previously stated that my knowledge consists in what the parties themselves have told me.

(Third) Deposition of Plaintiff's Witness Harry B. Wyeth, stipulated in from Burroughs case.

X-Q. 103. How do you *know* that the counsel for the Burroughs Adding Machine Company is a director of the Adder Machine Company?

A. He told me himself that he was.

X-Q. 104. When, where and under what circumstances did he tell you that?

A. At an interview in his office not a great while after the stock was acquired. If necessary, I can locate the exact date of that interview.

X-Q. 105. How do you *know* that an employe of the Burroughs Adding Machine Company, whom you have designated as a Mr. Lauver, is a director of the Adder Machine Company?

A. I know that through having seen his name published as a director, through having been told that he was a director by the counsel for the Burroughs Company, by having been told that he was a director by the president of the Burroughs Company and by being told that he was a director by the president of the Adder Company itself. I might add also to my previous answers the fact that I have been told the names of these directors by Mr. Nesbit, the president of the Adder Company.

X-Q. 106. How do you *know* that the general manager of the Burroughs Adder Machine Company is a director of the Adder Machine Company?

A. My answer to the previous question would cover this question also.

X-Q. 107. I believe you have stated that the board of directors of the Adder Machine Company consists of nine members. You know that to be a fact, do you?

A. Yes.

X-Q. 108. Then it is a fact, is it, that the members of that board of directors who are connected with the Bur-

(Third) Deposition of Plaintiff's Witness Harry B. Wyeth, stipulated in from Burroughs case.

roughs Adding Machine Company constitute a minority of that board?

A. They constitute four out of the nine, which is a minority.

X-Q. 109. And no one of them is an officer of the Adder Machine Company, to your knowledge, is he?

A. I believe that they are not, in spite of the strenuous efforts which it is generally understood they have made to become so.

X-Q. 110. And their entire stock holding in the Adder Machine Company, according to your knowledge or information, is a minority holding of the capital stock of that company, is it not?

A. It is at the present time, but I am informed that vigorous efforts are being made to obtain a majority or all of the Adder Company stock by the Burroughs representatives.

X-Q. 111. And it has never been larger than it is at the present time, so far as you know, has it?

A. Not to my knowledge.

X-Q. 112. Then there never has been a time, has there, to your knowledge, when the stockholders and directors of the Adder Machine Company who you say are connected with the Burroughs Adding Machine Company, had any power, by virtue of their stock holdings or their positions as directors, to control or direct the management of the Adder Machine Company?

By Mr. MUNDAY: Objected to since the question assumes that it is the duty of the director of a company to do otherwise than work with his whole force and power for the general interest of the company. It is horrible to suppose that a director of the Wales Adder Machine Company could work for any other interest than the interest of the Wales Adder Machine Company. And this indicates the extreme turpitude of the methods of the Burroughs Company in acquiring stock in a com-

(Third) Deposition of Plaintiff's Witness Harry B. Wyeth, stipulated in from Burroughs case.

peting concern with a view to wrecking such an organization, if that was the intention. The presumption of law must be that the directors were working for the benefit solely of the Wales Adding Machine Company.

By Mr. Rector: The remarks of counsel are beside the question. The examination of the witness was intended to show whether or not the stockholders and directors of the Adder Machine Company, who are said to be connected with the Burroughs Adding Machine Company, have at any time had any power to control the infringement of complainant's patent by the Adder Machine Company which has been complained of here on the direct examination.

A. They had the power which would come from holding four out of nine directors and approximately forty-eight per cent. out of one hundred per cent. of the stock.

X-Q. 113. Will you please explain to the court, if you can, how those facts would have enabled, or now enable, the minority stockholders and directors of the Adder Machine Company to control the affairs of that company, and particularly the alleged infringement of the complainant's patent?

A. The holder of forty-eight per cent. of a corporation's stock is usually in business life far from helpless towards directing the general policy of the corporation. In my judgment the holder of forty-eight per cent. of the capital stock of any corporation that I have ever been familiar with or connected with would find a great many ways in which to have a strong influence in directing the policy of the company.

X-Q. 114. Have you any knowledge of, or have you observed, any change in the control or management or policy of the Adder Machine Company since the gentlemen connected to the Burroughs Company became stockholders and directors in the Adder Machine Company?

A. I cannot say that I have. The Adder Machine

(Third) Deposition of Plaintiff's Witness Harry B. Wyeth, stipulated in from Burroughs case.

Company has continued to infringe our patents just as it did before.

X-Q. 115. And it had been manufacturing and selling that same infringing machine for more than a year prior to the date at which the gentlemen connected with the Burroughs Company became stockholders and directors in it, has it not?

A. About that time. Its sales at first were, of course, slight, but probably increased as the machines became better known. The Comptograph Company brought suit against the Adder Company considering that they were becoming a factor in the adding machine market some months before the Burroughs Company became interested with the Adder Company.

X-Q. 116. You admitted, a while ago, I believe, that the Adder Machine Company probably sold as many adding machines during the year 1906 as the complainant, Comptograph Company, did; and it was subsequent to the year 1906 that the gentlemen connected with the Burroughs Company became stockholders and directors of the Adder Machine Company, was it not?

A. I believe that is correct.

X-Q. 117. Regarding the alleged advertisement which has been introduced in evidence here as "Complainant's Exhibit Adder Machine Company's Advertisement," what personal knowledge, if any, have you respecting that alleged advertisement?

A. The advertisement appeared in the November issue of Van Norden's Magazine.

X-Q. 118. And that is all you know about it, is it?

A. About the advertisement, yes.

X-Q. 119. Mr. Wyeth, what were you doing—what business were you engaged in—during the years 1889 and 1890?

A. I was in the lumber business.

(Third) Deposition of Plaintiff's Witness Harry B. Wyeth, stipulated in from Burroughs case.

X-Q. 120. Where?

A. In Wisconsin and Arkansas.

X-Q. 121. And what were you doing in the years 1891, 1892 and 1893?

A. I was in the lumber business the first part of the time in Arkansas, the last two years, I think, in St. Louis.

X-Q. 122. I believe you have stated on direct examination that you became connected with the American Arithmometer Company, the predecessor in business of the Burroughs Adding Machine Company, in the year 1894. Were you continuously in the lumber business from 1889 to 1894?

A. Continuously except for a matter of six months or so immediately prior to my going with the Burroughs Company, during which time I was in very poor health and spent most of the time in traveling.

X-Q. 123. How long following the year 1894, and in what capacity, did you remain connected with the American Arithmometer Company?

A. A period of six or seven years. I was a general agent of that company, selling machines in the States of Pennsylvania, Delaware, Virginia, West Virginia, Ohio, Indiana, Michigan, Wisconsin and Minnesota.

X-Q. 124. Can you not state definitely just when your connection with the American Arithmometer Company terminated?

A. As I recall now, it was in the fall of 1900.

X-Q. 125. And when did your connection with the Comptograph Company, complainant in this case, begin?

A. The Comptograph Company was organized in the early part of 1902, but I was engaged in efforts to purchase that business and to raise the funds for starting same for a number of months before this, probably six months.

X-Q. 126. What did you do in the interim between

(Third) Deposition of Plaintiff's Witness Harry B. Wyeth, stipulated in from Burroughs case.

leaving the service of the Arithmometer Company and beginning work for the organization of the Comptograph Company?

A. During the greater part of that interim I was connected with a concern known as the Morley Pharmaceutical Company.

X-Q. 127. When did you first become acquainted with Mr. Felt, patentee of the patent in suit in this case?

A. I first met Mr. Felt somewhere about the year 1895, as I now recall it.

X-Q. 128. Where and under what circumstances did you meet him?

A. I called at his place of business in Chicago in an effort to find out something about the adding machines that he was manufacturing.

X-Q. 129. Did you continue your acquaintance with Mr. Felt after that first meeting?

A. No. I saw nothing of him until the time that I called on him some time in the latter part of 1901.

X-Q. 130. When and where did you first meet any other officers of the Felt & Tarrant Manufacturing Company or of the present Comptograph Company?

A. At about the time I mentioned, the latter part of 1901, at their office in the City of Chicago.

X-Q. 131. When and under what circumstances was the Felt patent here in suit first called to your attention?

A. I cannot state the exact time or circumstances, but it was during the progress of negotiations for the purchase of the Comptograph business.

X-Q. 132. That is, about the latter part of the year 1901?

A. About then.

X-Q. 133. You had never heard of it before that time?

A. Not that I recall.

X-Q. 134. When and under what circumstances did

(Third) Deposition of Plaintiff's Witness Harry B. Wyeth, stipulated in from Burroughs case.

you first learn that Mr. Felt had made the invention described and claimed in this patent?

A. At about this same time.

X-Q. 135. Then you had never heard of either the invention or of the patent prior to the latter part of the year 1901?

A. Not that I now recall.

X-Q. 136. When and where and under what circumstances did you first see the structure which has been referred to in your direct examination as "Felt's 1890 Model?"

A. At somewhere about the same time I have mentioned, that is to say, at some period during the negotiations for the purchase of the Comptograph business. I presume I saw it at the business office of the Felt & Tarrant Manufacturing Company and as stated, it was at some point during the negotiations referred to, but I do not recall the particular circumstances attending my first view of the 1890 model.

X-Q. 137. Do you remember just where, at Felt & Tarrant's place of business this 1890 model was when you first saw it?

A. As I recall the matter, it was kept in a cupboard in their office, and was lifted out by Mr. Felt and placed upon a table.

X-Q. 138. And where did you see the model after that time, if at all?

A. I saw it a great many times after that, and when the transfer of the Comptograph business was made to the Comptograph Company, the model passed into my custody as manager of the Comptograph Company.

X-Q. 139. Where was it when you saw it frequently prior to the transfer of the business to the Comptograph Company?

A. It was in Mr. Felt's office and I believe it was

(Third) Deposition of Plaintiff's Witness Harry B. Wyeth, stipulated in from Burroughs case.

taken to the vaults of the Safe Deposit Company shortly before the final organization of the Comptograph Company.

X-Q. 140. Referring now to answer to Q. 31 of your direct examination, and your discussion of the brief which was filed in the Court of Appeals on behalf of the Burroughs Company in the Universal suit, you say of the 1890 model:

> "As a matter of fact, we knew that Mr. Felt had shown and used and worked upon and with this machine systematically and almost constantly from the time of his return referred to until the filing of his application for patent."

To whom do you there refer to as "we?"

A. I mean the counsel for the Comptograph Company and those directly connected with the Comptograph Company.

X-Q. 141. What knowledge had you, personally, upon the subject?

A. At that time my knowledge came from statements made by Mr. Felt, Mr. Tarrant and others. This knowledge has since been confirmed by the sworn testimony, in the pending suit against the Universal Company, of Mr. Felt, Mr. DeBerard, Mr. Bond, Mr. Michaels and Mr. Ziehm.

X-Q. 142. Then the only knowledge which you had upon the subject was based upon what others had told you or said about it?

A. That and in reading various documents with reference to same. I might add that all of these facts were generally considered among those connected with the case as matters of common knowledge and were frequently discussed and talked about.

X-Q. 143. Whom do you include in the term "those connected with the case?"

A. Mr. Tarrant, Mr. Felt, Mr. Munday, Mr. Evarts,

(Third) Deposition of Plaintiff's Witness Harry B. Wyeth, stipulated in from Burroughs case.

Mr. Clarke, Mr. Adcock, Mr. DeBerard—at least this number. The facts as stated were generally considered public property and were not concealed in any way and so far as we knew, all those interested, including the counsel for the Burroughs Company, had full access to information regarding them.

X-Q. 144. At a later point in your answer to Q. 31, answering certain statements in the brief in question, and referring to the affidavit which Mr. Felt filed in the Patent Office in connection with the prosecution of his application for the patent here in suit, you say:

> "As a matter of fact, neither Mr. Felt nor his attorney had any thought of abandonment in their minds when they made the statement in the affidavit, but made the statement in the form that it was because in their judgment it was the proper way to make it in order to avoid disclosing facts in a patent application that they might afterwards desire to keep secret."

What personal knowledge had you of the matter stated in the above extract from your testimony?

A. The statement referred to in the Felt affidavit is one to the effect that his invention had been made "many months" prior to a certain date, and the statement in the brief of the Burroughs Company was to the effect that the expression "many months" had been used in order to avoid a loss of the patent on the ground of abandonment, because in reality the invention had been made some years before the date referred to. As I understand the regulations of the Patent Office, a patent is liable to be thrown into interference at any time within two years after its issue, but immediately upon its issue, the file wrapper of the patent becomes open to public inspection. Therefore, if the exact date of the Felt invention had been disclosed in the affidavit referred to, it would have been an exact guide for any future applicant whose pat-

(Third) Deposition of Plaintiff's Witness Harry B. Wyeth, stipulated in from Burroughs case.

ent might have been thrown into interference with the Felt patent and would have afforded a thorough mark for such applicant to swear to. All this had been explained to me many times by patent attorneys and had been told to me also by Mr. Felt himself. The sworn testimony of Mr. Bond and Mr. Dyrenforth, in the case against the Universal Company referred to and now pending, confirms my belief that this was a customary form in which to make out such an affidavit as Felt was filling.

By Mr. Rector: The answer is objected to as irresponsive to the question.

X-Q. 145. What knowledge had you, at the time the brief on behalf of the Burroughs Company was filed in 1906, concerning what may have been in the minds of Mr. Felt and his counsel at the time they prepared Mr. Felt's affidavit in 1898?

A. I had the statements of Mr. Felt and his counsel themselves as to what was in their minds in 1898 and same was so evidently in accordance with a fair view of the facts and circumstances, that I saw no reason whatever to question their statements. I think I may fairly be said to have considerable more reason for stating what was in the minds of Mr. Felt and his counsel at that time, than had the counsel for the Burroughs Company when he assumed to make a positive statement on this point in his brief.

X-Q. 146. At a later point in your same answer, referring to the statement in the brief in question to the effect that Felt brought his 1890 model back from Washington to Chicago and put it aside and did nothing more with it you say:

"As I have stated, this is an entirely gratuitous misstatement of fact."

As a matter of fact, you have no personal knowledge

(Third) Deposition of Plaintiff's Witness Harry B. Wyeth, stipulated in from Burroughs case.

whatever of any facts contradictory of the statement in the brief, have you?

A. I made the statement in question because it was a matter of common and general knowledge with all those concerned in the conduct of the Comptograph case that from the time when he returned from Washington, Mr. Felt had worked upon this model, had shown it to others, had used it in a variety of ways for various purposes and had in general given his attention to the same to the utmost of his then limited means and indifferent health. This knowledge was common to us all, and there is no reason why the counsel for the Burroughs Company should not have had the same as it was thoroughly open to him. This common knowledge of that time has since been absolutely confirmed by the sworn testimony of the gentlemen whom I have named above in the case now pending against the Universal Company.

By Mr. Rector: The answer is objected to as irresponsive to the question.

X-Q. 147. You had and now have, absolutely no knowledge whatever concerning the facts recited in your last answer, except what others have told you, or testified about them, have you?

A. My knowledge certainly consisted in the statements of others, both in general and under oath.

X-Q. 148. And that was the only knowledge you had on the subject?

A. I think my last answer answers that question.

X-Q. 149. Will you please explain how you could have had any other knowledge respecting what was done with the Felt 1890 model between the years 1890 and 1898 when you admit that you never heard of Felt's invention or patent or model until 1901?

A. I am not good at guessing conundrums and have

(Third) Deposition of Plaintiff's Witness Harry B. Wyeth, stipulated in from Burroughs case.

not claimed to have any knowledge other than to which I have testified.

Adjournment taken until Tuesday morning, December 3, 1907.

Met Tuesday, December 3, 1907, at two o'clock, pursuant to adjournment. Present as before.

X-Q. 150. At a still later point in answer to Q. 31 of your direct examination, Mr. Wyeth, you characterize as "an entirely gratuitous misstatement of fact" the statement of the brief to the effect referring to the 1890 model, that "Felt brought it back to Chicago and put it aside and did nothing more with it." Where were you, Mr. Wyeth, and what were you doing at the time Mr. Felt is said to have brought his 1890 model back from Washington?

By Mr. MUNDAY: Objected to as quite immaterial, since the inquiry is what Mr. Wyeth knew, and what Mr. Rector or those acting with the Burroughs Company might have known concerning the real facts of abandonment at the time of the breach of contract consisting in filing a brief that misstated the real facts as known to the complainants in the former suit.

A. I have previously testified that in 1890 and '91 I was engaged in the lumber business in Wisconsin and Arkansas.

X-Q. 151. And you had no knowledge whatever respecting Mr. Felt's 1890 model at that time, had you?

By Mr. MUNDAY: Same objection.

A. I had not, but as I understand the matter, that is quite immaterial since I am testifying with reference to my knowledge of these facts at the time when the brief of the Burroughs Company was filed, and as to the knowledge which the counsel for the Burroughs Company could have had and was presumed to have had at the time of the filing of this brief.

(Third) Deposition of Plaintiff's Witness Harry B. Wyeth, stipulated in from Burroughs case.

X-Q. 152. And you never saw or heard of Mr. Felt's 1890 model until ten years after the date at which he is said to have brought it back from Washington, did you?

A. I have previously stated that I first saw Mr. Felt's 1890 model about 1901.

X-Q. 153. Then during the ten years from 1890 to 1900, inclusive, you knew absolutely nothing about Mr. Felt's model or what he might or might not have been doing with it. Is that not true?

A. I have previously stated several times that I first saw and heard of this model at about 1901.

X-Q. 154. So that all you know or claim to know about the model is what you have learned from others since the year 1900, more than ten years after the model is said to have been made; is that correct?

A. I have previously stated that my first knowledge and view of this model was about 1901 and that my knowledge since that time has been from the statements of others, from the reading of printed publications which made reference to the facts in question, and from the sworn testimony that has been taken in the pending suit against the Universal Company. As I understand the situation, I again repeat that I am testifying as to facts which were common knowledge to all those concerned in the Comptograph Company litigation in the year 1906, when the Burroughs brief was filed.

X-Q. 155. At a number of places in both your direct and cross-examination, Mr. Wyeth, you have either said or intimated that counsel for the Burroughs Company was fully advised of the actual facts respecting Mr. Felt's 1890 model at the time the brief on behalf of the Burroughs Company was prepared and filed in the Court of Appeals. What is your basis for any such statement or intimation?

A. I have said that the facts to which I have testified

(Third) Deposition of Plaintiff's Witness Harry B. Wyeth, stipulated in from Burroughs case.

were common knowledge to all those concerned in the conduct of the Comptograph case, that the counsel for the Burroughs Company was in our confidence with respect to this case; that we did not knowingly withhold from him any facts of the case and that, therefore, he certainly was presumed to have a knowledge of these facts, or could have had such knowledge had he so desired.

X-Q. 156. Did you personally ever tell counsel for the Burroughs Company anything about this old 1890 model of Mr. Felt's?

A. I talked with the counsel for the Burroughs Company about the case a number of times and think there is no question but that I told him there was such a model.

X-Q. 157. Do you mean to say, Mr. Wyeth, that you ever told counsel for the Burroughs Company that Mr. Felt's invention which is here in controversy, was embodied in or based upon a model which Mr. Felt had made in 1889 or 1890, nearly eight years before he applied for his patent?

A. As stated I talked with the counsel for the Burroughs Company a number of times about the case, and think I unquestionably told him and in fact have a distinct recollection of telling him that we had in our possession the first machine which Felt built embodying the invention in question. Just what details I told him with reference to this machine or the facts in question, I do not now recall and I should not wish to definitely state. I have stated repeatedly, however, in both my direct and cross-examination that the facts to which I have testified were absolutely common knowledge to all of those concerned in the Comptograph case and were not withheld in any way from the counsel for the Burroughs Company.

X-Q. 159. It is not a question of detail, Mr. Wyeth, nor a question of what you are pleased to term the "com-

(Third) Deposition of Plaintiff's Witness Harry B. Wyeth, stipulated in from Burroughs case.

mon knowledge'' of somebody; but it is a question of fact as to what you did and did not tell the counsel for the Burroughs Company. I now ask you whether you are willing to swear, and whether you do swear, that you told counsel for the Burroughs Company anything whatsoever about this old 1890 model of Mr. Felt's beyond what is disclosed in the record itself in the suit in which the brief on behalf of the Burroughs Company was filed ?

A. I have previously stated, and I again repeat, that I am not willing to testify as to exactly what details I may personally have told to the counsel for the Burroughs Company. As I understand the matter, it is not a question of what I personally may or may not have told counsel for the Burroughs Company, but it is a question of absolute and unqualified mis-statements by the counsel for the Burroughs Company, in his brief, of facts which were generally known to all those concerned with the Comptograph case and which should have been known to or could easily have been learned by counsel for the Burroughs Company.

By Mr. RECTOR: Answer is objected to as not responsive to the question.

X-Q. 159. Mr. Wyeth, please state a single fact or alleged fact concerning Felt's old 1890 model which you ever told or disclosed to counsel for the Burroughs Company beyond what is disclosed in the printed record in the case in which the brief in question was filed.

By Mr. MUNDAY: Objected to as immaterial. It is not to be assumed for a moment that the counsel for the Burroughs Company was not acting for the Burroughs Company and was not possessed of common sense. If he had any doubt about the matter he ought to have inquired about it. Nobody else had any doubt about it.

A. I think it would be a very foolish matter for me to attempt to review the voluminous records of the case

(Third) Deposition of Plaintiff's Witness Harry B. Wyeth, stipulated in from Burroughs case.

in question and attempt to compare same with details of conversations that occurred so long since between counsel for the Burroughs Company and myself. I have stated quite clearly that I am not willing to testify as to details of these conversations. I am absolutely positive in my statement, however, that I never refused to answer any question which the counsel for the Burroughs Company asked me with reference to the case or to give him any information which he wished regarding same.

X-Q. 160. Then you either cannot or will not state a single fact respecting the old 1890 model which you claim to have disclosed to counsel for the Burroughs Company that is not disclosed in the printed record in the case in which the brief in question was filed.

A. I cannot answer this question any more clearly than I have already done.

X-Q. 161. It appears from the printed record in the case in which the brief in question was filed, a copy of which printed record is here before us, that Mr. Felt's model is first mentioned in said record in the deposition of Mr. Felt which was begun on November 4, 1904. Are you willing to swear, Mr. Wyeth, that you disclosed anything whatsoever to counsel for the Burroughs Company concerning Mr. Felt's 1890 model prior to the taking of this deposition of Mr. Felt's beginning November 4, 1904?

By Mr. MUNDAY: Objected to as immaterial since the brief of the Burroughs Company was filed long after this time.

A. I think I have previously said several times that I am not willing to swear or testify as to details of what I may or may not have told counsel for the Burroughs Company. My testimony is not as to what I told counsel for the Burroughs Company, but is clearly with reference to facts that were known to all concerned on the Comptograph side at the time of the filing of the

(Third) Deposition of Plaintiff's Witness Harry B. Wyeth, stipulated in from Burroughs case.

Burroughs brief in 1906, and which it was certainly incumbent upon the counsel for the Burroughs Company to learn before he made such positive and gratuitous misstatement of such facts.

By Mr. RECTOR: The answer objected to as not responsive to the question.

X-Q. 162. You have attempted to evade some of my previous questions, Mr. Wyeth, by confusing what you claim to have told counsel for the Burroughs Company with what may be disclosed in the record of the case in question respecting the Felt model, or by expressing your inability or unwillingness to examine said records sufficiently to distinguish what may be disclosed in it from what you claim to have independently disclosed to counsel for the Burroughs Company. That is the reason why, in my last question, I asked you what you may have disclosed to counsel for the Burroughs Company respecting said model prior to the first disclosure of anything concerning it in the record in question; and I now want to know whether you are willing to swear, and do swear, that prior to November 4, 1904, the date of the beginning of Mr. Felt's deposition in said record, you ever told or disclosed anything whatsoever concerning said Felt 1890 model to counsel for the Burroughs Company?

By Mr. MUNDAY: The statement that the witness has attempted to evade some of the questions is objected to as a misstatement of fact. The question here is not what Mr. Wyeth disclosed to counsel, but whether the Burroughs Company acted in good faith. It was easy for the Burroughs Company to find out all it wanted to know, since it was on our side, and in our confidence. The question is objected to therefore, as immaterial, irrelevant and incompetent. The counsel for the Burroughs Company can choose for himself whether he wants to take the attitude of a traitor to his contractual al-

(Third) Deposition of Plaintiff's Witness Harry B. Wyeth, stipulated in from Burroughs case.

lies on the one hand, or of having lacked ordinary common sense in inquiring into the facts which were open to him on the other hand.

A. I have not knowingly attempted to evade any question which counsel has asked me. Neither have I made any claims as to what I told counsel for the Burroughs Company. On the contrary, I have stated several times frankly and again repeat with equal frankness that I am not willing to testify as to the details of what I may or may not have told personally to counsel for the Burroughs Company. During the time of making the license agreement with the counsel for the Burroughs Company and in the long period that followed when litigation was being carried forward, I had scores of conversations with our own counsel and a great many different conversations with counsel for the Burroughs Company, and all of these matters pertaining to the Felt model, the Felt patent, the Universal litigation and the entire situation were discussed from every conceivable attitude, and it would be absolute folly for me at this time to differentiate as to the exact details of what may or may not have been said in the conversations to which I have referred.

X-Q. 163. Mr. Wyeth, did you or did you not tell or disclose anything whatsoever to counsel for the Burroughs Company respecting Mr. Felt's 1890 model prior to November 4, 1904, the date at which Mr. Felt's deposition was begun?

By Mr. Munday: Objected to as a mere repetition.

A. If counsel desires, I will have repeated into the record my answer to the previous question. I cannot answer this question any more clearly than by the answer referred to. My entire testimony has been as to facts which were common knowledge to all concerned

(Third) Deposition of Plaintiff's Witness Harry B. Wyeth, stipulated in from Burroughs case.

with the Comptograph case at the time of the filing of the Burroughs brief.

X-Q. 164. Please bear in mind, Mr. Wyeth, that my question did not ask you anything about any details of conversations you may have had with counsel for the Burroughs Company or any details of the facts you may claim to have disclosed to said counsel; but inquires concerning the single fact as to whether or not, prior to the date named in the question, you ever told or disclosed to said counsel anything whatsoever concerning Mr. Felt's 1890 model. Can you not answer that question directly?

A. I refer counsel to my answers to X-Q. 157 and X-Q. 159 in which I say that I "have a distinct recollection of telling him that we had in our possession the first machine which Felt built embodying the invention in question. Just what details I told him with reference to this machine or the facts in question I do not now recall, and I should not wish to definitely state." I further stated "I never refused to answer any question which the counsel for the Burroughs Company asked me with reference to the case or to give him any information which he wished regarding same." I am not willing to answer or testify more fully than I already have as to dates and details of the matters referred to.

Mr. Rector: Answer is objected to as irresponsive to the question.

X-Q. 165. The questions I am now asking you, Mr. Wyeth, relate to a particular date, and the period of time prior to that date, for the reasons explained in X-Q. 162, and I should like to have answers to my question at the present point, without reference to what you may or may not have said in answer to earlier questions; and I again give you an opportunity to say whether or not you told counsel for the Burroughs Company any-

(Third) Deposition of Plaintiff's Witness Harry B. Wyeth, stipulated in from Burroughs case.

thing whatsoever concerning Felt's 1890 model prior to November 4, 1904. the date at which Felt's deposition was begun. Did you, or did you not?

By Mr. Munday: Objected to because the witness has repeatedly answered that he is unable to state what he told Mr. Rector concerning the matter inquired about. If he should not testify that he did or that he did not, it would be incompetent.

By Mr. Rector: Attention is called to the fact that the witness has not been asked to state *what* he told counsel for the Burroughs Company respecting the model in question, but whether he told him *anything* concerning it, prior to the date mentioned.

By Mr. Munday: Objection is repeated because the witness has already testified that he told Mr. Rector about the first Felt model machine. And this seems to be a mere grinding of what has already been through the mill.

A If the comsel wishes my personal opinion in this matter, I would say that I think it altogether probable that I did tell him a great many facts with respect to the matters in question, since our conversations on the subject were many and varied. I have said several times, however, and I again repeat, upon the record, that I am absolutely unwilling to swear or to testify under oath as to what I may or may not have told him in detail or the times of such statements, if any, for the reasons I have previous stated.

By Mr. Rector: The answer is objected to as irresponsive to the question.

X-Q. 166. Then, Mr. Wyeth, as I understand you, you are unwilling to swear that you told counsel for the Burroughs Company anything whatsoever concerning the Felt 1890 model prior to the date at which Mr. Felt himself testified about said model in the case in question. Is that the fact?

A. Please copy into the record as my answer to this question the last sentence of my previous answer. (The

(Third) Deposition of Plaintiff's Witness Harry B. Wyeth, stipulated in from Burroughs case.

answer reads as follows): "I have said several times, however, and I again repeat upon the record, that I am absolutely unwilling to swear to or testify under oath to what I may or may not have told him in detail or the times of such statements, if any, for the reasons I have previously stated."

By Mr. Rector: Answer is objected to as irresponsive to the question.

X-Q. 167 Mr. Wyeth, if counsel for the Burroughs Company should positively swear, in this case, that you never told or disclosed to him anything whatsoever concerning the old Felt 1890 model prior to the date at which Mr. Felt himself testified in the case in question, would you be willing, from your present knowledge and recollection of the matter, to contradict him under oath?

A. I hardly see how I can make more clear than I have already done, my inability to answer such questions of counsel as this last one. I have great respect for any statement which the counsel for the Burroughs Company might make, whether under oath or not, and certainly would not under oath contradict such a statement unless absolutely sure of my ground. I have stated several times and again repeat, for the benefit of counsel, my statement that I am unable and therefore unwilling to testify under oath as to what details of this matter I may or may not have told him, prior to the date he mentions. I might add that as I understand the matter, this would have absolutely nothing to do with the breach of contract by the Burroughs Company since, as I have repeatedly stated, my testimony is as to a breach of contract committed by them when their brief was filed in 1906 and as to the facts which their counsel should have known at that time.

By Mr. Rector: The answer is objected to as irresponsive.

(Third) Deposition of Plaintiff's Witness Harry B. Wyeth, stipulated in from Burroughs case.

X-Q. 168 You have not answered my question, Mr. Wyeth. Of course, you would not contradict the sworn statement of counsel for the Burroughs Company, or of any one else, unless absolutely sure of your ground, as you put it. What I wish to know is, whether, with your present knowledge and recollection of the subject, you would be or could be sure of your ground in contradicting such a sworn statement of counsel for the Burroughs Company as that mentioned in my last question. Would you be sure enough of your ground to contradict such sworn statement, if made?

A. The question of counsel is merely a repetition of his previous question and I therefore merely repeat my previous answer to the effect that I am unable and unwilling to testify under oath as to details and dates of what I may or may not have told to counsel for the Burroughs Company with reference to these matters.

X-Q. 169. In answer to X-Q. 152, you said that "during the time of making the license agreement with the counsel for the Burroughs Company" you had "many different conversations with counsel for the Burroughs Company." How many interviews or conversations did you in fact have with counsel for the Burroughs Company during the negotiations preceding the execution of a license contract, and what period of time did they cover?

A. I do not recall the exact number of interviews or the exact period of time. There were a number of interviews extending over a number of weeks or longer. If the counsel wishes the exact information on this point, I can probably obtain same with some little trouble to myself, by referring to diaries and records of that period.

X-Q. 170. Will you please do so and let us know tomorrow?

(Third) Deposition of Plaintiff's Witness Harry B. Wyeth, stipulated in from Burroughs case.

A. I will endeavor to do so with pleasure.

X-Q. 171. According to your present recollection, Mr. Wyeth, there were at least a half dozen of such interviews, were there not, extending over a period of a month or more of time?

A. That is my present recollection, but as stated, I will endeavor to obtain facts for counsel's benefit in answer to the question.

X-Q. 172. Now, Mr. Wyeth, will you please state whether or not, during any of these interviews you had with counsel for the Burroughs Company, prior to the execution of the license contract, you told or disclosed to said counsel, anything whatsoever concerning either the Felt 1890 model or the date at which Mr. Felt claimed to have made the invention covered by the patent upon which the license contract was to be made?

By Mr. MUNDAY: Objected to as immaterial for the reason, among others, that even the plea of the defendant herein shows that said defendant took benefit of the contract in question subsequent to the deposition of Mr. Felt in the suit that has been referred to, and the record further shows that the breach of contract with which defendant is charged was at a still later time.

A. I think it quite doubtful if I gave to counsel for the Burroughs Company any definite details in the matters referred to prior to the making of the license agreement, for it would certainly have been an unbusiness-like procedure on my part to have disclosed all details of the matter in question before there had been any specific contract of license. As I now recall, the counsel asked some general questions which I freely answered, and I do not recall his having asked any questions that I refused to answer. He took some time to investigate the Felt patent and finally signified his willingness to make the license agreement.

X-Q. 173. Then, according to your present knowledge

(Third) Deposition of Plaintiff's Witness Harry B. Wyeth, stipulated in from Burroughs case.

and recollection of the matter, you did not disclose to counsel for the Burroughs Company anything whatsoever concerning Mr. Felt's 1890 model, or the claimed date of his invention, prior to the execution of the license contract. Is that the fact?

A. I did not so state.

X-Q. 174. Then please state what the fact is?

A. I do not definitely recall exact details of what I may or may not have told counsel at that time. I have given my general impression and should be glad to be more specific for counsel's benefit if I was able to do so, but I frankly confess my inability to testify under oath as to exact details and dates of facts disclosed or not disclosed in any certain one or more of a series of conversations that extended over a period of several years.

X-Q. 175. Mr. Wyeth, you cannot evade my question by your reference to "details," for I have not asked you and am not asking you anything about details. You have testified that you had numerous interviews with counsel for the Burroughs Company during the negotion of the license contract and prior to its execution. What I now wish to know is whether, during any of said interviews or at any time prior to the execution of the contract, you disclosed to said counsel anything whatsoever concerning Mr. Felt's 1890 model, or concerning the fact that Mr. Felt's invention had been made, or was claimed to have been made, as early as the year 1890. Now, did you, or did you not?

By Mr. Munday: Objected to, first, as to counsel's reference to "evading." Counsel is not the arbiter of whether the witness is either answering or evading, nor is such comment upon the witness' testimony proper as coming from cross-examining counsel. Second, because the question has many times been answered, and its repetition appears to be only an effort to make it seem that the witness is unwilling to answer as to a matter that he has in fact answered fully upon.

(Third) Deposition of Plaintiff's Witness Harry B. Wyeth, stipulated in from Burroughs case.

A. I again repeat that I have no desire to evade any question of counsel and will freely answer any questions that he asks to the best of my knowledge. I cannot answer beyond my knowledge, and I have stated many times and again repeat that I am unable to state under oath just what was said to counsel for the Burroughs Company, or when it was said, with reference to the Felt invention, the date of such invention or other details of the matter.

By Mr. Rector: Answer is objected to as irresponsive to the question.

X-Q. 176. Then, Mr. Wyeth, you are not willing to swear that you disclosed to counsel for the Burroughs Company anything whatever concerning Mr. Felt's 1890 model or the date of his invention, during any of the interviews you had with such counsel prior to the execution of the license contract? Is that the fact?

A. I confess to counsel my absolute inability to answer this question any more clearly than I have already done.

X-Q. 177. Mr. Wyeth, if counsel for the Burroughs Company should testify under oath in this case that you did not, in fact, tell him or disclose to him anything whatsoever concerning Mr. Felt's 1890 model or the date of Mr. Felt's invention during the negotiations leading up to the execution of the license contract, would you, upon your present knowledge and recollection of the facts, be willing to contradict such testimony under oath?

A. I give to this question the same answer that I gave to X-Q. 167, but think it hardly necessary that same be again copied into the record.

X-Q. 178. Mr. Wyeth, if counsel for the Burroughs Company should testify under oath in this case that at the date of the execution of the license contract, he had

(Third) Deposition of Plaintiff's Witness Harry B. Wyeth, stipulated in from Burroughs case.

absolutely no knowledge or information of the making or of the existence of Felt's 1890 model, and absolutely no knowledge or information concerning the actual date or the claimed date of Mr. Felt's invention beyond that disclosed by the oath which Mr. Felt filed in the course of the prosecution of his application for his patent, in which oath Mr. Felt swore that he had completed his invention and reduced it to practice "many months prior to September 16, 1896," would you, or could you, upon your present knowledge and recollection of the facts, conscientiously contradict such testimony?

A. I should hesitate about contradicting any statement which the counsel for the Burroughs Company might make under oath, but I should not hesitate to state that if such a condition of ignorance existed on the part of the counsel for the Burroughs Company as that described in the question, it was entirely the fault of said counsel by reason of the fact that had he inquired with reference to the points mentioned, he could easily have ascertained the exact facts.

X-Q. 179. Mr. Wyeth, I quote the following from your answer to X-Q. 162:

> "During the time of making the license agreement with the counsel for the Burroughs Company, and in the long period that followed when litigation was being carried forward, I had scores of conversations with counsel for the Burroughs Company, and all of these matters pertaining to the Felt model, the Felt patent, the Universal litigation and the entire situation were discussed from every conceivable attitude."

Do you mean to say, Mr. Wyeth, or to convey the impression, that during any of your conversations with counsel for the Burroughs Company, or in the course of all of them together, "all of these matters pertaining to the Felt model, the Felt patent, the Universal lit-

(Third) Deposition of Plaintiff's Witness Harry B. Wyeth, stipulated in from Burroughs case.

igation and the entire situation were discussed from every conceivable attitude''?

A. Such was not the intention of my answer referred to. My thought was that during the entire series of conversations referred to, these matters were discussed in the manner mentioned. The balance of my answer to this question, which the counsel does not quote, explains what I mean, wherein I say that ''it would be absolute folly for me at this time to differentiate as to the exact details of what may or may not have been said in the conversations to which I have referred.''

X-Q. 180. I am not in any way interested in the conversation which you may have had with your own counsel, but I am very much interested in what you claim to have said in your conversation with counsel for the Burroughs Company. As I now understand you, you do not mean to say that in any of your conversations with the counsel for the Burroughs Company, or in all of them combined, ''all of these matters pertaining to the Felt model, the Felt patent, the Universal litigation and the entire situation were discussed.'' Is that the fact?

A. I shall be pleased if counsel will refer me to any point in either my direct or cross-examination where I have made any claims as to what I have said to counsel for the Burroughs Company upon these matters. On the contrary, I have repeatedly said that I could not attempt to say under oath just what I may or may not have said to him. I again repeat that statement in answer to this question.

By Mr. Rector: The answer is objected to as irresponsive to the question.

X-Q. 181. I will simplify my question by eliminating all the matters which you say were discussed in the course of the conversations mentioned by you in your answer to X-Q. 162, excepting one. Are you willing to

(Third) Deposition of Plaintiff's Witness Harry B. Wyeth, stipulated in from Burroughs case.

swear that during any conversations which you had with counsel for the Burroughs Company, either prior to the execution of the license contract or during the litigation which followed, "all of these matters pertaining to the Felt model" were discussed?

A. I again repeat what I have said so often before that I am unable and unwilling to testify under oath as to the details of what may or may not have been said on these points in my conversations with the counsel for the Burroughs Company. I will cheerfully tell counsel what I do know, but I cannot tell him what I do not know.

X-Q. 182. Are you willing to swear, Mr. Wyeth, that during any conversation you ever had with counsel for the Burroughs Company, either before the execution of the license contract, or after it, the fact that Mr. Felt claimed to have made his invention and embodied it in a model as early as the year 1890, was either discussed or referred to in any manner whatsoever?

A. I am not willing to swear that it was or was not so discussed or referred to. I respectfully repeat my answer to the previous question.

X-Q. 183. Did counsel for your company, to your knowledge, ever have any consultation or conversation with counsel for the Burroughs Company respecting the Felt patent and the license contract prior to the execution of the latter?

A. Not to my knowledge.

X-Q. 184. Did counsel for your company, to your knowledge, ever have any consultation with counsel for the Burroughs Company, concerning the suit of your company against the Universal Company on the Felt patent, and concerning the issues in question therein, during the time the record in that case was being made up?

A. That I am unable to say. I have recollection that

(Third) Deposition of Plaintiff's Witness Harry B. Wyeth, stipulated in from Burroughs case.

Mr. Clarke and Mr. Rector occasionally met at the Union League Club and on their way to the city in the morning, but just what was discussed in these conversations, or how many of them, if any, took place during the period to which the question refers, I cannot say.

X-Q. 185. Did you ever see Mr. Clarke and counsel for the Burroughs Company together at the Union League Club or on their way to the city in the mornings you have referred to?

A. I only recall one instance in which I saw them together at the Union League Club. I am not a member of the Union League Club and live on the opposite side of the city, so that I would not be apt to see such meetings, if any occurred. I recall that Mr. Clarke has mentioned several times in a casual way that he had seen or met Mr. Rector and had a word or two with him.

X-Q. 186. What was the single occasion on which you say you saw Mr. Clarke and the counsel for the Burroughs Company together?

A. I should perhaps more properly have said that I saw them meet at the club. The occasion to which I refer was at one time when I was lunching at the Union League Club with Mr. Clarke, and Mr. Rector was lunching there with Mr. Macauley.

X-Q. 187. What conversation did you observe Mr. Clarke and counsel for the Burroughs Company to have on that occasion?

A. I stepped from the table where we were sitting to the table where Mr. Rector and Mr. Macauley were sitting and chatted for a moment and Mr. Clarke followed me. I spoke with Mr. Macauley a moment or two and Mr. Clarke, I believe, spoke with Mr. Rector. The conversation was a very brief one.

X-Q. 188. Do you recall the date of the occasion you have just referred to?

(Third) Deposition of Plaintiff's Witness Harry B. Wyeth, stipulated in from Burroughs case.

A. I do not.

X-Q. 189. Were you ever present, at any time, at any meeting or consultation of any of your company's counsel with counsel for the Burroughs Company, at which the suit of your company against the Universal Company on the Felt patent or any of the questions or issues therein were discussed?

A. There were no formal meetings or discussions that I know of. At the hearing of the case against the Universal Company in the lower court, the counsel for the Burroughs Company was present and talked with our counsel more or less. I do not recall whether or not I distinctly heard or participated in any of such conversations.

X-Q. 190. I will confine my question to the period preceding the actual hearing of the suit in question in the Circuit Court. Were you ever present, at any time prior to said hearing, at any meeting or interview of your counsel with counsel for the Burroughs Company at which your company's suit against the Universal Company was discussed?

A. I do not now recall being present at any such meetings or interviews.

X-Q. 191. And so far as you know, no such meeting or interview ever occurred? Is not that the fact?

A. I have no personal knowledge of any such meetings or interviews. They may or may not have occurred.

Adjournment taken until tomorrow, Wedensday morning, at 10 o'clock A. M.

Met December 4, 1907, at 10 o'clock in the morning, pursuant to adjournment. Present as before.

X-Q. 192. Referring to cross-questions and answers 169 to 171 of your testimony on yesterday, Mr. Wyeth, have you ascertained the number of interviews you had

(Third) Deposition of Plaintiff's Witness Harry B. Wyeth, stipulated in from Burroughs case.

with counsel for the Burroughs Company during negotiations preceding the execution of the license contract?

A. In the short time at my disposal this morning I hurriedly examined the memorandum books that I referred to yesterday and found records of ten different interviews, the first of which was on October 27, 1903, and the last on January 15, 1904. The license agreement was signed about the latter date, and I therefore did not look later. As stated, my examination was a hurried one, but there were at least the number I have given.

X-Q. 183. Have you at hand the dates of the other interviews which occurred between the first and last interviews you have stated?

A. I have. They are November 16th, November 21st, November 26th, December 2nd and December 4th—all in 1903; and January 15th, January 16th, January 20th and January 23rd—in 1904.

X-Q. 194. Were you in the habit, during that period, of keeping a record of your interviews with counsel for the Burroughs Company?

A. I have for some years past kept a small pocket memorandum or diary which gives in the briefest possible manner a statement of important things that I did on such dates. This is the only record that I have of any interviews with counsel for the Burroughs Company.

X-Q. 195. In your answer to X-Q. 162, you stated that during the negotiation of the license contract, "and in the long period that followed when litigation was being carried forward," you had many different conversations with counsel for the Burroughs Company. Do you know how many such interviews you had with counsel for the Burroughs Company between the date at which the bill of complaint against the Universal Com-

(Third) Deposition of Plaintiff's Witness Harry B. Wyeth, stipulated in from Burroughs case.

pany was filed, which I believe was in January, 1904, and the date at which said cause was argued in the Circuit Court in May, 1905?

A. I do not.

X-Q. 196. Can you ascertain?

A. I think it very doubtful because I should have made no memorandum of such interviews unless I had specifically gone to his office for some definite purpose. In other words, the memorandum I keep is of what I regard the definite important matters of the day and does not pretend to record a chance meeting or a brief or casual conversation.

X-Q. 197. Can you state from memory how many interviews you had with counsel for the Burroughs Company during that period at which the suit of your company against the Universal Company was discussed?

A. I cannot.

X-Q. 198. Will your memorandum book covering that period show the number of times you called at the office of counsel for the Burroughs Company for the purpose of discussing the suit against the Universal Company?

A. It probably would give a very close record.

X-Q. 199. Will you please examine your memorandum book and state how many such calls and interviews you made and had during the period inquired about?

A. The memorandum books in question are at my office and I do not have them with me. I shall be pleased to examine them when I have the opportunity if counsel so desires.

X-Q. 200. I do so desire and will see that the opportunity is given you before the close of this examination.

X-Q. 201. In your answer to X-Q. 157, and in your answer to X-Q. 164, and perhaps elsewhere in the course of your cross-examination, you have stated that you "have a distinct recollection" of having told counsel for the Burroughs Company that you had in your posses-

(Third) Deposition of Plaint... s Witness Harry B. Wyeth, stipulated in from Burroughs case.

sion "the first machine which Felt built embodying the invention in question." Have you any recollection of having told comsel for the Burroughs Company the *date* at which Mr. Felt made or claimed to have made said machine?

A. I think I could refer to my previous cross-examination and find probably twenty places where counsel has asked me identically this same question and I have answered it in identically the same manner. I can only again repeat that answer.

X-Q. 202. It would be very much better and quicker to have a simple and direct answer to the question at this point. If you have, in fact, any recollection whatsoever of having told counsel for the Burroughs Company, at any time, the date at which Mr. Felt made or claimed to have made the machine in question, will you not please say so, here and now?

A. Answer repeated.

X-Q. 203. Near the latter part of your question 31, Mr. Wyeth, you quote the following statement of the brief of counsel for the Burroughs Company with reference to your testimony in the Universal suit:

> "His counsel did not ask him, and he did not say, what knowledge he had of the Pike machine prior to that time; and he was not cross-examined upon the subject."

You characterized this statement of the brief as unfair to you, and misleading, and calculated to give a false impression of the actual facts to the court. Why did you so characterize it?

A. The counsel has not quoted exactly what I said about the statement, for I did not intimate that it was unfair to me. I made the remarks I did because of the condition which I have previously stated, namely, that counsel for the Burroughs Company was presumed to be on our side of the case, was in our confidence, and any

(Third) Deposition of Plaintiff's Witness Harry B. Wyeth, stipulated in from Burroughs case.

statement he made to the court would therefore be taken by the court as coming from one who by reason of his position on the inside, must have a knowledge of the real facts. The court would, therefore, look upon such statement of counsel for the Burroughs Company as a true statement of the exact facts, and we would, of course, have no chance to disprove such statement of counsel for the Burroughs Company, and the court would give little weight to anything we might say in argument to contradict such statement of facts by the Burroughs counsel. In the statement referred to and quoted in the question which I am answering, the intimation is plainly made that Mr. Wyeth knew some facts which were not in the record, and that such facts would have been damaging to the Comptograph Company's case had they been put into the record. I considered and now consider that this statement was a most unfair and misleading one on the part of the counsel for the Burroughs Company in view of the condition of affairs with reference to his position in our camp as I have indicated above.

X-Q. 204. And you think the intimation conveyed by the extract from the brief which I have quoted was calculated to give the court a false impression of the actual facts, did you?

A. I think the intimation was calculated to mislead the court and to place the Comptograph Company in the attitude of having withheld facts that would be damaging if known.

X-Q. 205. And you think, do you, that such an intimation was not justified by the actual facts?

A. I do.

X-Q. 206. I quote the following from the brief in question:

> "Felt's counsel argue, from some letters introduced into the record (pp. 332-335) that no Pike ma-

(Third) Deposition of Plaintiff's Witness Harry B. Wyeth, stipulated in from Burroughs case.

chines were made or sold until after the filing of Felt's application in the Patent Office (May 31, 1898), and that, therefore, Pike's invention and patent cannot be held to have created any intervening rights affecting Felt. * * *

* * * * *

The letters upon which Felt's counsel base their inferential argument were letters written by Mr. Langhorne, secretary of the Burroughs Company, to Mr. H. B. Wyeth, in the year 1898. Mr. Wyeth was then sales agent of the Burroughs Company at Philadelphia, but is now manager of the complainant company and has produced the letters and introduced them on behalf of complainants. As will be apparent upon reading them, these letters simply show that the Burroughs Company did not have the Pike machine ready to supply in *quantities* until about the time the letters were written. They do not show, or indicate, that some machines may not have been made by hand (as is frequently done while awaiting the making of tools for the regular manufacture of machines in large quantities) and sold or introduced into use prior to the completion of the first lot of machines made from regular tools. Mr. Langhorne's letter of July 25, 1898 (p. 334), shows that the Burroughs Company was at that time *finishing* a lot of *one hundred* of the new machines, while his letter upon the following page shows that on the next day, July 26, 1898, several of such completed machines were shipped to Mr. Wyeth, or to customers for whom he had ordered them.

Mr. Wyeth's sole testimony upon the point is contained in his answer to question 13 on p. 331, in which he says that he actually received the first 'broad-frame' machine from the Burroughs Company in July, 1898, as indicated by the letters. His counsel did not ask him, and he did not say, what knowledge he had of the Pike machine prior to that time; and he was not cross-examined upon the subject."

Now, Mr. Wyeth, what knowledge did you in fact have concerning the Pike machine prior to your receipt of the

(Third) Deposition of Plaintiff's Witness Harry B. Wyeth, stipulated in from Burroughs case.

first of those machines from Mr. Langhorne's company in July, 1898?

A. I had absolutely no knowledge that is not clearly indicated in the letters that are in evidence in the Universal suit referred to. There had been a demand for wide-carriage machines for a long time, and I had done all I could to persuade the American Arithmometer Company to get out such a machine. They had replied to my efforts in the manner indicated by their letters of September 17, 1894, and November 19, 1894, which were to the effect that they were working upon a wide-carriage machine, but same was far from ready, and that they considered it would be quite a while before it would be ready for placing upon the market. I might add to those letters, the letter of February 15, 1895, which states distinctly "We hope to perfect the broad frame, and when this is done a carbon copy can be made, but we cannot say when the broad frame will be ready." I knew they were continuing to work upon the device, but the first machine that I ever saw with a wide carriage on ready for the market was the one that I received in Philadelphia at the time stated in my testimony, July, 1898.

X-Q. 207. Mr. Wyeth, did you preserve all the letters which you received from Mr. Langhorne, or his company, the American Arithmometer Company, during the period of your employment from 1894 to July, 1898?

A. I endeavored to do so.

X-Q. 208. In your testimony in the Universal suit, you produced, and there were introduced in evidence, four letters written to you by Mr. Langhorne, on behalf of his company, in the latter part of the year 1894 and the early part of the year 1895, and four additional letters written to you by him in June and July, 1898; and these were all. Did you receive any letters from Mr.

(Third) Deposition of Plaintiff's Witness Harry B. Wyeth, stipulated in from Burroughs case.

Langhorne or his company respecting the so-called broad frame or wide paper carriage machine between the early part of the year 1895 and June, 1898?

A. Not that I now recall. At the time when I produced the letters in evidence in the Universal suit, I spent a great deal of time going through my old records in a thorough search for any letters that would bear upon the broad frame, but those produced were the only ones that I found that referred to it in any direct manner—in fact I do not now recall finding any others that referred to the wide carriage in even a remote manner. I remember distinctly thinking when I failed to find these letters that it confirmed my recollection of the state of mind I was in when I received the first wide carriage machine in 1898. As I recall the matter, I had grown thoroughly tired waiting and looking for the wide carriage machines and had almost given up hope of seeing them, and for months before they came had considered the production of such machines as one of the promises that might be fulfiled some day. I was, therefore, surprised when I finally got the machine.

X-Q. 209. Mr. Wyeth, are you willing to swear positively that you did not receive other letters from Mr. Langhorne or his company directly referring to the broad frame machines prior to June, 1898; and by other letters, I mean letters other than those which you produced and which were introduced in evidence in connection with your testimony in the Universal suit?

A. It would seem to me that it would be the height of presumption for me to swear to such a thing as this which counsel has indicated after a lapse of eight or nine years. I can only say that I have no recollection of receiving any such letters and in the thorough search that I made through my records for such letters I failed to find any of them.

X-Q. 210. Then you do swear, do you, Mr. Wyeth,

(Third) Deposition of Plaintiff's Witness Harry B. Wyeth, stipulated in from Burroughs case.

that at the time you were going through your old letters in search of evidence to be used in the Universal suit, you did not find any letter from Mr. Langhorne or his company to you, referring directly to the broad frame machines, other than the letters which were produced and introduced in evidence in the Universal suit. Is that what you intend to do?

A. Counsel is putting his question very broadly. I am thoroughly willing to swear that in the search I referred to I found absolutely no letters that I considered gave any information or were of the slightest importance in connection with this broad frame matter. There may possibly have been some letters that referred to the wide carriage matter in an incidental way or in an indirect way, but I do not recall finding even any of these. To the best of my knowledge and belief, the letters produced and placed in evidence are the only ones I found in my records that referred in any way directly or remotely to the matter of wide carriage machines.

X-Q. 211. Did you submit to your counsel, in the Universal suit, any letters received by you from Mr. Langhorne or the American Arithmometer Company other than those which your counsel introduced in evidence in said suit?

A. I have no recollection of having done so.

X-Q. 212. The first of the letters received by you from Mr. Langhorne's company in 1898 being that dated June 20, 1898, begins as follows:

> "DEAR SIR: We have yours of the 17th with check for $250.00 payable for machine No. 2108, sold to Centennial National Bank, for which please accept thanks. It will be some time, how soon cannot tell, before the Sliding Carriage machines will be ready, so ship you to-day three standard machines."

Did the term "Sliding Carriage" in this letter refer to the same thing that has been mentioned as the "broad frame" and "wide paper carriage" machines?

(Third) Deposition of Plaintiff's Witness Harry B. Wveth, stipulated in from Burroughs case.

A. Yes.

X-Q. 213. And was this reference to such machines, in Mr. Langhorne's letter of June 20, 1898, the first reference that had been made to such machines in any letter from him or his company to you subsequent to his letter of February 15th, 1895, according to the best of your knowledge and belief on the subject?

A. Please refer to my answer to X-Q. 208.

X-Q. 214. Did you keep copies of the letters which you wrote to Mr. Langhorne or his company during the years 1894 to 1898, inclusive?

A. Not all of them.

X-Q. 215. To what extent or how generally did you keep such copies?

A. I kept copies of all letters that I wrote to the company from my main office in Philadelphia, but I traveled a great deal, in fact a large part of my time, and frequently wrote the company while I was at hotels or traveling, and of these letters I did not often keep a copy.

X-Q. 216. Have you ever made an examination of the copies of your letters to Mr. Langhorne and his company which you did keep, during the years 1894 to 1898, inclusive, to ascertain what reference any of them contained to the broad frame or wide paper carriage machine?

A. Yes, at the time when these letters were produced in evidence I spent some time in going through my old letter copy books which I then had in an effort to find anything that I had written which would bear upon the wide carriage matter.

X-Q. 217. Did you find any copy of any such letter written by you to Mr. Langhorne of his company during the year 1897, which referred to the broad frame or wide paper carriage machines?

(Third) Deposition of Plaintiff's Witness Harry B. Wyeth, stipulated in from Burroughs case.

A. I did not find any letters that I thought had any material bearing at all upon the matter of wide carriage machines. Had I done so, I should certainly have produced them as evidence in the case in question.

X-Q. 218. Do you remember whether you found any copies of letters written by you during the year 1897, to Mr. Langhorne or his company, which made any reference whatever to the broad frame or wide paper carriage machines?

A. My previons answer states that I did not find any letters that made any references to the wide carriage matter that I considered at all material. I may or may not have found letters which referred in an immaterial manner to wide carriage machines, but I have no recollection at this time of having found any such. By letters I mean copies of letters.

X-Q. 219. Did you find any copies of letters written by you to Mr. Langhorne or his company during the first five months of the year 1898, which referred in any way to the broad frame or wide paper carriage machine?

A. My answer to the previous question would hold also as an answer to this question.

X-Q. 220. That is to say, as I understand you, you do not remember to have found copies of any such letters written during the period mentioned in the question. Is that correct?

A. That is correct.

X-Q. 221. Now, Mr. Wyeth, what knowledge or information, derived from any source, had you during the years 1896, 1897 and the first five months of the year 1898 with respect to what the American Arithmometer Company was doing in the way of getting up a broad frame or wide paper carriage machine, or in the way of equipping its machines with such broad frame or wide paper carriage?

A. When I began selling machines for the Burroughs

(Third) Deposition of Plaintiff's Witness Harry B. Wyeth, stipulated in from Burroughs case.

Company in 1894, or shortly thereafter, Mr. Burroughs was working to invent a machine that would use a wide sheet of paper. At one time I think I recall having seen a model of a machine that he was making for that purpose. Mr. Burroughs was later taken sick and gave less and less time to his work at the factory. Just when Mr. Pike began his work in the line of equipping the Burroughs machine with a wide carriage I am not certain, but in a general way, I knew that he was working for some time prior to 1898 on a device to equip the Burroughs machine to use a wide sheet of paper. I do not think I ever saw any model of his, but on my various visits to the factory my recollection is that I was told by Mr. Pike and also by Mr. Langhorne that Mr. Pike was at work upon something in this line. In a very brief and general way, that is my knowledge of the subject referred to in the question.

X-Q. 222. How frequently did you visit the factory of the American Arithmometer Company during the year 1897?

A. I do not recall.

X-Q. 223. Would the memoranda book or books to which you have heretofore referred show how frequently you did visit the factory during the year 1897?

A. I have only kept such memorandum books for five or six years back.

X-Q. 224. Have you any data of any kind from which you can refresh your recollection as to how often you visited said factory during the year 1897?

A. I do not now recall having anything whatever that would do so.

X-Q. 225. What is your best recollection at the present time as to how often you visited that factory in the year 1897?

A. At the present time I have absolutely nothing to distinguish the year 1897 from any other year that I was

(Third) Deposition of Plaintiff's Witness Harry B. Wyeth, stipulated in from Burroughs case.

with the Arithmometer Company. A period of months would sometimes elapse between my visits to the factory, and again it might happen that I would be there several times at short intervals.

X-Q. 226. Judging the year 1897 by the other years of the period you were in the employ of the American Arithmometer Company, what would you say as to the number of times that you probably visited the factory of the company during that year?

A. I may have been there only once or twice during the year or I may have been there a half dozen times.

X-Q. 227. Do you remember whether or not you visited the factory of the American Arithmometer Company during the period from January 1, 1898, to June 1, 1898?

A. I do not remember whether I did or did not.

X-Q. 228. How many sales agents did the American Arithmometer Company have during the year 1897; and by that I mean how many regular agents did it have at one time?

A. I should say probably a dozen or twenty.

X-Q. 229. Do you mean by that that the company at that time had had as many as a dozen or twenty distinct territories, each in charge of a regular sales agent?

A. I should say that by the end of the year 1897 it probably had at least a dozen and possibly more. I am giving these figures from memory after a lapse of ten years upon a point which I have never considered of great importance nor tried to recall more definitely.

X-Q. 230. Of what territory did you have exclusive charge as sales agent for the American Arithmometer Company during the year 1897?

A. That I cannot answer exactly. My main office was in Philadelphia, and I had the State of Pennsylvania, but there were a number of shifts in my territory made at different times, and exactly what states were

(Third) Deposition of Plaintiff's Witness Harry B. Wyeth, stipulated in from Burroughs case.

included in that territory during the year 1897 I could not answer offhand.

X-Q. 231. But the State of Pennsylvania was not the only territory in your charge at one time during the year 1897, was it?

A. No. I had several other states in my charge.

X-Q. 232. I hand you a copy of the Pike patent No. 595,864, dated December 21, 1897, being the Pike patent referred to in the prosecution of the application for the Felt patent involved in this cause. Will you please look at that patent and state whether or not you are familiar with the machine shown and described in it?

By Mr. Muxday: Objected to as immaterial since the validity of the Felt patent is acknowledged by the defendant, and moreover, the Pike patent in question does not make any claim to this invention.

A. In a general way I am familiar with the machine described therein.

X-Q. 233. And how does the machine shown and described in this patent resemble or differ from the broad frame or wide paper carriage machine which you received from the American Arithmometer Company in July, 1898?

A. It appears to be, from my brief examination of the patent, substantially the same machine.

X-Q. 234. And it is substantially the same machine, is it not, as the broad frame or wide paper carriage Pike machine which you continued to receive from and sell for the American Arithmometer Company after July, 1898?

A. Apparently so.

By Mr. Rector: I offer in evidence the copy of the Pike patent submitted to the witness as a part of my cross-examination, and ask that the same be marked "Defendant's Exhibit Pike patent."

X-Q. 235. In your answer to X-Q. 206, Mr. Wyeth,

(Third) Deposition of Plaintiff's Witness Harry B. Wyeth, stipulated in from Burroughs case.

you say (italics mine), "The first machine that I ever saw with a wide carriage on *ready for the market* was the one that I received in Philadelphia at the time stated in my testimony, July, 1898." Had you not, prior to that time, seen one of Mr. Pike's broad frame or wide carriage machines, substantially like that shown in the Pike patent which has been called to your attention, either at the factory of the American Arithmometer Company at St. Louis or elsewhere? Please note that my question omits the qualification that the machine may or may not have been "ready for the market."

A. I have at this time no recollection whatever of ever having seen such a machine.

X-Q. 236. Were you not aware or informed, during the year 1897, that the American Arithmometer Company or Mr. Pike had in fact built one or more broad frame or wide paper carriage adding machines, or had equipped one or more regular Burroughs adding machines with such broad or wide paper carriage?

A. In my answer to X-Q. 221 I stated that "in a general way I knew that he (Mr. Pike) was working for some time prior to 1898 on a device to equip the Burroughs machine to use a wide sheet of paper. I do not think I ever saw any model of his, but on my various visits to the factory my recollection is that I was told by Mr. Pike and also by Mr. Langhorne that Mr. Pike was at work upon something in this line." I do not recollect that I had seen or heard anything more definite than this.

X-Q. 237. Were you not in fact aware or informed, during the year 1897, that Mr. Pike had actually completed one or more broad frame or wide paper carriage adding machines, and that one or more of such machines had been actually sold by the American Arithmometer Company during that year?

A. I have no recollection of anything of that kind.

(Third) Deposition of Plaintiff's Witness Harry B. Wyeth, stipulated in from Burroughs case.

X-Q. 238 Did you never learn, from credible sources of information, subsequent to 1897 and prior to the time you testified in the Universal suit, that such was the fact?

By Mr. MUNDAY: Objected to as obviously an improper question.

A. I have no recollection of anything of the sort.

X-Q. 239. Are you acquainted with Mr. John T. Langhorne, brother of the Mr. E. G. Langhorne who wrote you the letters in 1898 which have been referred to?

A. I am.

X-Q. 240. Were you acquainted with him in 1897 and 1898?

A. I presume that I was, although I do not recall now the exact date when I first met him.

X-Q. 241. Were you not aware or informed, during the early part of the year 1898, and prior to the first day of May of that year, that Mr. John T. Langhorne, as a representative of the American Arithmometer Company, was exhibiting that company's broad frame or wide paper carriage Pike machine in various cities of the country?

By Mr. MUNDAY: Objected to because it now appears that counsel for the Burroughs Company is seeking to justify the Burroughs Company's repudiation of the title of its licensor on the ground of information secretly possessed by the Burroughs Company and which was not communicated to its licensor.

A. My answer to X-Q. 236 replies to this question as well as to several previous ones that counsel has asked, but I have no objection to again saying that I had no knowledge of any such matters as those referred to in the last question.

X-Q. 242. You were located at Philadelphia in the early part of the year 1898, were you not?

(Third) Deposition of Plaintiff's Witness Harry B. Wyeth, stipulated in from Burroughs case.

A. I was.

X-Q. 243. Do you recall whether or not Mr. John T. Langhorne visited Philadelphia and saw you at any time in the early part of the year 1898, and prior to the first day of May thereof?

A. I have no recollection whatever of having seen Mr. John Langhorne in Philadelphia at the time mentioned.

X-Q. 244. And you have no recollection of hearing or being informed, at that time, to-wit, in the early part of the year 1898, that the said Langhorne was in the east, as a representative of the American Arithmometer Company, and had with him and was exhibiting one of its new broad frame or wide paper carriage adding machines?

A. I have not, and I will add for counsel's benefit that had I known or heard of anything of the sort I should have been exceedingly indignant and have gone upon record with a very prompt and emphatic protest by reason of the fact that I had been waiting so long and asking so vigorously for wide carriage machines that I should have felt very much as though I had been treacherously dealt with as an agent by the Arithmometer Company if they had not given me some of the very first wide carriage machines that they made or if they had made any public display or exhibition of such machines without my knowing it.

X-Q. 254. How vigorously had you been asking for wide paper carriage machines during the interim between Mr. E. G. Langhorne's letter of February 15, 1895, to you, and his letters to you in June, 1898, which were introduced in evidence in the Universal suit?

A. The question of counsel, as I understand it, is a quibble of words. The letters that have been quoted from show that I began asking for the machines as early as 1894 and continued to ask for them for quite an in-

(Third) Deposition of Plaintiff's Witness Harry B. Wyeth, stipulated in from Burroughs case.

terval. I have previously stated that my replies and satisfaction were so intangible that for a considerable period prior to the receipt of the machines in 1898 I had become discouraged and had almost given up looking for the machines except at some remote future date. I refer to my answer to X-Q. 208.

X-Q. 246. The letters which you produced and introduced in evidence in the Universal suit, which you say were all you were able to find, show that you made some inquiries concerning broad frame machines in 1894 and the early part of 1895; and so far as those letters show, you made no further inquiries concerning or request for any such machines for a period of more than three years. Under those circumstances, did you still consider it the duty and obligation of the American Arithmometer Company to supply you with the very first broad frame machines which it built and got ready for exhibition or sale?

By Mr. MUNDAY: Objected to since it does not appear that the American Arithmometer Company ever built a machine prior to the one that it supplied to the witness, and certainly there was no proof in the first suit against the Universal Company that any such machines had been supplied to anybody before that date. And if the counsel for the Burroughs Company knew of any such prior machine, there is no evidence showing that he did not conceal the fact carefully from the counsel for the Comptograph Company.

A. I certainly did. My testimony shows that I frequently talked with Mr. Langhorne and Mr. Pike about broad frame machines during the interval counsel has referred to and there is no question but that my desire and need for the wide frame machines was thoroughly known to the officers of the Arithmometer Company.

X-Q. 247. Did you talk to Mr. Langhorne and Mr. Pike about broad frame machines during the year 1897?

(Third) Deposition of Plaintiff's Witness Harry B. Wyeth, stipulated in from Burroughs case.

A. I doubt if I ever visited the factory and saw either Mr. Langhorne or Mr. Pike that the subject of broad frame machines was not broached in some way.

X-Q. 248. And it is your recollection, is it, that you did visit the factory a number of times during the year 1897, and did on those occasions talk with Mr. Langhorne and Mr. Pike about broad frame machines, and about your desire to have such machines for sale?

A. I have previously stated that I cannot answer specifically as to the dates of my factory visits, but my impression now would be that there was little doubt that I visited the factory during the year 1897 and mentioned broad frame machines to whomever I happened to see there at the time of those visits. Mr. Langhorne was sick a great deal and absent a considerable part of the time and I may or may not have seen him during the exact period of the year 1897.

X-Q. 249. Assuming now that you did visit the factory in 1897, and did talk to Mr. Pike or Mr. Langhorne, or both of them, about broad frame machines, do you mean to say that according to the best of your present memory on the subject they never at any time or on any such occasion showed you the work which Mr. Pike was actually doing on the broad frame proposition?

A. This is again a question that I have repeatedly answered, but I have no objection to repeating my answer for counsel's benefit. I have no recollection that I ever saw any model or a machine upon which Mr. Pike was actually working.

X-Q. 250. How large a factory did the American Arithmometer Company have in the year 1897?

A. This is a question that I should find it hard to answer with reference to a specific date. The American Arithmometer Company started their business at No. 240 Dickson street, St. Louis, as I remember, with a small handfull of men. They later moved to Twenty-first and

(Third) Deposition of Plaintiff's Witness Harry B. Wyeth, stipulated in from Burroughs case.

Wash streets, where they first had a part of one floor, then the whole of one floor, then an addition to that floor, and ultimately an entire factory building, which was increased once or twice. At just what stage of this increase they were during the year 1897, I should find it somewhat difficult to say after this lapse of time.

X-Q. 251. You remember, do you not, that its factory was located at the second address you have given, Twenty-first and Wash streets, St. Louis, in the year 1897?

A. My recollection is that it was.

X-Q. 252. And you also remember, do you not, that the entire space occupied by its factory at that time was confined to the second floor, or to a part of the second floor, of a two-story building belonging to Joseph Boyer or the Boyer Machine Company, the first floor of which was occupied by Mr. Boyer's shop for the manufacture of pneumatic tools?

A. Whether or not the Arithmometer factory was confined to a portion of the second floor of this building in the year 1897 I should not wish to state positively. The building was for a long time owned by Joseph Boyer and may still be owned by him for all I know. He did also, for a time, occupy the first floor in the manner stated by counsel.

X-Q. 253. And during the time the factory of the American Arithmometer Company was located on the second floor of this building, its offices were also located on the same floor and immediately adjacent to the space occupied by its factory, were they not?

A. Yes.

X-Q. 254. In the course of your answer to Q. 27, referring to the application by counsel for the Burroughs Company for leave to file a brief on behalf of that company in the Court of Appeals in the Universal suit, you say:

"Mr. Rector duly appeared in court and while we

(Third) Deposition of Plaintiff's Witness Harry B. Wyeth, stipulated in from Burroughs case.

protested vigorously against his obtaining permission to file the brief, yet the court finally granted the same."

Were you present in court on the occasion referred to?

A. I was.

X-Q. 255. Will you please state, then, whether or not the application of counsel for the Burroughs Company for leave to file the brief in question was vigorously opposed by counsel for the Universal Company, as well as your own counsel?

A. It was and it was to us very amusing to see the counsel for the Universay Company opposing so vigorously a brief which was to us so obviously intended to help them.

X-Q. 256. In your answer to Q. 11 of your direct examination, Mr. Wyeth, you say that immediately after the execution of the license contract, which was in January, 1904, your company "brought suit against the Universal Adding Machine Company of St. Louis, which was at the time of the bringing of the suit practically the only infringer." How may infringers were there—how many different makes of infringing machines upon the market—at the time the decision of the Circuit Court in the Universal suit was rendered, which you testify in your answer to Q. 25 was in January, 1906?

A. That is rather a difficult question to answer, because it is hard to say just when a certain machine may be said to be placed upon the market. So far as I know, the only machines that have infringed the Felt patent in issue up to this time have been the Burroughs, the Universal, the Wales, the Mallman and the Pike. Just when each of these attained sufficient prominence to be considered as upon the market it would be hard to say. Indeed, my judgment would be that it was very questionable whether or not one or two of them could with any

(Third) Deposition of Plaintiff's Witness Harry B. Wyeth, stipulated in from Burroughs case.

degree of fairness be said to be really upon the market even today.

X-Q. 257. Mr. Wyeth, did you or your company, during the period which elapsed between the decision of the Circuit Court in the Universal case, in January, 1906, and the hearing of the appeal in said suit by the Court of Appeals in April, 1906, make an effort to bring about a combination of the Comptograph, Universal, Pike, Wales, Mallman and Burroughs Adding Machine Companies, or some of them?

By Mr. Munday: Objected to as immaterial, incompetent and irrelevant.

A. No.

X-Q. 258. Did you not, during that period, interview counsel for the Burroughs Company, and propose such a project?

A. I at one time, the exact date of which I do not now recall, and it may or may not have been in the interval stated, called upon the counsel for the Burroughs Company to ascertain on behalf of an individual in New York, if a majority of the stock of the Burroughs Company could be purchased at a certain price. During the course of the conversation on this subject, the question of a combination between the various adding machine companies came up, and the counsel for the Burroughs Company expressed the idea that the Burroughs Company might favor something of the kind, provided they could dominate and control such combination. There was some talk between the counsel for the Burroughs Company and myself along this line, and as I recollect it, either a second interview on the subject or a conversation over the telephone, I am not certain which. The matter, so far as I know, went no further than this, so far as any effort of mine or our company was concerned.

X-Q. 259. As a matter of fact, Mr. Wyeth, have you not repeatedly or on quite a number of different occasions,

(Third) Deposition of Plaintiff's Witness Harry B. Wyeth, stipulated in from Burroughs case.

some of them during the period inquired about in my last question, interviewed counsel for the Burroughs Company and urged upon him the desirability of effecting a combination of the various different adding machine companies?

A. At the interview I have referred to, I certainly expressed myself to the effect that some getting together by the various adding machine companies would be a wise thing. I have no hesitancy in still expressing the same opinion, and I may have expressed such opinion to counsel for the Burroughs Company at other times than the one I have specifically mentioned. I should hardly say that I have gone so far as to urge that a combination be effected, and I certainly have made no efforts to bring about such a combination.

X-Q. 260. On each and every occasion when you discussed such a project with counsel for the Burroughs Company, did not said counsel say to you that he did not think any such a combination would be to the interest of the Burroughs Company and express himself unfavorably toward it?

A. As I recollect the matter, he did not, but on the contrary, expressed the opinion that such a combination might be advantageous to the Burroughs Company provided it could be made upon a proper basis.

X-Q. 261. Did you not call at the office of the counsel for the Burroughs Company, soon after the decision of the Circuit Court in the Universal case, and propose to and urge upon counsel for the Burroughs Company the project of bringing about a combination of the various adding machine companies?

A. No more so than I have indicated in my answer to X Q. 258.

X-Q. 262. Would the memorandum book or books which you say you have been keeping for several years show the dates of any calls which you made at the office

(Third) Deposition of Plaintiff's Witness Harry B. Wyeth, stipulated in from Burroughs case.

of counsel for the Burroughs Company, for the purpose of interviewing him with respect to the project of effecting a combination of the different adding machine companies?

A. They would probably show the dates of any calls I made upon the counsel for the Burroughs Company, but they would not show the purpose of such calls.

X-Q. 263. Will you please examine your memorandum book, before tomorrow's session of this examination, and ascertain the dates at which you had interviews with counsel for the Burroughs Company between January 24, 1906, the date of the decision of the Circuit Court in the Universal case, and April 26, 1906, the date of the hearing in the Court of Appeals?

A. With pleasure.

X-Q. 264. Now, Mr. Wyeth, at some period between January 24, 1906, and April 26, 1906, after you had interviewed counsel for the Burroughs Company respecting a project to effect a combination of the different adding machine companies, and after you had failed to receive from him any encouragement for such a project, did not you or your company in fact follow the matter up and endeavor to bring about a combination of some of the other adding machine companies under the cover and protection of the Felt patent here in controversy?

A. I object to the form of counsel's question, because he states as a fact that I called upon counsel for the Burroughs Company and urged a project for a combination and received discouragement upon same, whereas I have previously testified to the correct facts of this matter. In answer to the remaining part of the question, would say that neither I nor our company followed the matter up, nor did we endeavor to bring about a combination of some of the other adding machine companies, as he suggests. For the information of counsel, and in order that there may be no misapprehension on his part nor any

(Third) Deposition of Plaintiff's Witness Harry B. Wyeth, stipulated in from Burroughs case.

thought of a desire on my part to evade even indirectly a subject upon which he is evidently seeking information, I will say that we have been approached at several different times by different parties in efforts to effect various kinds of combinations among some or all of the various adding machine companies. We have always listened patiently to what these parties had to say, but have never committed ourselves in the slightest degree to their projects. We have always taken the attitude that we were in the adding machine business to make money and were always willing to discuss any legitimate plans that were proposed to accomplish this end.

X-Q. 265. In view of your disclaimer of any "effort" on the part of yourself or your company to bring about a combination of adding machine companies other than the Burroughs, such as that inquired about in my last question, I will ask you this question: Was there not, during the period between the decision of the Circuit Court and the hearing in the Court of Appeals in the Universal Company, a scheme or project on foot, with the knowledge and acquiescence and approval of your company, to effect a combination of such adding machine companies under the cover and protection of the Felt patent here in controversy?

A. During the time between the decision of the Circuit Court and the final decision by the Court of Appeals, we were approached by at least two different parties that I now recall, and I think three, with schemes for combination. These projects came to us absolutely unsolicited, and without the slightest effort or knowledge in advance on our part. As I have previously said, we absolutely refused to commit ourselves to any of them in any way. I have no knowledge as to what was done by these parties after they had interviewed us, but certainly their projects could not be said to have, in even a

(Third) Deposition of Plaintiff's Witness Harry B. Wyeth, stipulated in from Burroughs case.

remote degree, "the knowledge and acquiescence and approval" of our company.

X-Q. 266. Now, Mr. Wyeth, during the period between the decision of the Circuit Court in the Universal suit and the application of counsel for the Burroughs Company for leave to file a brief on behalf of that company in the Court of Appeals, were not certain persons, with the knowledge and acquiescence of yourself and your company, endeavoring to bring about a combination of the principal adding machine companies excepting the Burroughs, and including your own, under the cover and protection of the Felt patent here in suit?

By Mr. Munday: Objected to as having been several times answered.

A. I do not see how I can possibly reply to this question any more definitely than I have already done. I refer to my answer to X-Q. 265.

X-Q. 267. Mr. Wyeth, are you acquainted with a Mr. J. M. Miller, of Chicago?

A. I have met a Mr. Miller. His initials I do not recall.

X-Q. 268. Were you acquainted with that Mr. Miller, whatever his initials may be, in the spring of 1906?

A. The Mr. Miller I refer to is the one who I believe was at one time in the employ of the Mallman Company and later of the Burroughs Company. If this is the same gentleman counsel refers to, I believe I was acquainted with him at that time.

X-Q. 269. The Mr. Miller you refer to is the man I inquire about. Now, was not Mr. Miller, in the spring of 1906, endeavoring to promote or bring about a combination of the various adding machine companies other than the Burronghs, under the cover and protection of the Felt patent here in suit?

A. Mr. Miller was one of the parties whom I refer to

(Third) Deposition of Plaintiff's Witness Harry B. Wyeth, stipulated in from Burroughs case.

above as having approached us in the matter of a combination.

X-Q. 270. Now, will you not please state just what your dealings or negotiations with Mr. Miller were, during the spring of 1906, with respect to a combination of the various adding machine companies other than the Burroughs, under the Felt patent here in suit?

A. I have previously answered this question in my reply to X-Q. 265. I saw Mr. Miller as one of the parties I refer to in that answer.

By Mr. Rector: The answer is objected to as irresponsive to the question.

By Mr. Munday: The objection is obviously not well taken, as the answer is plainly a direct answer to the question.

X-Q. 271. Mr. Wyeth, did not Mr. Miller, during the spring of 1906, with the knowledge and acquiescence of yourself and your company, visit other adding machine companies, or the officers or representatives thereof, and propose to them a plan to combine said companies together under the Felt patent here in suit?

A. I again repeat that I have answered this question several times. I saw Mr. Miller, he proposed a consolidation scheme, or perhaps more properly a combination scheme, which I received in the way I have previously stated. I have no knowledge as to what other adding machine companies he saw, if any, and whatever he did in the matter was without either "knowledge" or "acquiescence" of our company.

Adjournment taken until 11 o'clock tomorrow, December 5th.

Met December 5th, Thursday morning, at 11 A. M., pursuant to adjournment. Present, as before.

X-Q. 272. Referring to the last preceding cross-question and answer, did not Mr. Miller, during the spring of 1906, with the knowledge and acquiescence of yourself and your company, visit the Universal Adding Machine

(Third) Deposition of Plaintiff's Witness Harry B. Wyeth, stipulated in from Burroughs case.

Company at St. Louis and interview the officers of representatives thereof respecting a project to bring about a combination of that company and your company and others under the Felt patent here in suit?

By Mr. Munday: Objected to as immaterial and irrelevant, and further, as not proper cross-examination. Because the Burroughs Company has been caught in a nasty mess affords no justification for this line of cross-examination.

A. I do not know whether or not Mr. Miller visited the Universal Adding Machine Company at St. Louis and interviewed the officers or representatives thereof. I again repeat very positively that if he did so it was without either the knowledge or the acquiescence of myself or our company. I might again repeat for counsel's benefit what I have explicitly said previously, that Mr. Miller called upon us and outlined some plan of combination which he had evolved. We listened, or rather I listened to what he had to say, as I make it a rule always to listen to any business man who wishes to present a business proposition. Beyond that I took absolutely no action in the matter.

X-Q. 273. Had you any information, in the spring of 1906, respecting a visit of Mr. Miller to the Universal Adding Machine Company at St. Louis, or any interview by him with the officers or representatives of that company either at St. Louis or elsewhere, respecting a project to combine the Universal Company and your company and others under the Felt patent here in suit?

A. I recall Mr. Miller's telling me that he either had seen or was going to see the other adding machine companies. As to whether or not he actually did see them or as to what he said to them, I have no definite information.

X-Q. 274. Did not Mr. Miller tell you, during the spring of 1906, that he had in fact seen the officers or

(Third) Deposition of Plaintiff's Witness Harry B. Wyeth, stipulated in from Burroughs case.

representatives of the Universal Company with respect to the project mentioned in my question?

By Mr. Munday: Objected to for the same reasons.

A. He may or may not have done so, and I should not wish to say definitely that he did or did not. He was always running over full of his project and very optimistic with regard to same.

X-Q. 275. Now, Mr. Wyeth, you will not deny, will you, that during the spring of 1906, while the appeal of the Universal case was pending, Mr. Miller, after having consulted you about this project and laid the plan of it before you, visited the Universal Adding Machine Company, or its officers or representatives, for the purpose of proposing said project to them, and that he in fact told you that he had done so?

By Mr. Munday: Objected to as immaterial and inconsequent and improper cross-examination.

A. I assuredly would not deny that Mr. Miller saw the officers of the Universal Company after he talked with me in the matter. He may have seen them every day for six months thereafter so far as I know, for I have absolutely no way of knowing whether he saw them or not. So far as his having told me that he had seen them, he may easily have done this also, for, as stated, he was very full of his project and very optimistic with regard to it, and made a vast number of statements on the subject as to what he could do or possibly as to what he had done.

X-Q. 276. Did Mr. Miller not also tell you, during the spring of 1906, while the appeal in the Universal case was pending, that he had interviewed the officers or representatives of the company manufacturing the Wales adding machine, with respect to the project mentioned?

By Mr. Munday: Same objection.

A. I recall seeing Mr. Miller at one time for a few

(Third) Deposition of Plaintiff's Witness Harry B. Wyeth, stipulated in from Burroughs case.

moments in New York City and believe he told me at that time that he was either on his way to Wilkes-Barre to see the Wales people or on his way from Wilkes-Barre after having seen them, I really have forgotten which.

X-Q. 277. Did Mr. Miller not also tell you, during the spring of 1906, and while the appeal in the Universal cale was pending, that he had laid his project of combining your companies and others under the Felt patent in suit before the officers or representatives of the Pike Adding Machine Company?

A. I have absolutely no recollection whether he did or did not tell me that.

X-Q. 278. Have you any recollection as to what he told you, at that time, with respect to his having presented the subject to the Mallman Adding Machine Company?

By Mr. MUNDAY: Same objection.

A. I have not.

X-Q. 279. How often did you see Mr. Miller during the spring of 1906, while the appeal in the Universal case was pending?

By Mr. MUNDAY: Same objection.

A. I really have no idea. When I first knew Mr. Miller he was in the employ of the Mallman Company, and later when I knew him he was in the employ of the Burroughs Company. As I recall the matter, I saw him and knew him quite a while before he ever mentioned any consolidation project. He was a salesman from the Chicago office of the Burroughs Company, and therefore usually in evidence more or less.

X-Q. 280. You saw him quite frequently, did you not, in the spring of 1906, on occasions when his project of combining your company and others under the Felt patent was discussed?

By Mr. MUNDAY: Same objection.

A. No, I should hardly say I did. I do not recall

(Third) Deposition of Plaintiff's Witness Harry B. Wyeth, stipulated in from Burroughs case.

discussing this project of consolidation with him but a very few times altogether.

X-Q. 281. When was it then that Mr. Miller "was always running over full of his project," and when was it that he "made a vast number of statements on the subject"?

By Mr. Munday: Same objection.

A. At the "very few times" when I saw him and discussed this matter.

X-Q. 282. Referring to your answer to X-Q. 272, in which you say that "Mr. Miller called upon us and outlined some plan of combination which he had evolved," will you please state what that combination was so far as it had any relation to the Felt patent here in suit?

By Mr. Munday: Same objection.

A. I do not recall the details of his plan and do not know that he had gotten so far as details, but in a general way, as I recollect, his idea was that the other adding machine companies or at least whatever ones of them he may have had in mind, should allow themselves to be brought out by the Comptograph Company, probably closing their own manufacture and devoting their capital and sales force and any patents they might have that were of value to a large company to manufacture and push the sale of the Comptograph machines. As stated, I think his ideas, when he saw me, were hardly perfected as to details, but I give in a general way my impression of what he had in mind.

X-Q. 283. Do you mean to say, Mr. Wyeth, that the plan or project of combination which he outlined to you contemplated the abandonment of the manufacture and sale of the Universal Machine and the Wales machine and the Pike machine and the Mallman machine, leaving only the Comptograph machine to be manufactured and sold by the new or enlarged or combined company?

By Mr. Munday: Same objection.

(Third) Deposition of Plaintiff's Witness Harry B. Wyeth, stipulated in from Burroughs case.

A. I do not know that Mr. Miller at any times specifically mentioned these various machines to me. In fact, as I recall it, he was always a little vague as to what machines he had in mind to consolidate. Upon one point, however, my impression is exceedingly clear, and that is that the fundamental basis of his plan was that all the absorbing was to be done by the Comptograph Company, and that they were to dominate the situation and that there were to be only two companies in the field, of any consequence, the Comptograph and the Burroughs.

X-Q. 284. Did you understand from Mr. Miller that his plan or project, which he outlined to you, contemplated the abandonment of the manufacture and sale of any one of the adding machines mentioned in my last question?

By Mr. Munday: Same objection.

A. The question is put in such a way that it seems to me to be absolutely impossible for me to answer in view of the circumstances. I have stated clearly that I do not recall just what machine or machines Mr. Miller may have mentioned specifically. He may or may not have mentioned one or all of those whose names are given by counsel. It certainly would be strange if he had not mentioned some of them.

X-Q. 285. You have apparently entirely misapprehended my question. Did Mr. Miller's plan or project, as outlined to you, and as you understood it at the time, contemplate the abandonment of the manufacture and sale of the machines then being manufactured and sold by any of the adding machine companies which he may have mentioned?

By Mr. Munday: Same objection.

A. It assuredly did as I understand same.

(Third) Deposition of Plaintiff's Witness Harry B. Wyeth, stipulated in from Burroughs case.

X-Q. 286. Did it contemplate the abandonment and sale of the Universal Adding Machine?

By Mr. MUNDAY: Same objection.

A. Please quote from my answer to X-Q. 284 as follows: "I have stated clearly that I do not recall just what machine or machines Mr. Miller may have mentioned specifically."

X-Q. 287. Did his plan as you understood it at the time, contemplate the abandonment of the manufacture and sale of the Wales Adding Machine?

By Mr. MUNDAY: Same objection.

A. Answer repeated.

X-Q. 288. Did it contemplate the abandonment of the manufacture and sale of the Pike Adding Machine?

By Mr. MUNDAY: Same objection.

A. Answer repeated.

X-Q. 290. Did it contemplate the abandonment of the manufacture and sale of the Mallman Adding Machine?

By Mr. MUNDAY: Same objection.

A. Answer repeated.

X-Q. 291. As a matter of fact, Mr. Wyeth, did it not contemplate, and do you not distinctly remember that it did contemplate, the continued manufacture and sale of either all or a number of these adding machines which had been mentioned, under the cover and protection of the Felt patent?

By Mr. MUNDAY: Same objection.

A. I refer to my answer to X-Q. 282.

By Mr. RECTOR: Answer objected to as irresponsive to the question.

X-Q. 292. And was not the proposed "absorption" of the other companies by the Comptograph Company, to which you have referred, the plan or means by which it was proposed to continue the manufacture and sale of the other adding machines in competition with the Bur-

(Third) Deposition of Plaintiff's Witness Harry B. Wyeth, stipulated in from Burroughs case.

roughs Adding Machine and under the cover and protection of the Felt patent?

By Mr. MUNDAY: Same objection.

A. Not as I understood it at all. I have endeavored to state quite clearly what my recollection of Mr. Miller's plan was. When he first mentioned the subject to me, he was in the employ of the Burroughs Company and my first thought was a suspicion that he was coming from the Burroughs Company in some way. I later recall thinking that his plan as I understood it was a very clever scheme to save for these other adding machine companies some of the money which they were sure to lose when finally shut up by the Felt patent. In other words, if these other companies allowed the litigation under the Felt patent to take its course, they would ultimately be forced to close down and could do nothing in the adding machine line except make roll paper machines. Whereas, if they now cast in their lot with Mr. Miller's scheme, they would secure an interest in an adding machine business that with only two companies in the field could not help but be very profitable. Therefore his argument was that his scheme would be a profitable one for these other companies. As stated, I recall that this idea appealed to me as rather a novel and clever way of putting the situation and one that might be considered reasonable by the other companies.

X-Q. 293. In other words, his plan contemplated the protection of the other companies against the consequences of litigation on the Felt patent. Is not that exactly it?

By Mr. MUNDAY: Same objection.

A. Not quite. His plan more nearly might be said to give to the other companies the chance that Davy Crockett's coon had. That is to say, to come down before he was shot. His plan as I understood it contem-

(Third) Deposition of Plaintiff's Witness Harry B. Wyeth, stipulated in from Burroughs case.

plated the absolute wiping out of the other companies and their business and merging same into the Comptograph Company.

X-Q. 294. Are you willing to swear, Mr. Wyeth, that, as you clearly understood it at the time, his plan contemplated the continued manufacture of the Comptograph machine alone by the new or enlarged Comptograph Company?

By Mr. Munday: Same objection.

A. No, I recall distinctly that one idea which he expressed was that there would be a chance for some machine to be made as a roll paper machine to compete with the Burroughs No. 1 and No. 4 machines which are roll paper machines.

X-Q. 295. Are you willing to swear, Mr. Wyeth, that Mr. Miller's plan, as you clearly understood it at the time, contemplated the continued manufacture of no other wide paper carriage machine than your company's Comptograph by the new or enlarged Comptograph Company?

By Mr. Munday: Same objection.

A. As I recall Mr. Miller's plan, or rather my understanding of same, the idea clearly was that ultimately only one wide paper machine would be made by the combination. Whether this would be the Comptograph as it stood at that time, or some other wide paper machine which would be developed by combining features from all the companies concerned, was never clearly stated, that I recall.

X-Q. 296. What did Mr. Miller's plan contemplate, with respect to the continued manufacture and sale of the several different styles of wide paper carriage machines then being manufactured by the several companies, until such time as a single wide paper carriage machine should be evolved and all others eliminated?

By Mr. Munday: Same objection.

(Third) Deposition of Plaintiff's Witness Harry B. Wyeth, stipulated in from Burroughs case.

A. My understanding was that this manufacture and sale was to be discontinued as rapidly as feasible. As I recollect the matter, one of his strong arguments was the economy of only one manufacturing and one selling organization.

X-Q. 297. But in the meantime, the manufacture and sale of the several different types of wide paper carriage machines, then being manufactured by the companies to be absorbed by the Comptograph Company, was to be continued, was it not?

By Mr. MUNDAY: Same objection.

A. I hardly see how I can make my answers to these questions any clearer than I have already done. I have stated several times that so far as I know Mr. Miller did not have the details of his plan fully worked out even in his own mind, and the few interviews that I had with him were made up almost entirely of my listening to his arguments and talk on the subject. I certainly have no recollection of ever discussing the question as to whether these other businesses would be discontinued in a week or a month or indeed any time except, as I have stated, "as soon as feasible".

X-Q. 298. Would it, in your judgment, Mr. Wyeth, have been a reasonable proposition, to have abandoned the manufacture and sale of all the other types of wide paper carriage machines they being manufactured by the companies which it was proposed to have absorbed by the Comptograph Company, immediately upon the absorption of the other companies by the Comptograph Company, and to have attempted forthwith to supplant those machines upon the market with the type of wide paper carriage machines which was then being manufactured and sold by the Comptograph Company?

By Mr. MUNDAY: Same objection.

A. That is a question that I did not consider I was

(Third) Deposition of Plaintiff's Witness Harry B. Wyeth, stipulated in from Burroughs case.

called upon to give any thought to. Mr. Miller called upon me with his scheme of combination and I listened to what he had to say, and as I have plainly said several times, went no further in the matter in any way. I have been stating what I recollected of some of the arguments that he gave to me, and I have not quoted them as my own judgment at all.

X-Q. 299. Would it, according to your judgment, at the present time, have been a reasonable business proposition?

By Mr. Munday: Objected to as incompetent as well as immaterial.

A. I certainly should not care to express my business judgment upon as large a proposition as this without giving it far more serious thought than I have done up to this time.

X-Q. 300. You have stated in an earlier part of your cross-examination, Mr. Wyeth, that you and your company never committed yourselves in any way to the plans or projects of the promoters who proposed to bring about a combination of your company with certain others. When Mr. Miller laid his plan and project before you, did you reject or disapprove it?

By Mr. Munday: Same objection.

A. I neither rejected nor disapproved it, nor did I accept it or approve it. I did nothing.

X-Q. 301. But without any protest or objection of any kind, did you allow Mr. Miller to go on with his efforts to bring about a combination under the plan and project which he had outlined to you, did you not?

By Mr. Munday: Same objection.

A. There was nothing to either protest or object about, nor was there the slightest question of my "allowing" Mr. Miller to do what he chose. I had absolutely nothing to do with the matter.

(Third) Deposition of Plaintiff's Witness Harry B. Wyeth, stipulated in from Burroughs case.

X-Q. 302. But Mr. Miller did, with your knowledge, go ahead with his efforts to bring about a combination of your company and the others in accordance with the plan he had outlined to you, did he not?

By Mr. Munday: Objected to as calling for mere hearsay evidence about an immaterial and inconsequential matter.

A. I don't know whether he did or not. I saw Mr. Miller a few times, as I have previously stated, and he usually had something to say about his project which led me to believe he was either thinking about it or working upon it in some way. What he did, when he did it, or whom he saw, or what he said, I know nothing at all about.

X-Q. 303. Mr. Wyeth, did you, or your company, or any one in its behalf, to your knowledge, during the time the appeal in the Universal case was pending in 1906, sign any memorandum or agreement or paper or instrument of any kind with reference to Mr. Miller's proposed combination of your company with other adding machine companies?

By Mr. Munday: Same objection.

A. Not to my knowledge.

X-Q. 304. Mr. Wyeth, have you ascertained from your memorandum book, how many interviews and the dates of them, you had with counsel for the Burroughs Company between the filing of the bill of complaint in the Universal suit in January, 1904, and the date on which said cause was argued in court in May, 1905, as requested in X-Q. 195 to X-Q 200?

A. I have and find my memorandum shows three interviews with counsel for the Burroughs Company, on April 18th, April 28th and May 4th, 1904.

X-Q. 305. Does your memoranda show what those interviews were about?

A. It does not.

(Third) Deposition of Plaintiff's Witness Harry B. Wyeth, stipulated in from Burroughs case.

X-Q. 306. Have you any recollection on the subject?

A. Yes. It was about this time that an interference case between the Burroughs Company and the Comptograph Company with reference to inventions by one Newman and Mr. Felt was settled, and I presume the interviews in question pertained principally to this matter.

X-Q. 307. Have you ascertained from your memorandum book the number and dates of the interviews which you had with the counsel for the Burroughs Company between January 24, 1906, the date of the decision of the Circuit Court in the Universal case, and April 26th, 1906, the date of the hearing in the Court of Appeals, as requested, in X-Q. 263?

A. I have. I find memorandum of three interviews in the period in question. On February 20th, February 27th and March 10th. Contrary to the usual custom with reference to these memoranda, I find the interview of February 27th has a little note to the effect that I saw counsel for the Burroughs Company with reference to keeping up the license fees under the license contract.

X-Q. 308. Will you not please explain more fully the subject of the interview which you have mentioned?

A. As I recall the matter, I went to counsel for the Burroughs Company and told him that while the license contract provided the Burroughs Company should pay no royalties between December 31, 1905, and the final termination of the first suit, yet inasmuch as the delays in prosecuting this first suit to a final determination had not been in any way our fault, and inasmuch as we had won such a sweeping victory in the case, with which we thought they ought to be as well satisfied as we were,—I told him that while they were under no legal obligations to do so, yet we considered that it would be a very graceful act on the part of the Burroughs Company if they should continue the payment of royalties until the

(Third) Deposition of Plaintiff's Witness Harry B. Wyeth, stipulated in from Burroughs case.

final determination of the first suit, instead of discontinuing the same, as they had a right to do.

X-Q. 309. Does your memorandum book show the subject of the other interviews which you had with counsel for the Burroughs Company, mentioned in your answer to X-Q. 307?

A. It does not.

Cross-examination closed.

Re-direct Examination by Mr. Munday.

R-D-Q. 310. You have been asked on cross-examination concerning the visit to you, of a promoter named Miller. I suppose this must have, in the mind of the counsel for the Burroughs Company, some relation to this license contract. Did you or your company, the Comptograph Company, ever in any manner, or at any time, encourage any other concern, person, firm or corporation to engage in or to continue in the use of the invention patented in the Felt patent in suit, or in any manner assent to such use; or give anybody to understand that they might acquire the right to use said invention? I refer to the broad frame adding machine.

A. No.

R-D-Q. 311. Your company—the Comptograph Company, complainant—after the favorable decision of the Circuit Court in the suit against the Universal Company had an opportunity to settle that suit, did it not?

A. Yes, we had an opportunity to settle the suit by granting a license to the defendant corporation in said suit.

R-D-Q. 312. Why did you not settle it?

A. We should have liked to do so, but could not in view of our license contract with the Burroughs Company.

R-D-Q. 313. Since your direct examination was closed,

(Third) Deposition of Plaintiff's Witness Harry B. Wyeth, stipulated in from Burroughs case.

have you found out whether of not A. J. Lauver, who is named as one of the directors of the Whales Adder Machine Company, is an officer in the Burroughs Adding Machine Company, and if so, please state what office he holds in said Burroughs Company?

A. I believe that Mr. Lauver is the assistant general manager of the Burroughs Company.

R-D-Q. 314. What reason have you to believe this?

A. I have been so informed within the last few days.

By Mr. Rector: The questions concerning Mr. Lauver are objected to as irrelevant and immaterial and the last answer is objected to as hearsay.

R-D-Q. 315. Did you ever see a copy of the Prospectus issued by the Felt & Tarrant Mfg. Co. in the latter part of 1891 and circulated then and subsequently, in which the Felt broad frame tabulator adding machine was mentioned as one of the assets and one of the valuable properties of that concern?

By Mr. Rector: The question is objected to upon the ground that it assumes the existence of facts concerning which there is no proof in this case.

A. Yes, I have seen such a prospectus. It is one of the printed documents to which I have referred several times in my previous examination.

R-D-Q. 316. The fact that Felt & Tarrant had issued such a prospectus, seeking to get money for the purpose of building and marketing the broad frame Felt machine after Mr. Felt had failed to induce the superintendent of the census in 1890 to adopt this machine, was a fact well known to all those engaged in the suit against the Universal Company on the Comptograph side thereof, was it not? And was a fact that might have been known to the Burroughs Company and its counsel, if it or he had seen fit to inquire about it? Is that right?

By Mr. Rector: The question is objected to as irrelevant and immaterial, as calling for a conclusion upon the part of the witness, and for further

(Third) Deposition of Plaintiff's Witness Harry B. Wyeth, stipulated in from Burroughs case.

reason that it appears from the testimony of the witness himself that he could not have had any personal knowledge concerning the issuing of said prospectus.

A. That is correct.

R-D-Q. 317. Did you ever have any personal interview with Joseph Boyer, president of the Burroughs Adding Machine Company, subsequent to the time when the breach of contract and the repudiation of title of the Comptograph Company to this inventon was made by the said Burroughs Company, or subsequent to the letter which the Comptograph Company wrote to the Burroughs Company further notifying said company of the recision of the contract of license?

A. Yes, I have had a number of personal interviews with Mr. Boyer or rather several such interviews since the date of the letter referred to.

R-D-Q. 318. At any of these interviews, did Mr. Boyer pretend in any manner that the contract of license was still in force?

By Mr. Rector: Objected to as irrelevant and immaterial.

A. I only recall at present one occasion when this contract of license has been mentioned by Mr. Boyer to me since the date of the letters referred to. I recall that shortly after the first of this year, a week or two after the annual meeting of the Burroughs Company, I called upon Mr. Boyer at his office in Detroit. In response to my inquiry as to how business was and what he considered the prospect for the Burroughs Company in the future, he replied that he thought the Burroughs prospects were excellent, provided, as he expressed it, "You do not shut us up with the Felt patent". As stated, I do not now recall the matter of the Felt patent being mentioned between Mr. Boyer and myself upon any other occasion than this one.

(Third) Deposition of Plaintiff's Witness Harry B. Wyeth, stipulated in from Burroughs case.

R-D-Q. 319. Did the Burroughs Company ever write to the Comptograph Company or to you, or send any word or make any statement prior to the beginning of this suit which would enable you to say what its intention was with respect to this license? In other words, did it every claim, to your knowledge, that the license was still in force after its recision?

By Mr. Rector: Question is objected to as not germane to the cross-examination of the witness, therefore not proper re-examination; and also as leading and argumentative.

A. They did not. On the contraary, we thought we had every reason to believe that the Burroughs Company agreed with us that the license contract stood revoked, for the reasons that I have indicated in my answer to Q. 42.

Re-Cross Examination.

R-X-Q. 320. Referring to your answer to R-D-Q. 318 of your re-examination, Mr. Wyeth, you have known Mr. Boyer for many years and have always been and now are on friendly terms with him. Is that not the fact?

A. That is correct.

R-X-Q. 321. And on the occasion mentioned in your said answer, your inquiry of him concerning the prospects of the Burroughs Company was made for the purpose of obtaining his honest and candid opinion, for your benefit, as to the value of the stock of the Burroughs Company, was it not?

A. That is correct, and that is, I think, why the remark so impressed itself upon my mind at the time, because the Felt patent and the matter of the Burroughs license was not in my thought at all and Mr. Boyer's mentioning the subject as he did, seemed to indicate that the subject was one that was more or less prominent in his own mind.

(Third) Deposition of Plaintiff's Witness Harry B. Wyeth, stipulated in from Burroughs case.

R-X-Q. 322. At the time of the interview referred to, you controlled, as the executor of your father's estate, some three thousand shares of the stock of the Burroughs Adding Machine Company, did you not?

A. That is correct.

R-X-Q. 323. And you were at that time contemplating offering some of that stock for sale, were you not?

A. I was considering whether or not I had better offer any of it for sale.

R-X-Q. 324. And you asked Mr. Boyer's advice upon that subject, or his opinion as to what the stock was really worth, did you not?

A. I endeavored to obtain from him, as president of the Burroughs Company, information that would enable me to form my opinion as to the value of the stock. I cannot say that I asked his opinion upon the subject of the value of the stock, for I felt that I already knew what he thought of it.

R-X-Q. 325. And what did you think that you knew he thought of it?

A. As president of the Burroughs Company and its largest stockholder, he could hardly have any but a favorable opinion as to the value of the stock. At least I felt that way.

R-X-Q. 326. Now, Mr. Wyeth, was not Mr. Boyer's remark to you concerning the Felt patent, on the occasion referred to, distinctly and clearly a jocular one as you actually observed it and as it impressed you at the time?

By Mr. MUNDAY: Objected to since the word "jocular" is a very uncertain one.

A. I think there is no doubt but that Mr. Boyer made the remark in question with a smile on his face and in more or less a joking way. As stated previously, however, it impressed itself very forcibly on my mind, because I was not thinking of the subject at all and the

(Third) Deposition of Plaintiff's Witness Harry B. Wyeth, stipulated in from Burroughs case.

remark showed clearly at the time what he was thinking of.

R-X-Q. 327. Do you recall, Mr. Wyeth, whether the occasion of your interview with Mr. Boyer was before or after the filing of the bill of complaint in the present suit?

A. It was before the filing of the bill in the present suit.

Re-cross examination closed.

Adjournment taken until 10 o'clock, Saturday, December 7th.

Met December 7th at 10 o'clock in the morning pursuant to adjournment. Present, as before.

Deposition of Plaintiff's Witness, H. L. Clarke, stipulated in from Burroughs case.

And thereupon, HENRY LOVE CLARKE, a witness on behalf of the Comptograph Company, being first duly sworn, testified as follows:

Direct Examination by Mr. Munday.

Q. 1. What is your name, age, residence and occupation?

A. Henry Love Clarke; age thirty-three; residence, Chicago; occupation, patent lawyer, of the firm of Munday, Evarts, Adcock & Clarke.

Q. 2. Mr. Clarke, you were associated with me personally in the preparation of the record and in the argument both before the Circuit Court and the United States Circuit Court of Appeals in the case of the Comptograph Company, complainant, and the Universal Adding Machine Company, impleaded as the Universal Accountant Machine Company, were you not?

A. Yes.

Q. 3. Do you recall the circumstance of Mr. Edward Rector, the counsel for the Burroughs Adding Machine Company, having notified us of his intention to ask leave

Deposition of Plaintiff's Witness, H. L. Clarke, stipulated in from Burroughs case.

of the Court of Appeals to file a brief *amicus curiae* on behalf of the Burroughs Adding Machine Company in that court?

A. Yes, he advised me personally that he wished to do so and asked me whether we would consent to his doing it.

Q. 4. What did you tell him?

A. When he first so advised me, I told him that I thought we would not consent, but that I would consult with you, Mr. Munday, about it and communicate with him further. And I afterwards told him that we would not so consent.

Q. 5. Were you present at an interview and conversation that took place in Mr. Rector's office a little while after that, when Mr. Rector and I were present?

A. Yes.

Q. 6. Just state when that conversation was with reference to the filing of the brief by Mr. Rector.

A. It was very shortly, that is within a day or two, after Mr. Rector telephoned me, as I have said, and before he asked leave of court to file the brief he proposed to prepare.

Q. 7. State the conversation that took place at that interview, as nearly as you can state it.

By Mr. Rector: Objected to as irrelevant and immaterial.

A. You, Mr. Munday, said to Mr. Rector that you and I had considered his request for consent to the filing of a brief *amicus curiae* in behalf of his client, the Burroughs Adding Machine Company, the licensee of our client, the Comptograph Company, under the Felt patent in controversy, and that we were not disposed to consent to the filing of such a brief, and would like to know why he proposed to do it. Mr. Rector gave no clear reason for wishing to file the brief and no intelligible explanation of what the brief was proposed to be. Mr.

Deposition of Plaintiff's Witness, H. L. Clarke, stipulated in from Burroughs case.

Munday then said that we were, as he had already indicated, absolutely unwilling that any such brief should be prepared or filed, because whatever Mr. Rector might have to say in such brief, with respect to facts either in or out of the record, or in argument about such facts, would necessarily appear to the court as coming from ourselves, or from one who, as counsel for our licensee, had throughout the litigation been so closely identified with our client and its interests, that anything he might say must be presumed by the court as coming from one who had inside information as to the complainant's whole case, and we were convinced, from Mr. Rector's request and the vague explanation or lack of explanation that he offered for it, that he actually intended to prepare a brief against the patent for the purpose of seeking to relieve his client from the payment of the increased royalties it would be obliged to pay the Comptograph Company if the decision of the lower court was affirmed; that such an act on his part had the further aspect of making it appear to the court, regardless of what arguments he might advance, that there was dissension between the licensor and licensee under the patent and that his client was deliberately seeking to repudiate or covertly attacking, the validity of the patent, which it had theretofore by both word and act acknowledged. Mr. Rector declined to withdraw from his proposal to prepare and file the brief. Mr. Munday then told him that he regarded the act as one of absolute bad faith and business treachery on the part of his client and himself. Mr. Rector, I recall, smiled and made the remark: "I see you think you have the milk in the pail, and I am going to kick it over". Mr. Munday replied that that was exactly what was plainly the case, that Mr. Rector and the Burroughs Company were merely seeking to do what they could in an effort to avoid the payment of the large increase in the royalties, and that the act would be an absolute

Deposition of Plaintiff's Witness, H. L. Clarke, stipulated in from Burroughs case.

breach of faith and one for which Mr. Rector and the Purroughs Company must take the consequences. Mr. Rector then again refused to withdraw or recede from his proposition to prepare and file the brief, and said he would ask leave of court to do so. That was the substance of the interview.

Q. 8. Mr. Clarke, your last answer implies that I asked Mr. Rector not to file the brief. Please state whether or not I did ask Mr. Rector not to file the brief.

A. Yes, you in fact expressly requested him not to prepare his proposed brief, or any brief, and you did so, after giving him the reasons for your objections to his doing so, as I have stated, and before you expressly charged that the act would be one of bad faith on the part of his client and himself.

Q. 9. He went on and filed the brief, did he not, of which this Complainant's Exhibit, Rector's Brief, is a copy?

A. Yes, that is a copy of the brief that he went on and prepared and filed.

Q. 10. Then you and I working together wrote an answering brief, of which this Complainant's Exhibit Reply Brief is a copy; is that right?

A. Yes, that is a copy of the reply brief.

Q. 11. These two briefs, Mr. Rector's brief and our reply brief, were duly and seasonably filed in the United States Circuit Court of Appeals for this Seventh Circuit, were they not?

A. Yes.

Q. 12. Do you know whether Mr. Rector received a copy of this Complainant's Exhibit Reply Brief?

By Mr. RECTOR: Objected to as irrelevant and immaterial.

A. Yes, I personally took to his office and handed to him a couple of copies of this reply brief as soon as we received it from the printer; and I further recall that

Deposition of Plaintiff's Witness, H. L. Clarke, stipulated in from Burroughs case.

Mr. Rector was in court during the argument of the case before the Court of Appeals, and that I saw in his hand a copy of the same brief and that after the argument he came up and made some remark about the brief to me. And he subsequently, within the next day or two, wrote us a letter about some detail of this reply brief.

Cross-Examination by Mr. Rector.

X-Q. 13. You recall the fact, do you not, Mr. Clarke, that, aside from the informal notice or request which Mr. Rector made of you by telephone, he gave you or your firm, formal notice in writing of his intention to make application to the Court of Appeals, at a certain time named in the notice, for leave to file a brief on behalf of the Burroughs Adding Machine Company in the case you have referred to?

A. Just before you made your motion for such leave, you sent us a notice in the usual form, of the time and place of the motion for leave to file a brief in behalf of the Burroughs Company.

X-Q. 14. And in response to that notice you and Mr. Munday appeared in court and opposed the motion, did you not?

A. Yes.

X-Q. 15. And counsel for the Universal Adding Machine Company likewise appeared in court, at the same time, did they not, also opposed the motion?

A. They appeared in court and had something to say in apparent opposition to the motion, but whether it was any real opposition I could not make up my mind.

X-Q. 16. Was the interview which you and Mr. Munday had with Mr. Rector, at the latter's office on the occasion described by you, held at Mr. Rector's request?

A. No, we went there of our own motion, after Mr. Rector had informally told us that he wanted to prepare this brief.

Deposition of Plaintiff's Witness, H. L. Clarke, stipulated in from Burroughs case.

X-Q. 17. As a matter of fact, Mr. Clarke, Mr. Rector's informal request of you for leave to file a brief in the case, to which you have referred, was really simply an informal notice from him to the effect that he intended to file such a brief, or to ask leave to file such a brief, accompanied by an inquiry as to whether you would consent or object to the filing of it?

A. It was an informal statement that he wanted to file a brief in the case on behalf of the Burroughs Company and would like to know whether we were willing to have him do so, or would consent to his doing so.

X-Q. 18. Referring to your statement in your answer to Q. 7, Mr. Clarke, to the effect that Mr. Rector "had throughout the litigation been so closely identified with our client and its interests," etc., have you any knowledge of Mr. Rector's ever having had any consultation or conversation with Mr. Munday concerning the litigation in question at any time during its progress up to the final hearing in the Circuit Court?

A. Yes, I recall having personally talked with Mr. Rector on a number of occasions, both before and after the hearing in the Circuit Court about the case, when he knew that I was associated with Mr. Munday in the entire matter and that any conversation had with me was virtually consultation with Mr. Munday. I never happened to be present during any conversation between you and Mr. Munday personally, prior to the day of the hearing in the Circuit Court, but I recall that both before and throughout that hearing, you were talking with Mr. Munday about the case while I was waiting to open the argument and making the opening argument. What other conversations you may previously have had with Mr. Munday about the case I do not personally know.

By Mr. Rector: All of the answer excepting the words "I never happened to be present during any conversation between you and Mr. Munday person-

Deposition of Plaintiff's Witness, H. L. Clarke, stipulated in from Burroughs case.

ally prior to the day of the hearing in the Circuit Court,'' is objected to as irresponsive to the question.

X-Q. 19. Mr. Clarke, do you think you could answer this question directly and responsively? Have you any knowledge whatever of Mr. Rector ever having seen Mr. Munday, at any place or at any time or on any occasion, between the date of the filing of the bill of the complainant in the Universal case and the hearing of that case in the Circuit Court?

By Mr. MUNDAY: Objected to as not proper cross-examination, it not being germane to the direct examination.

A. I am willing to answer any reasonable question that counsel chooses to ask, but I do not think it necessary for counsel to preface his questions with any expression of opinion on his part as to whether my answers are responsive or not. He is not the court.

Answering the question, I have no knoweldge of any such conversations, if by knowledge, counsel means to ask whether I was personally present during them; but I do recollect that on various occasions during the pendency of the case in the Circuit Court, and before its hearing, I have heard Mr. Munday from time to time remark that he had seen Mr. Rector and something or other about the case had been spoken of between them specifically, what or when, I do not remember further than I have stated, and my impression is that all such instances were merely informal and possibly casual.

By Mr. RECTOR: The answer is objected to as irresponsive to the question.

X-Q. 20. Mr. Clarke, have you any knowledge of Mr. Rector's ever having been in your office or Mr. Munday's office at any time during the progress of the litigation in the Universal case, or in fact, at any time prior to the be-

Deposition of Plaintiff's Witness, H. L. Clarke, stipulated in from Burroughs case.

ginning of Mr. Wyeth's deposition in the present case last week?

A. I do not remember any instance, but my own office was in another building throughout the period of the pendency of the Universal suit, and my answer has reference, therefore, to only the occasions on which I happened to be at Mr. Munday's office at that time. I was not then connected with Mr. Munday's firm or his offices.

X-Q. 21. Was Mr. Rector, to your knowledge, ever present at the taking of any of the testimony in the Universal case?

A. I do not remember that he was ever present during any of the depositions that I attended. He spoke to me on several occasions about these depositions during the making of the record, and appeared to be following them, but my impression is that familiarity with them had come from reading the originals as they were filed in court rather than from in any instance personally attending them.

By Mr. RECTOR: All of the answer excepting the first sentence thereof is objected to as irresponsive, volunteered and argumentative.

X-Q. 22. Was Mr. Rector, to your knowledge, ever supplied with any copy of any testimony taken on either side in the Universal case, prior to the final closing and printing of the proofs therein?

A. I do not know. I only remember that he was always given any information that he asked for.

X-Q. 23. Coming now, Mr. Clarke, to the consultations or conversations which you say you personally had with Mr. Rector during the progress of the Universal litigation, please state where those consultations or conversations occurred. I refer to any consultations or conversations that may have occurred prior to the hearing of the case in the Circuit Court, at which hearing you have testified Mr. Rector was present.

Deposition of Plaintiff's Witness, H. L. Clarke, stipulated in from Burroughs case.

A. A number of them were informal talks that I had with you when I happened to meet you on your way down town in the suburban train we both use and when I happened to meet you in the Union League Club where we both frequently lunch, and I also specifically remember one instance during the pendency of the Universal suit, and before you suggested filing the brief for the Burroughs Company, that I was in your office for some purpose, I do not remember specifically what, in connection with the case, and as I was about to leave you detained me for a short time and drew me into conversation with respect to the force and effect of the alleged defenses of prior use or sale of the Felt invention in controversy, and I expressed to you my belief that there was nothing in such alleged defense and that it would be disposed of by the court as it subsequently was disposed of. Another conversation that I had with you, I do not recall the precise time or place of, but I think it was while we were both on our way down town, related to the testimony the defendant had taken in the case about the alleged anticipating reference, the old Huber German patent, and I recall telling you of the manner in which the defendants' expert had amusingly come back to his deposition each morning for four or five mornings with a new scheme for supplying such old Huber machine with adding mechanism that would work, and then had been forced to admit that each one of his ingenious contrivances could not work. In short, in all of these informal talks, both you and I were in the attitude toward each other of being on the same side of the same case, and I therefore remember the substance and occasion of the instances I have mentioned.

X-Q. 24. My question inquired particularly with reference to any conversations you may have had with Mr. Rector prior to the hearing of the Universal case in the Circuit Court, as I am concerned solely with any such

Deposition of Plaintiff's Witness, H. L. Clarke, stipulated in from Burroughs case.

conversations which you may have had with him during the making up of the record in the Universal case. Do you not distinctly remember, Mr. Clarke, that the interview with Mr. Rector at the latter's office, which you speak of, was after the hearing in the Circuit Court, and after defendants' briefs raising the defenses which you mention had been filed?

A. I only remember that it was prior to the decision of the case by the Circuit Court. Whether it was subsequent to the hearing in the Circuit Court I do not remember. It may have been.

X-Q. 25. Do you remember whether the other conversation which you had with Mr. Rector, and in which you say you discussed the testimony of defendant's expert with him, was before or after the close of proofs in the case?

A. I remember that it was prior to the hearing in the case, because Mr. Rector was present during the opening argument in which I detailed that particular matter to the court and thereafter there would have been no occasion for my going over it to him in the way that I did. I also know that it was in that conversation you spoke of having looked over the depositions taken by the defendant, and that I understood you had seen them in the office of the clerk of the court, but whether you saw them there or elsewhere I do not know, nor did you say. Whether all of the depositions in the case had been taken at that time I do not remember.

X-Q. 26. Mr. Clarke, are you willing to swear that on any occasion whatever, between the date of the filing of the bill in the Universal case and the close of proofs therein, you had as much as five minutes' conversation with Mr. Rector concerning said case.

A. I was never sufficiently interested in the duration of the conversations to time them, but I would estimate that some of them begun on an Illinois Central train be-

Deposition of Plaintiff's Witness, H. L. Clarke, stipulated in from Burroughs case.

fore it reached Van Buren street station and continued until you and I had walked together to Dearborn and Jackson boulevard, where we separated to go to our respective offices, must have occupied more than five minutes. The meetings in the Union League Club that I referred to were for only a moment or two at a time with one exception that I remember, when we talked somewhat longer about this case and another matter. The meeting in your office was considerably longer and differed from the other chance meetings in that I had gone to your office on some matter connected with this suit and that as I was leaving you detained me in the manner I have stated.

X-Q. 27. How frequently, Mr. Clarke, did you meet Mr. Rector on the Illinois Central train and walk up town with him during the period inquired about in my last question?

A. Several times that I remember, and the other chance meetings were more frequent.

HENRY LOVE CLARKE.

Counsel for the Comptograph Company here offers in evidence the amendment to the answer made by the defendant in the case of the Comptograph Company against the Universal Company.

By Mr. RECTOR: I object to the introduction in evidence of the copy in question on the ground of irrelevancy and immateriality, but, subject to correction if any error be found, waive proof of the authenticity of the copy.

By Mr. MUNDAY: The copy referred to is in the following words and form:

"CIRCUIT COURT OF THE UNITED STATES, NORTHERN DIVISION OF THE NORTHERN DISTRICT OF ILLINOIS.

Comptograph Company,
Complainant,
vs.
Universal Accountant Machine Company and Reuben E. Spangler,
Defendants.
} In Equity. No. 27090.

"AMENDMENT TO ANSWER.

Plaintiff's Exhibit Copy of Amendment to Answer in Universal Case, stipulated in from Burroughs case.

"Now comes defendants in the above entitled case, by their solicitors, and ask leave of this Honorable Court to amend their answer heretofore filed in this case as follows:

"By inserting, after the paragraph ending with line 5, page 12 of defendants' answer as printed in "Defendants' Record of Pleadings and Testimony," the following:

"Further answering, defendants aver that the alleged improvement or improvements, the subject-matter of said letters patent, particularly the improvement or improvements, the subject-matter of claims 1, 2 and 4 of said letters patent, are fully disclosed and described in a printed publication published at Chicago, Illinois, being a newspaper entitled "The Chicago Sunday Tribune," said newspaper having been published January 12, 1890, and more than tyo years before said Dorr E. Felt filed his application for the patent in suit, being United States Letters Patent No. 628,176, dated July 4, 1899, application for which was filed in the United States Patent Office May 31, 1898, and the said description of said invention forming the subject-matter of claims 1, 2 and 4 of said letters patent being accompanied by an illustration found on the last column of page 25 of said edition of "The Chicago Sunday Tribune," said article be-

Plaintiff's Exhibit Copy of Amendment to Answer in Universal Case, stipulated in from Burroughs case.

ing entitled, "The census by machine. An invention for tabulating purposes by a Chicago man. It has already been ordered by the proper authorities in Washington—The same inventor has another called the 'Comptometer' which will do all the arithmetical work required by any business—A 'Tribune' reporter tries to 'fool it,' but does not succeed," said article and its accompanying illustration occupying the whole of said last column on page 25 of said "The Chicago Sunday Tribune."

"Further answering, defendants aver that the alleged improvement or improvements, the subject-matter of said letters patent, particularly the improvement or improvements, the subject-matter of claims 1, 2 and 4 of said letters patent, were on sale in the United States for more than two years prior to the filing date of the application for said letters patent No. 628,176, in suit, to-wit: for more than two years prior to May 31, 1898, and that said offer for sale of a machine or machines embodying the improvement or improvements, the subject-matter of claims 1, 2 and 4 of said letters patent was made by the said Dorr E. Felt, the patentee of said patent No. 628,176 under the following circumstances:

"In January, 1890, the said Dorr E. Felt made a machine embodying the alleged improvement or improvements, the subject-matter of claims 1, 2 and 4 of said letters patent, and installed said machine in the Census Bureau at Washington, D. C., in the month of February, 1890, where said machine was operated and the invention, the subject-matter of claims 1, 2 and 4 of said letters patent, was practiced, and the said Dorr E. Felt, the patentee of said letters patent No. 628,176, then and there offered to sell to the Superintendent of Census, for use in the Census Bureau, machines embodying the subject-matter of claims 1, 2 and 4 of said letters patent.

"Further answering, defendants aver that the alleged improvement or improvements, the subject-matter of said

Plaintiff's Exhibit Copy of Amendment to Answer in Universal Case, stipulated in from Burroughs case.

letters patent, particularly the alleged improvement or improvements, the subject-matter of claims 1, 2 and 4 of said letters patent, were publicly used by the said Dorr E. Felt for more than two years prior to the filing of his application for said letters patent No. 628,176, to-wit: for more than two years prior to May 31, 1898, the said public use occurring at Washington, D. C., in the Census Bureau, where, under the direction and authority of the said Dorr E. Felt, the patentee of said letters patent No. 628,176, a machine embodying the alleged improvement or improvements, the subject-matter of claims 1, 2 and 4 of said letters patent, was publicly tested and used by an employe of the said census bureau.

"Further answering, defendants aver that the alleged improvement or improvements, the subject-matter of said letters patent, particularly the alleged improvement or improvements, the subject-matter of claims 1, 2 and 4 of said letters patent, were abandoned by the said Dorr E. Felt, and that the particular facts and circumstances which constitute such abandonment are as follows:

"The said Dorr E. Felt, patentee of said letters patent No. 628,176, made a machine embodying the alleged improvement or improvements set forth in claims 1, 2 and 4 of said patent, which machine was completed and capable of useful operation during the month of January, 1890; that in the month of February, 1890, the said Dorr E. Felt installed the said machine in the offices of the Census Bureau at Washington, D. C., where it was operated by an employe of the said Census Bureau the said machine being publicly used by the said employe of the Census Bureau in February, 1890; that the alleged improvement or improvements, the subject-matter of claims 1, 2 and 4 of said letters patent, were on sale in the United States in the month of February, 1890, the said Dorr E. Felt offering to furnish the Superintendent of Census, for use in the Census Bureau at Washington,

Plaintiff's Exhibit Copy of Amendment to Answer in Universal Case, stipulated in from Burroughs case.

D. C., a number of machines like the one publicly used at the Census Office in February, 1890, and which embodied the alleged improvement or improvements set forth in claims 1, 2 and 4 of said letters patent; that the said Dorr E. Felt caused to be published or permitted to be published with his full knowledge and consent, in the edition of 'The Chicago Sunday Tribune' of January 12, 1890, a full description of the alleged improvements set forth in claims 1, 2 and 4 of said letters patent, said article appearing in said 'The Chicago Sunday Tribune,' being accompanied by a cut or drawing of a machine embodying said improvements; that subsequent to February, 1890, the said Dorr E. Felt, after having completed the said improvements forming the subject-matter of claims 1, 2 and 4 of said letters patent, after having made a practical and operative machine containing said improvements, after having publicly used the said improvements and consenting to the public use of the said improvements, after having printed or caused to be printed with his knowledge and consent a description thereof, after having offered said improvements for sale in or prior to the month of February, 1890, did nothing further with the said improvements and did not file an application for letters patent thereof except as hereinafter stated, but on the contrary laid aside said machine and the said improvements and took up other inventions and improvements for which he made application for letters patent, and permitted eight years to elapse before filing an application for letters patent for the alleged improvements set forth in claims 1, 2 and 4 of said patent No. 628,176; that during said eight years, to-wit: on June 14, 1895, the said Dorr E. Felt filed an application for patent for improvement in Printing and Calculating Machines which eventuated in patent No. 568,021, dated September 22, 1896, and which is referred to in lines 56 and 57, page 1, of said letters patent No. 628,176, in suit, but which pat-

Plaintiff's Exhibit Copy of Amendment to Answer in Universal Case, stipulated in from Burroughs case.

ent No. 568,021 does not disclose the alleged improvements, the subject-matter of claims 1, 2 and 4 of patent no 628,176 in suit. During the period of eight years following the completion of the alleged improvements set forth in claims 1, 2 and 4 of the patent in suit, and before said Dorr E. Felt filed his application for said patent No. 628,176 (the filing date of the application for said patent being May 21, 1898), other patents had been granted in the United States disclosing the alleged improvements set forth in claims 1, 2 and 4 of the Felt patent in suit, to-wit: the patent to Hiett, No. 508,863, dated April 20, 1897, and the patent to Pike, No. 595,864, dated December 21, 1897.

"December 10, 1904.

UNIVERSAL ACCOUNTANT MACHINE CO.,
By E. F. WICKHAM, *Prest.*
REUBEN E. SPANGLER,
Defendants.

DAVID S. GEER,
Solicitor for Defendants.

PAUL BLAKEWELL,
F. R. CORNWALL,
Of Counsel for Defendants.

Plaintiff's Exhibit Copy of Amendment to Answer in Universal Case, stipulated in from Burroughs case.

"CIRCUIT COURT OF THE UNITED STATES.

NORTHERN DIVISION OF THE NORTHERN DISTRICT OF ILLINOIS.

Comptograph Company, *Complainant,*
vs.
Universal Accountant Machine Company and Reuben E. Spangler, *Defendants.*
} In Equity. No. 27090.

AFFIDAVIT.

STATE OF MISSOURI, CITY OF ST. LOUIS, } ss.

"Edmund F. Wickham, being duly sworn, on his oath says that he is the president of the Universal Accountant Machine Company, the defendant corporation in this cause; that he knows the contents thereof, and that the same is true to his own knowledge, except as those matters therein stated on information and belief, and as to those matters he believes it to be true.

EDMUND F. WICKHAM.

Sworn to and subscribed before me this 10th day of December, 1904. My term expires 17th February, 1905.

GEORGE BAKEWELL,
[Notarial Seal.] *Notary Public.*"

Adjournment taken until Tuesday morning, December 10, 1907, at 10 o'clock.

Met Tuesday morning at 10 o'clock pursuant to adjournment. Present, as before.

(Fourth) Deposition of Plaintiff's Witness, Harry B. Wyeth, stipulated in from Burroughs case.

And thereupon HARRY B. WYETH, a witness on behalf of the Comptograph Company, was recalled and testified as follows:

Q. 1. You are the Harry B. Wyeth who has already testified in this cause, are you not?

A. I am.

Q. 2. Referring to the suit against the Universal Company, in which Mr. Rector filed a brief on behalf of the Burroughs Company, are you able to state whether or not, before the hearing of that case by his Honor, Judge Kohlsaat, Mr. Rector had a copy of the complainant's—the Comptograph Company's—evidence in that cause?

A. He had such a copy. I sent it to him personally and he acknowledged receipt of same.

Q. 3. Have you any means of saying when you sent that copy definitely?

A. I have the carbon copy of the letter I wrote when I sent the record, and also a copy of his reply.

Q. 4. Please state when you sent a copy of the testimony to Mr. Rector?

A. On January 6, 1905.

Q. 5. What is the date of Mr. Rector's reply acknowledging receipt of the evidence?

A. January 11, 1905.

Q. 6. What form did you send the evidence in to Mr. Rector?

A. It was the printed and bound copy of complainant's record, similar to those we filed in the lower court.

Q. 7. Please produce the letter or copy of the same which you send to Mr. Rector and his reply?

A. I herewith produce the same.

(Fourth) Deposition of Plaintiff's Witness, Harry B. Wyeth, stipulated in from Burroughs case.

By Mr. MUNDAY: The letters referred to are offered in evidence on behalf of the Comptograph Company and are in the following words and form:

"Jan. 6, 1905.

Mr. Edward Rector,
1625 *Monadnock Block,*
Chicago.

DEAR SIR:—

I am sending you by bearer printed copy of complainant's record in our suit against the Universal people. The printer has only just delivered these to us and hence the delay in keeping my promise of sometime since.

If you feel disposed to talk about this case in any way after you have read the record I should be more than pleased to see you for this purpose and should appreciate very highly some expression from you in the matter.

Awaiting your summons, I am,

Yours very truly,
(Signed) H. B. WYETH."

"CHICAGO, Jan. 11, 1905.

Mr. H. B. Wyeth,
C/o Comptograph Co.,
146 *Blackhawk St., Chicago.*

DEAR SIR:—

I trust you will pardon my seeming negligence in acknowledging receipt of your note of the 6th inst., and accompanying copy of complainant's record in the suit against the Universal Company. They were handed me at a time when I was extremely busy, and the following day I went to St. Louis and did not return until this morning. I am obliged to you for the copy of the record and shall look it over with interest.

Yours very truly,
(Signed) EDWARD RECTOR."

Q. 8. Immediately after Judge Kohlsaat had an-

(Fourth) Deposition of Plaintiff's Witness, Harry B. Wyeth, stipulated in from Burroughs case.

nounced his decision of that case in favor of the Comptograph Company, what, if any, communication concerning said decision did you receive from the Burroughs Company, or their attorney, Mr. Rector?

A. Upon the same day the decision was rendered, I received a telephone message asking me to call at Mr. Rector's office. I did so, and Mr. Rector told me he had been in long distance telephone communication with Mr. MacCauley of the Burroughs Company, and they thought we ought to take steps to have this decision announced in all the newspapers. I told him we were not prepared to join in this and he finally said they would take care of it alone.

Q. 9. Did he take care of it, and if so, in what manner?

A. The announcement appeared in a day or two in a large group of papers throughout the United States and Mr. Rector afterwards told me that they had this inserted through some advertising agency.

Q. 10. Have you a sample clipping of that announcement in the papers of that time?

A. I have a reproduction of a clipping which I herewith produce.

Q. 11. Where did you get this, Mr. Wyeth?

A. This is one of the several copies that were sent to me by Mr. McCauley, the general manager of the Burroughs Company.

Q. 12. Are you able to state whether or not this reproduction of the clipping, which is in the following words:

"ADDING MACHINE INFRINGEMENT.

In the United States Circuit Court here yesterday Judge Kohlsaat handed down an opinion sustaining the Felt Adding machine patent and holding it infringed by the Universal adding machine. The Felt patent covers all adding machines which are equipped with a movable paper carriage for listing

(Fourth) Deposition of Plaintiff's Witness, Harry B. Wyeth, stipulated in from Burroughs case.

several columns of figures side by side, and is controlled by the Comptograph and Burroughs adding machine companies. Under this decision all machines of this character made by other companies are infringements of the Felt patent.

The Inter Ocean, Chicago, Jan. 20, 1906."

actually appeared in the newspapers at that time, namely on or about January 20, 1906?

A. I am. I personally saw the clipping in a number of different newspapers about that time.

Q. 13. What, if anything, was done by the Burroughs Company with these circulars upon which this reproduction appears?

A. They were mailed to a large number of parties in all parts of the country.

By Mr. MUNDAY: The circular produced by the witness is here offered in evidence and it is in the following words and form:

By Mr. RECTOR: The introduction in evidence of the circular and the copy of the same into the record, as well as the previous introduction in evidence and copying into the record of the newspaper clipping and the testimony of the witness concerning same are all objected to as irrelevant and immaterial to any issue in this case.

The clipping quoted above in Q. 12 appears at the top of said circular, and is followed by this:

"WHAT THIS MEANS.

Under Judge Kohlsaat's decision the Felt patent covers the Pike Adding Machine, the Wales Adder, the Mallman Addograph and *all other adding machines* employing similar wide frame paper carriages, just as completely as it does the Universal machine, and suits will no doubt be filed against these other infringers in the near future.

So far as concerns present users of Universal machines and infringing machines of *other makes,* Judge Kohlsaat's decision means that every one of them may be required either to discontinue the use of such machines entirely, or to have the transversely movable carriage removed and a fixed paper car-

(Fourth) Deposition of Plaintiff's Witness, Harry B. Wyeth, stipulated in from Burroughs case.

riage substituted for it, besides accounting to the owners of the Felt patent for damages for past use of the infringing machines.

And so far as concerns prospective purchasers of Universal and *other infringing machines,* Judge Kohlsaat's decision means that each of them is now advised by the decision of the United States Court that such machines are infringements of the Felt patent, and that any one who now *buys such a machine* with such knowledge does so with his eyes open and must take all of the risks incident to such purchase, such risk being the liability to be enjoined from using the machine if they buy it, as well as being called upon to account for damages to the owners of the patent."

Q. 14. Mr. Wyeth, you came to me immediately after you had visited Mr. Rector and told me about the proposition to publish the result of the suit in the newspapers and to advertise it widely, did you not?

A. I did.

Q. 15. What advice did I give you about that?

By Mr. RECTOR: Objected to as irrelevant and immaterial.

A. You told me to keep out of it by all means and that the best policy for us to pursue was to keep quiet until the matter was determined in a final manner, and that the less we said in the meantime, or did, in an effort to publish the decision or injure the defendant in the suit, the better it would be.

Q. 16. Did you follow that advice?

By Mr. RECTOR: Same objection.

A. I endeavored to do so, but I cannot say that I did entirely.

Q. 17. Were you requested by the other party to the license agreement here in controversy to send letters to the users of the Universal machine?

By Mr. RECTOR: Same objection.

A. We were. The Burroughs Company first sent us

(Fourth) Deposition of Plaintiff's Witness, Harry B. Wyeth, stipulated in from Burroughs case.

a pamphlet reprinting Judge Kohlsaat's decision in the case. They later asked us if we would send a letter to Universal users. We then had reprinted ourselves Judge Kohlsaat's decision and sent the Burroughs Company a copy of same, asking if it would meet their views. They later drew up a letter and sent us a copy of same, which they suggested our sending out to Universal users, and they also sent us a supply of envelopes addressed to Universal users to be used in sending out this letter. We reproduced the letter, of which they had furnished us a copy, as I remember *verbatim* except for a change in one word, and sent out the letter in the envelopes they had supplied us.

Q. 18. Have you the original letter which was sent to you by the Burroughs Company with the request that you should print the same and send it out to the Universal users over the name of the Comptograph Company?

A. I have and herewith produce same.

By Mr. MUNDAY: The paper produced by the witness is here offered in evidence on behalf of the Comptograph Company.

By Mr. RECTOR: The introduction in evidence of the paper produced is objected to as irrelevant and immaterial.

The paper is in the following words and form:

"DEAR SIR:

We beg to call your attention to the decision just rendered by the United States Court at Chicago, declaring the Universal Adding Machine to be an infringement.

Our suit was brought January 23, 1904, and has been hotly contested, but Judge Kohlsaat has so broadly sustained our patent that it is entitled to your careful consideration.

The Felt patent, upon which we sued the Universal Company, has been construed to cover broadly all adding machines having a paper carriage capable of being adjusted to different positions so as to print

(Fourth) Deposition of Plaintiff's Witness, Harry B. Wyeth, stipulated in from Burroughs case.

parallel columns of figures on a sheet of paper, and all adding machines employing that mechanism infringe our patent, except the machines manufactured by the BURROUGHS Adding Machine Company, which operates under an exclusive license.

We have had to fight to maintain our patent and we shall naturally wish it respected, and to get the benefits to which we are entitled. If you wish to see a copy of the decision rendered by Judge Kohlsaat we shall be glad to send it to you, and we believe that as a user of the Universal machine you should give this matter careful consideration.

While under the decision we can bring suit against the users of the Universal machines, we do not intend to bring suits against anybody unless that should prove to be necessary. We do, however, expect our rights to be respected.

Yours very truly.''

By Mr. RECTOR: The copying into the record of the paper in question is objected to for the same reasons as that noted to the introduction of the paper in evidence.

Q. 19. What was the single word in the above paper that you changed when you sent it out to Universal users?

A. In the original as sent us by the Burroughs Company, the word ''BURROUGHS'' is placed all in capitals, but in sending out the circular we put the word in ordinary type, thus: ''Burroughs.'' I do not recall that we made any other change at all in the document except this.

Q. 20. Have you some other samples of printed matter sent out by the Burroughs Company?

A. I have a postal card upon which is printed the following:

By Mr. RECTOR: The proposed reading into the record of the matter appearing upon the card produced by the witness is objected to as irrelevant and immaterial.

(Fourth) Deposition of Plaintiff's Witness. Harry B. Wyeth, stipulated in from Burroughs case.

Witness resumes:

"LEGAL VICTORY FOR BURROUGHS.

The Burroughs Adding Machine Company of Detroit is indirectly interested in the decision recently rendered in favor of the Comptograph Company by Judge Kohlsaat in the United States Court at Chicago. The Comptograph Company brought suit against the Universal Company for infringement of a patent issued to D. E. Felt and owned by the Comptograph Company. The patent covered the wide paper carriage, which is capable of printing several parallel columns of figures on the same sheet. The court sustained the Felt patent and held that the Universal Machine was a direct infringement. The decision was so sweeping that it is believed it can be held to cover all adding machines which are equipped with the movable paper carriage for listing parallel columns of figures.

The Burroughs Adding Machine Company is directly benefited by the decision, as it is the sole licensee of the patent."

Direct examination closed.

Cross-examination waived.

At the request of counsel for the Burroughs Company, the further taking of testimony is here suspended until further notice.

IN THE
CIRCUIT COURT OF THE UNITED STATES,
NORTHERN DISTRICT OF ILLINOIS,
EASTERN DIVISION.

Comptograph Company, *Complainant,* *vs.* Burroughs Adding Machine Company, *Defendant.*	*In Equity.* No. 28,782.

Testimony on behalf of the complainant, resumed by consent, before H. M. Munday, notary public, at No. 907 Marquette Building, Chicago, Illinois, beginning at ten o'clock in the forenoon on Tuesday, March 3, 1908.

Present on behalf of the complainant, John W. Munday, Esq., and on behalf of the defendant, Edward Rector, Esq.

(Second) Deposition of Plaintiff's Witness Dorr E. Felt, stipulated in from Burroughs case.

And thereupon DORR E. FELT, a witness on behalf of the complainant, was produced and being first duly sworn, testified as follows:

Direct Examination by Mr. Munday.

Q. 1. What is your name, age, residence and occupation?

A. Dorr E. Felt; age, 45 years; residence, 3259 Beacon street, Chicago; occupation, manufacturer of adding machines. I am president of the Felt & Tarrant Manufacturing Company.

Q. 2. How long have you been president of the Felt & Tarrant Manufacturing Company?

A. Since its organization.

Q. 3. When was that corporation organized?

A. The Felt & Tarrant Manufacturing Company was

(Second) Deposition of Plaintiff's Witness Dorr E. Felt, stipulated in from Burroughs case.

incorporated January 25, 1889, under the laws of the State of Illinois.

Q. 4. What business was the company organized to engage in?

A. The manufacture and sale of adding machines invented by myself.

Q. 5. In 1889 what was the extent of your interest in the ownership of this corporation?

A. I owned nine-sixteenths of all the stock in the Felt & Tarrant Manufacturing Company.

Q. 6. Who owned the remaining seven-sixteenths of the stock?

A. Mr. Robert Tarrant owned six-sixteenths of all the stock and Mr. C. J. DeBerard owned one-sixteenth. Mr. DeBerard was Mr. Tarrant's cashier, Mr. Tarrant being engaged in running a general machine shop.

Q. 7. How long did you continue to own such a majority of the stock in the corporation?

A. Until January 20, 1898.

Q. 8. Who furnished all the money to run the business of the Felt & Tarrant Manufacturing Company?

A. Mr. Robert Tarrant.

By Mr. Rector: The relevancy of this line of examination is not perceived, unless it may possibly be introductory to some further testimony of the witness which may be relevant, but which I do not foresee. I therefore wish to enter an objection at this point to the examination of the witness thus far had on the ground that it is irrelevant and immaterial to the issue in this case, that issue, as made by the pleadings, being solely the question as to whether or not the defendant has a license under the patent in suit.

Q. 9. What else did he furnish beside money, if anything?

A. He let the Felt & Tarrant Manufacturing Company have the use of his machine tools when he did not have to use them in his own business, for a nominal con-

(Second) Deposition of Plaintiff's Witness Dorr E. Felt, stipulated in from Burroughs case.

sideration; he paid all the bills of the Felt & Tarrant Manufacturing Company with his personal check and the help employed on the Felt & Tarrant Company's work were the employes of Robert Tarrant so that Felt & Tarrant Company did not have to have any bank account. Mr. Tarrant also furnished large credit to the Felt & Tarrant Manufacturing Company and backed its credit on the purchase of advertising, material, etc. The Felt & Tarrant Company in its manufacture of adding machines had access to and the benefit of Mr. Tarrant's tool room and general supplies.

Q. 10. Did the Felt & Tarrant Manufacturing Company owe any money in 1889 and subsequently? If so, please state to whom it owed the money, how much and to whom? I do not mean current bills payable, but any continuing debt.

A. Prior to the incorporation of the Felt & Tarrant Manufacturing Company there was a firm of Felt & Tarrant, a partnership in which Mr. Tarrant owned six-sixteenths interest, Mr. DeBerard one-sixteenth and I myself owned nine-sixteenths interest. The company was organized with the expectation and for the object of selling some stock so as to procure additional capital to push the business with. The old partnership owed Mr. Tarrant about twelve or fourteen thousand dollars. So to start the company off without debt to make a good showing for prospective investors, each individual in the partnership assumed his *pro rata* of the indebtedness to Mr. Tarrant, Mr. DeBerard and myself giving Mr. Tarrant notes for our proportion of it. But in spite of the greatest possible economy, the company began to run in debt to Mr. Tarrant, so that by February 1, 1893, the Felt & Tarrant Manufacturing Company owed Mr. Tarrant $12,799; February 1, 1894, $17,076; February 1, 1895, $21,238; February 1, 1898, $38,263; February 1, 1897, $35,480; Febuary 1, 1898, $33,610. The indebted-

(Second) Deposition of Plaintiff's Witness Dorr E. Felt, stipulated in from Burroughs case.

ness gradually decreased until early in 1903 the indebtedness to Robert Tarrant was all cleared up.

Q. 11. You say you became indebted to Robert Tarrant personally, by assuming your *pro rata* of the amount that the firm of Felt & Tarrant was indebted to said Tarrant. State the amount of this personal indebtedness, when it began and how long it continued.

A. I have not the data for the exact amount when the company was first organized, but on July 1, 1891, I gave my note to Mr. Tarrant for $6,856.20. This note accumulated with the interest until I owed Mr. Tarrant personally in round figures $9,600, which I settled by a transfer of stock to Mr. Tarrant on January 20, 1898.

Q. 12. After that transfer of stock in January, 1898, how did the relative ownership of the stock of the corporation stand?

A. Mr. DeBerard owned one-sixteenth of all the stock and the balance was almost equally divided between Mr. Tarrant and myself, but I cannot give the exact figures, except that two or three shares of stock in the meantime had been transferred to Charles E. Kremer. This left me about fifteen thirty-seconds of the stock.

Q. 13. Can you state the gradual increase of the business of the corporation during these years?

A. There was a slight increase every year, I think, in the gross sales. I have not the figures with me, but as a matter of fact the gross sales each year just about approximated the indebtedness to Mr. Tarrant. Some years the indebtedness to Mr. Tarrant exceeded the gross total of the sales and some years it was the other way.

Q. 14. Is it not true that in 1898, the business of the corporation had grown so that it exceeded $50,000 per annum?

A. Yes. It was beginning to make money and to reduce the indebtedness of Robert Tarrant at that time.

(Second) Deposition of Plaintiff's Witness Dorr E. Felt, stipulated in from Burroughs case.

Q. 15. During this period of time from 1889 until 1898, what means of support or livelihood did you have?

By Mr. Rector: Defendant's counsel renews his objection to the line of examination being pursued, upon the ground that it is all irrelevant and immaterial to the issue in the case; and it is agreed between counsel that such objection may apply without repetition both to the preceding portion of this examination which has occurred since the previous entry of objection and to any further examination along these general lines.

A. The Felt & Tarrant Manufacturing Company paid to me a small weekly allowance to live on. This allowance in 1891 was $18 a week; in 1893, $21 a week; in 1895, $25 a week; in 1898, $30 a week.

Q. 16. During this time did you have a family to support?

A. I did after January 15, 1891.

Q. 17. Was this weekly stipend charged against you in the accounts of the Felt & Tarrant Company as a salary or as an advance of money to you for which you were to account in the future?

A. It was charged as a salary.

Q. 18. Did you owe the company for any advances made by it to you from time to time, and if so, for what amounts and for what purpose? I mean now between the years 1891 and 1898.

A. Yes, I owed the company for money advanced to me for living expenses, which amounted to $35 in January, 1892; $124, January, 1893; $207, January, 1894; $288, January, 1895; $372, January, 1896; the same amount in January, 1897, and 1898.

Q. 19. In 1889, what kind or kinds of adding machines was the Felt & Tarrant Company actually engaged in making and selling?

By Mr. Rector: Question is objected to as irrelevant and immaterial and it is agreed that the ob-

(Second) Deposition of Plaintiff's Witness Dorr E. Felt, stipulated in from Burroughs case.

jection may apply without repetition to any further examination of the witness concerning the same subject.

A. The Felt & Tarrant Manufacturing Company were manufacturing an adding machine known as the Comptometer, which is still manufactured, and also an adding machine known as the Comptograph, now manufactured by the Comptograph Company.

By the WITNESS: I desire here to make a correction of my former testimony and which just occurs to me. It was not when the Felt & Tarrant Company was originally incorporated in 1889 that the individual owners of the concern assumed the indebtedness individually, but that was done some time in 1891, at a time when the capital stock of the company was increased from $40,000 to $800,000 and half the stock put in the treasury to be sold.

Q. 20. What, broadly and generically stated, is the difference between these two machines?

A. The Comptograph is a machine designed for adding numbers and simultaneously printing a list of the numbers on paper, together with the answer or footing of any list of numbers printed. The Comptographs being manufactured at that time printed the numbers on a tape of paper feeding off a roll, the printing and adding of the numbers being effected by simply touching the keys corresponding to the numbers to be added and printed. The Comptometer is a machine for adding, multiplying, dividing and so forth, which does not print a list of the numbers involved, but shows the answer to any arithmetical operation on a register or reading line of the machine.

Q. 21. I show you a machine, and ask you to state, if you know, what it is?

A. This is a Comptograph such as manufactured by the firm of Felt & Tarrant and the Felt & Tarrant Manu-

(Second) Deposition of Plaintiff's Witness Dorr E. Felt, stipulated in from Burroughs case.

facturing Company in 1889. This particular machine was manufactured by the Felt & Tarrant Manufacturing Company.

Q. 22. It is what is generally known as the roll paper Comptograph, is it not?

A. Yes.

Q. 23. Where has this roll paper Comptograph been, since it was sold, so far as you know, if it was sold?

A. It was sold to the Merchants & Manufacturers National Bank of Pittsburg, Pa. It was left with them on trial some time prior to September, 1889, and was formally billed to them June 3, 1890, at which time they paid for the machine. It was used by them continuously for a great many years, I think about ten years, it may have been longer than that, until they merged with some other bank and took a new name, I think the Bank of Pittsburg was the name. Then its use was discontinued not because the machine was worn out, but because in taking over the other bank they acquired a number of adding listing machines suitable for wide paper work.

Q. 24. Did the machines like this one give general satisfaction to the users of them?

A. They did.

Q. 25. You speak about a wide paper machine. Do you mean by this a machine which will print the numbers added in a series of columns upon a wide sheet of paper, as contradistinguished from the kind of machine which is called the roll paper Comptograph and which prints the numbers added upon a narrow ribbon of paper in a single continuous column?

A. Yes, by wide paper machine I mean one which prints a multiplicity of columns of items or numbers on the same sheet of paper.

By Mr. MUNDAY: The roll paper Comptograph referred to by the witness, and which is already an exhibit in another suit in this court, is here offered

(Second) Deposition of Plaintiff's Witness Dorr E. Felt, stipulated in from Burroughs case.

in evidence on behalf of the complainant herein, the same to be marked "Complainant's Exhibit, Roll Paper Comptograph."

Q. 26. Did you at any time invent and construct one of these wide paper machines of the kind to which you refer?

A. Yes, I invented and constructed such a machine in 1889 and the early part of 1890. That is, a machine for printing vertical parallel columns side by side on a short and wide sheet of paper instead of on a tape of paper feeding off a roll.

Q. 27. I refer you to your Letters Patent No. 628,176, dated July 4, 1899, the application for which letters patent was filed May 31, 1898, and I especially refer you to those claims of the said patent under which the defendant herein was licensed, or some of them, for example, to claims 1, 2 and 4, and will ask whether or not the wide paper machine to which you refer as having been invented and constructed by you in 1889 and the early part of 1890, contains the subject-matter of these claims.

By Mr. Rector: Question is objected to as irrelevant and immaterial to the issue in this case. It is further objected to as calling for secondary evidence; also as calling for an expression of opinion or conclusion on the part of the witness in respect to matter he has not so far been shown qualified to testify on.

A. That machine does contain the subject-matter of claims 1, 2 and 4 of patent dated July 4, 1899, No. 628,-176.

Q. 28. In point of fact, the wide paper machine to which you have referred as having been invented by you and constructed in the latter part of 1889 and the early part of 1890, is the machine which in the suit of the Comptograph Company against the Universal Adding Machine Company, impleaded as the Universal Accountant Machine Company, was offered in evidence as

(Second) Deposition of Plaintiff's Witness Dorr E. Felt, stipulated in from Burroughs case.

"Complainant's (Comptograph Company's) Exhibit Felt's 1890 Model." Is that true?

A. Yes, that is true.

Q. 29. It is the machine which, on page 14 of Complainant's Exhibit, Rector's Brief, is referred to as "merely an experimental machine," and which on page 17 of that brief, the writer says you "had completely abandoned the old 1890 model and everything contained in it, and had no thought of making any use of them or of applying for a patent upon them," and of which it is stated on page 49 "was admittedly never designed for practical and commercial use, but was gotten up simply and solely as an experiment to demonstrate to the census officials and others what could be done with such a machine?

By Mr. Rector: The question is objected to as irrelevant and immaterial, and for the further reason that it does not appear that the witness has any familiarity with the brief mentioned or is qualified to answer the question.

A. It is the same machine. I have read the brief, and heard the argument in the case, and this is the only machine in the case to which the statements quoted could have been intended to refer.

Q. 30. I now call your attention to a machine here present and will ask you to state what it is?

A. This is the machine which I referred to in my previous answer as the machine for wide and short paper which I invented and constructed in 1889 and 1890. It is the machine that was in evidence in the suit against the Universal Adding Machine Company, impleaded as the Universal Accountant Machine Company, which was put in evidence by the Comptograph Company as "Complainant's Exhibit, Felt's 1890 Model."

Q. 31. Is that the machine which the testimony in that case shows that you took to the Census Office at Wash-

(Second) Deposition of Plaintiff's Witness Dorr E. Felt, stipulated in from Burroughs case.

ington in the early part of 1890 in an effort to get the Superintendent of Census interested, with a view to getting the machine into public use in the Census Office?

By Mr. RECTOR: Question is objected to as irrelevant and immaterial, and further as an apparent effort to introduce proof by reference to testimony in another case instead of calling upon the witness under examination to testify to facts in this case.

A. It is the same machine.

Q. 32. Did you, or did you not, in fact, take this machine down to the Census Office at some time, and if so, when?

By Mr. RECTOR: The question is objected to as irrelevant and immaterial, and it is agreed that this objection may apply without repetition to any further examination of the witness concerning the model or machine in question.

A. Yes, shortly after February 6, 1890.

By Mr. RECTOR: I should like it to appear upon the record that before the witness answered the question upon the record, he stated to his counsel off the record that he could not give the date inquired about from memory; thereupon counsel examined a printed copy of the record in the suit against the Universal Company which has been referred to and gave the witness some dates from that record; and that thereafter, some book referred to as Robert Tarrant's time book was produced and examined by counsel and the witness with respect to the date inquired about, before the witness answered the question upon the record.

By Mr. MUNDAY: To which counsel for the Comptograph Company does not assent entirely.

Q. 33. What did you do with the machine down at the Census Office?

A. I showed it to the Superintendent of Census with a view to procuring an order for some more machines like it. I left it at the Census Office two or three days, possibly for a week.

Q. 34. Did you succeed in interesting the Census Of-

(Second) Deposition of Plaintiff's Witness Dorr E. Felt, stipulated in from Burroughs case.

fice sufficiently to get any orders for machines or any prospective orders?

A. I did not.

Q. 35. Did you know when you left the Census Office whether you would get the orders from the Census Office or not, or offers for the machine?

A. I did not.

Q. 36. How long did you continue to hope for orders for the machine from the Census Office, or hope to interest the Census Superintendent?

A. I had some hopes of receiving an order for some machines like this from the Census Office for several weeks or perhaps months after returning from Washington, but not many months.

Q. 37. What did you do with the machine after the few days it was left in the Census Office? I mean what did you immediately do with it?

A. I took it to the hotel and learning that Carroll D. Wright was considered a pretty good authority by the officials of the census department I took it to his office one day to show it to him, and then I brought the machine back to Chicago.

Q. 38. It was charged in the brief *amicus curiae* of Mr. Rector that this machine was an abandoned experiment. As bearing upon that matter, I should like to ask you some questions about it. Was this machine a practical operative machine in any particular?

A. It was an entirely practical, operative and useful machine in every particular. The adding mechanism was and is identically like a number of other machines which we manufactured and sold and which went into use and were used for years, the exhibit in this case, Roll Paper Comptograph being one of them. The printing mechanism was the same as that in the Roll Paper Comptograph, except in respect to such changes as were necessary to be made to adapt it to wide paper work, and all those

(Second) Deposition of Plaintiff's Witness Dorr E. Felt, stipulated in from Burroughs case.

features pertaining to the wide paper worked perfectly in practice and still do so. The machine is now very old and hasn't been oiled for years and has collected a good deal of dust and doubtless received some pretty rough handling, but nevertheless it will even now do the work intended in an accurate manner. Of course, it does not contain all the conveniences and improvements which my latest machines have, but it could now be used to advantage so that the user would experience economy of time as compared to doing the work for which it was intended by means of the pen and mind, and if it had a new ink ribbon, it would turn out work which for legibility and neatness is far superior to hand work.

Q. 39. Did you ever offer this particular machine for sale to anybody?

A. No, I had to keep it as a criterion and guide, or as a working model or pattern when I should come to make more of them.

Q. 40. When you brought the machine back from the Census Office you had some knowledge of the salability of listing adding machines, did you not?

A. Not very much. In those days it was very difficult to sell any kind of an adding machine.

Q. 41. State your views as to whether or not, if you had chosen to do so, you could have sold this machine to some of your customers?

A. I could have sold it without any difficulty whatever. In fact, if a price had been set on it not too much higher than the other machine which we were making, it would have been easier to sell it than any machine we had.

By Mr. MUNDAY: The machine referred to by the witness is here offered in evidence on the part of the Comptograph Company, the same to be marked Complainant's Exhibit, Felt's 1890 Model.

By Mr. RECTOR: Introduction in evidence of the model is objected to upon the ground that it is irrelevant and immaterial to the issue in this case.

(Second) Deposition of Plaintiff's Witness Dorr E. Felt, stipulated in from Burroughs case.

Q. 42. How much money would it have required to put this machine on the market in such manner that it could be made and sold at a profit?

A. Looking back over twenty years' experience in making and selling adding machines and in the light of that experience, I would say that it would cost anywhere from a quarter to a half million dollars to get it on the market to the point where it would return a reasonable profit. In those days, that is, the early part of the nineties, I thought that $75,000 to $100,000 would be sufficient, but now I know better. I would have been willing to tackle it, if I could have gotten the money, with a great deal less at that time, but I couldn't get any to put into this type of machine.

Q. 43. Mr. Rector, who wrote the brief that seems to have caused the trouble out of which this litigation arose, is a director of the Burroughs Adding Machine Company. Does he have means of knowing what it costs to put one of these machines on the market?

A. Undoubtedly he has.

Q. 44. Please state why it is that to put one of these machines on the market is so expensive that in your judgment it would require from a quarter to a half million dollars expenditure of money before a profit could be reached?

A. This type of machine not only contains a great many parts, but as compared to a roll paper adding listing machine, it contains a great many different kinds of parts. The mechanism in adding machines is necessarily very intricate, and must be manufactured with a high degree of precision. To manufacture such mechanism economically, not only is a large and expensive equipment of machine tools, such as you can buy, necessary, but a large and expensive equipment of special tools also have to be made and to manufacture them economically, that is, at a cost such as will enable one to sell them at a profit, the

(Second) Deposition of Plaintiff's Witness Dorr E. Felt, stipulated in from Burroughs case.

parts for these machines must be manufactured a large number at a time, which ties up a whole lot of money. This is particularly true where there are a larger number of different kinds of parts of which only one or two of many kinds are used in a machine. This also makes the cost of special tools very heavy. Then in marketing the machine on a scale sufficiently large to insure profit, a great deal of money is expended in training men and selecting good ones, and the salesmen must have a large stock of machines to put on trial, which also ties up a lot of money.

Adjournment taken until to-morrow morning at 10 o'clock, March 4, 1908.

Met at 10 o'clock in the morning, March 4, 1908, pursuant to adjournment.

Present as before.

Q. 45. Going back to the Census Office, I wish you would state how the Superintendent of the Census, or those to whom he had delegated the examination of your machine in his behalf, seemed to regard the machine, so far as you could judge from what was said to you.

A. Personally, the Superintendent of Census did not express himself very positively one way or the other. But some of the heads of departments in the Census Office were quite free in expressing their belief in the value and utility of the machine. No one criticised it adversely. In fact, I myself as the result of demonstrations made in the Census Office, and by seeing some of the clerks operate it there, seemed to be the ony one that could see any chance of improvement. I did see ways in which some added functions would be desirable in the machine.

Q. 46. If the Census Office was satisfied with the machine, as the officials seemed to be, how do you account for the fact that they did not enter into some negotiation with you looking to procuring the machines for their use?

(Second) Deposition of Plaintiff's Witness Dorr E. Felt, stipulated in from Burroughs case.

A. As far as I could learn, either an appropriation from Congress or the approval of the members of the committee on census in the Senate would have to be obtained before the officers of the census department would order the machines, and a thing of that kind was too great for me to undertake to obtain.

Q. 47. When you brought the machine back from Washington, what was Mr. Tarrant's attitude toward the machine?

A. He said I mustn't do anything more with it and that what time and money we had must be devoted entirely to the machines we then had on the market, namely, the Comptometer and the Comptograph. He seemed to regard me as merely an inventor who had no business judgment, and whenever I wanted to talk about the wide paper machine to him he treated the subject with contempt and wouldn't talk about it.

Q. 48. Was there anybody else beside Mr. Tarrant who was putting money into the business, or who did subsequently put money into the business, to whom you could talk concerning the machine?

A. No. But I did try to get additional money in the business from outsiders for many years without success, although I tried very hard.

Q. 49. Of whom did you try to get money to put into the business for the purpose of putting this machine on the market?

A. I tried everybody that I could get in touch with that I thought had money or might have money, and therefore might possibly be interested. I sent out prospectuses pertaining to the business with this idea in view to all those who had bought Comptometers and Comptographs, and personally solicited many men. One whom I remember in particular was Mr. Charles Dickinson of the seed company, and he did give me some considerable encouragement, but finally after discussing the

(Second) Deposition of Plaintiff's Witness Dorr E. Felt, stipulated in from Burroughs case.

matter for three or four years did not put any money into it.

Q. 50. About when was it that you had these discussions with Mr. Charles Dickinson, with a view to getting him to put some money into the business?

A. During the years 1891, 1892, 1893 and 1894.

Q. 51. You speak of having sent out a prospectus. Was that a printed document?

A. Yes, I have a copy here.

Q. 52. This pamphlet which you produce appears to have been printed by George E. Cole & Co. of Chicago, but it bears no date of publication printed on it at the title page. What was the date of the publication of this pamphlet and does the pamphlet contain any internal evidence of such a date?

A. The pamphlet contains a photoengraved reproduction of a testimonial written on a postal card by Mr. C. I. Wade, cashier of the Pittsburg National Bank of Commerce, dated April 24, 1891, so that it must have been printed after that date, and I judge from the testimonials on pages 26 and 27, that it must have been printed very soon after that date. The testimonial on page 26, which is a printed copy of one by Mr. W. A. Shaw, cashier of the Merchants & Manufacturers Bank, also of Pittsburg, refers to this machine in evidence. "Complainant's Exhibit, Roll Paper Comptograph." As near as I can recollect, the pamphlet was printed in the summer or fall of 1891. I know it was printed about the time that the capital stock was increased from $40,000 to $800,000, which was in the summer of 1891.

Q. 53. Does this prospectus mention the machine that you took to the Census Office, "Complainant's Exhibit, Felt's 1890 Model?"

A. It does, on page 27. It says:

> "We make a Comptograph which takes in a sheet of paper fifteen inches wide, and has a spacing lever

(Second) Deposition of Plaintiff's Witness Dorr E. Felt, stipulated in from Burroughs case.

for feeding both sideways and up and down. This form will be used largely for statistical work, census tabulation, and for computing election returns, and on certain kinds of office work. We have a working model of it, and expect soon to make the necessary special tools for manufacturing them in quantities. The following is a reduced fac-simile of one made on the model we now have."

Beneath this paragraph on the same page is a photo-engraved reproduction of a tabular sheet of numbers made on this identical machine which I had down to the Census Office, "Comptograph Company's Exhibit, Felt's 1890 Model."

Q. 54. What did you do with this prospectus?

A. I mailed many of them and I handed numbers of them to people whom I thought might be induced to invest in the business.

Q. 55. How many of them did you mail and hand out, as near as you can tell?

A. Nearly all that were printed, which was several hundred.

Q. 56. When did you send and give these prospectuses out to people whom you thought likely to put money into the business?

A. I sent most of them out in 1891 and 1892. And I handed out some in 1893 and 1894.

Q. 57. Did you ever try to keep this invention a secret in any manner?

A. No. I showed the machine to numbers of people all through the years from 1890 up to the time the patent was applied for, and I permitted newspaper reporters and artists to see it, who inserted in the Chicago Tribune a long article in regard to my machine, in connection with which was printed a cut showing the general appearance of the machine.

Q. 58. When was that article published in the Chicago Tribune?

(Second) Deposition of Plaintiff's Witness Dorr E. Felt, stipulated in from Burroughs case.

A. Sunday, January 12, 1890.

Q. 59. What was your purpose in permitting this publication of the general appearance of the machine and this description of its purposes or functions that appears on the Chicago Sunday Tribune of January 12, 1890?

A. Why, some way, I do not know how, the Tribune heard of it and sent the man over there to Tarrant's office, and I was glad enough to show him the machine because I knew an article at that time would attract attention to it.

Q. 60. The fact is, Mr. Felt, is it not, that you wanted the public to know that you had such a machine, and did not care how many people saw it or knew about it? Is that so?

A. That is the fact.

By Mr. MUNDAY: The prospectus produced by the witness and the copy of the Chicago Sunday Tribune for January 12th, referred to by the witness, is here offered in evidence on behalf of the Comptograph Company, the same to be marked "Complainant's Exhibit, Prospectus," in the one case, and "Complainant's Exhibit, Chicago Tribune," in the other case.

Q. 61. Before you brought your invention to our Mr. Evarts for the purpose of applying for a patent, had you ever previously explained this invention to a patent solicitor or solicitors?

A. I showed the machine and its general operation to Mr. Oscar W. Bond at one time when he called to see Mr. Tarrant on some business matters in connection with Mr. Tarrant personally. That was some time in the year 1894. I also brought the machine down and showed it to Mr. Evarts in the winter of 1894-95, and as I could not afford to spend the money to patent it at that time in view of Mr. Tarrant's attitude towards the machine, and his relation to the affairs of the business which necessitated my strict compliance with all his wishes and preju-

(Second) Deposition of Plaintiff's Witness Dorr E. Felt, stipulated in from Burroughs case.

dices, I asked Mr. Evarts what danger I ran on account of the delay in patenting it. At the time Mr. Munday joined the consultation and stated that an inventor was allowed two years after the invention came into public use in which to apply for a patent.

Q. 62. What did you tell Mr. Oscar W. Bond with respect to patenting the machine, if anything, at the time you showed it to him concerning its general operation?

A. Personally, I do not recollect having talked with him about patenting it, though he says there was some such talk in his testimony in another case in regard to the matter.

Q. 63. Referring now to the machine, "Felt's 1890 Model," state whether or not after you brought it back from the Census Office and before you applied for a patent on it, you added anything to the machine, and if so, what?

A. Yes, I attached directly to this particular machine a device which would automatically ring a bell whenever in the use of the machine the printing approached the bottom of the sheet, so as to prevent the operator from running the sheet clear out of the bite of the paper feed roll. I effected this result by turning a groove in one of the paper feed rolls and extending through a slot in one of the paper guides a little lever with a curved end, which normally when no paper was in the machine would drop, in response to the impulse of a spring, into the groove in the roll, but when the paper was inserted, the paper would push it out of the groove of the roll, thus swinging the lever on its pivot against the power of its impelling spring, and would not drop back into the groove again until the rear or back end of the paper had passed a certain point in its feed around the roll. This action of the lever dropping into the groove would carry a bell into the zone of a vibrating clapper where the bell would be hit by a clapper and rung every time the line spacing

(Second) Deposition of Plaintiff's Witness Dorr E. Felt, stipulated in from Burroughs case.

mechanism of the machine was operated. The bell and the arm extending into the groove both being carried by a common pivotal shaft to which they are both rigidly fastened served to keep the bell in or out of the zone of the vibrating clapper according to whether or not there was paper in the machine and whether or not the printing line on the paper had approached dangerously near to the margin of the lower end of the paper, thus warning the operator that he must turn the paper back to start a new column of numbers on the sheet. Originally this mechanism which I have just described was soldered to the paper carriage of the machine and the solder having deteriorated, it came off, but I have the mechanism here.

Q. 64. Can you fix the time when you attached the sheet end warning device to the machine to which you refer in your last answer?

A. It was while the application for patent on the warning device that would indicate to the operator when the ink ribbon was nearly unwound from either spool, so that the operator could reverse the feed of the ribbon, was being prepared or was pending in the Patent Office. This application resulted in Patent No. 578,919, applied for April 3, 1896, and issued March 16, 1897. Both warning devices are based on the same fundamental idea, namely, allowing the mere absence of the ribbon or paper from a portion of the body of the spool or paper roll allowing a lever to be displaced from a retracted position under the impulse of the spring and cause a bell to be rung. It was applying this warning device to the ribbon which caused me to first see a way to warn the operator when the paper was nearly fed out of the machine, and thus prevent feeding the paper clear out of the bite of the roll and destroy the work already done on the sheet involved in the process. This warning device, as applied to the paper and pivotally attached to this particular machine had one fault, the tongue or lever coacting with the

(Second) Deposition of Plaintiff's Witness Dorr E. Felt, stipulated in from Burroughs case.

paper and the slot in the roll had a tendency to tear the paper. Afterwards I overcame this difficulty by employing a multiplicity of levers and slots.

Q. 65. At the time when you applied this sheet end warning device to the 1890 model machine, had you heard of the Hiett patent adding machine, or did you know of anybody other than yourself being engaged in an attempt to make a wide paper machine?

A. No, I had not heard of Hiett's or any other contemplated wide paper machine.

Q. 66. You then believed yourself to be the sole occupant of this field?

A. I did.

Q. 67. What did it cost to make the application for and obtain the Patent No. 628,176 here in suit?

A. Five hundred and thirty-nine dollars.

Q. 68. During all this time after you began to try to get money into the business in 1891, did you have $539?

A. I did not at any time during that period.

Q. 69. Up to what date do you refer in your answer?

A. Up till long after the patent was applied for.

Q. 70. If you had had sufficient money to apply for a patent, would you have applied for it?

A. As I never did have it I don't know as I ever had occasion to determine what I would do if I did have it. But I believe if I had had the money, I would have put it into the company and insisted that a patent be applied for on this invention.

Q. 71. Mr. Felt, you are charged with having abandoned this invention. Is it true or not that you ever intended to abandon the invention?

A. I never had any thought of abandoning it. As a matter of fact, I always regarded it as the coming type of adding listing machine because a sheet of paper is so much more convenient for filing, reading and handling in general as compared to a long tape of paper. But I al-

(Second) Deposition of Plaintiff's Witness Dorr E. Felt, stipulated in from Burroughs case.

ways believed that to be at its best a wide paper machine would have to have something to prevent the operator from running the sheet of paper clear out by inadvertence, and also something to quickly return the paper to its starting point, that is so as to present the top of the sheet of the printing line of the machine so as to not lose too much time after completing one column on the sheet in getting it in readiness to commence another column, and before I actually put any machine on the market I had both these things, both of which are shown in the patent in suit No. 628,176. One of these two things are not found in any other machine except the Comptograph now on the market, and the other is not found in a manner which is entirely automatic in any other machine on the market to-day except the Comptograph.

Q. 72. Your application for the patent in suit, No. 628,176, was filed May 31, 1898. How long before the application was put in the Patent Office was it that you took the invention to your patent solicitor and instructed him to make the application?

A. I cannot say with reference to this particular patent. Usually they have taken several months to prepare an application, and I do not believe that this is any different in that respect than the others. In fact, at the same time that I submitted this machine, together with some drawings illustrating the sheet-end-warning of paper-feeding alarm and the automatic return of the paper to start a new column, as well as a modification of the machine to adapt it to those features and the character of mechanism we were using in the Comptograph at that time, I also submitted a model and some data from which to prepare a patent covering numerous improvements of function and refinement in the main body or adding and printing features of the Comptograph, and probably the time consumed between the time when I brought these models or machines and other data down to the attorney's

(Second) Deposition of Plaintiff's Witness Dorr E. Felt, stipulated in from Burroughs case.

office was even longer than usual. The subject-matter of these two patent about which I am now talking is represented in the patent in suit and in patent No. 661,121, application for which was filed May 2, 1898, issued November 6, 1900.

Q. 73. How did you come to file the application for the patent in suit at that particular time?

A. The business of Felt & Tarrant Manufacturing Company was beginning to make money and reducing its debt to Robert Tarrant, and consequently Mr. Tarrant was less arbitrary and I was in a position to do more as I pleased without running the danger of having the business ruined or at least greatly injured through lack of funds to carry it out.

Q. 74. Who knows about the hostile attitude of Robbert Tarrant to which you have testified? I mean his hositility toward this invention and his objection to your doing anything with relation to it?

A. Mr. C. J. DeBerard, who was cashier for Mr. Tarrant at all that time; Mr. Charles Michels, who was bookkeeper for Mr. Tarrant from 1890 until now. Most any one around the factory.

Q. 75. Who knows about the financial condition of the company, the indebtedness of the company to Robert Tarrant; your indebtedness to Mr. Tarrant and to the company; and as to your financial condition, and what you received per week, about all of which you have testified?

A. Mr. C. J. DeBerard.

Q. 76. Where does Mr. C. J. DeBerard and Mr. Charles Michels live? Where are they to be found?

A. They both live in Chicago and Mr. Michels is to be found at Mr. Tarrant's office, 52 Illinois street, Chicago, and Mr. DeBerard is to be found at the office of the Felt & Tarrant Manufacturing Company, 874 North Paulina street, Chicago.

Q. 77. When you brought the machine back from the

(Second) Deposition of Plaintiff's Witness Dorr E. Felt, stipulated in from Burroughs case.

Census Office in 1890, between that time and the time when you made the application for the patent in suit, what did you do looking to the further perfecting of this machine?

A. What I did during that time in the way of inventing is represented in a series of patents, numbered as follows:

465,255,
568,020,
568,021,
578,919,
590,972,
661,121,
628,176.

I will point these inventions out, or most of them, in the order of the dates of the filing of applications.

Patent No. 465,255, *applied for November* 11, 1890, *issued December* 15, 1891.

On the 1890 model, after printing a list of items, the operator, to print the answer or total of the items, looked at a reading line or sight register of the machine, which always disclosed the amount added since the machine was last canceled or turned to zero, preparatory to starting the addition of a list of numbers, and observing the total there shown, touched it on the keys, thus printing it on the paper beneath the column of numbers already printed on the paper. To make this operation purely automatic, I devised a mechanism which would at any time automatically print any amount standing on the register of the machine on the paper in response to the mere depression of a plunger added to the machine for the purpose, so that instead of having to touch a number of keys all the operator had to do was to press this plunger for the purpose of printing his answer, thus greatly simplifying the operation and eliminating the possibility of mistakes.

(Second) Deposition of Plaintiff's Witness Dorr E. Felt, stipulated in from Burroughs case.

This device is equally applicable to and desirable in a wide paper machine or a roll paper machine, the same as are all the others which I will mention, except one, which is applicable only to a roll paper machine, and three which are applicable only to wide paper machines.

These things which are applicable to both types of machines were patented in connection with roll paper machines, because we had the roll paper machines on the market and were selling some of them, and Mr. Tarrant did not particularly object to detail improvements in machines which we had on the market which could be worked in from time to time as we made one lot of machines after another.

Another improvement shown in this same patent consisted of supplying the power to do the carrying from the operation of the main operating lever of the machine, instead of from the operation of the keys.

On the 1890 model, and other machines made at that time, the canceling or turning of the machine to zero was perfected by depressing a lever on the right hand side of the machine and then rotating a knob until the figure 7 appeared at the sight opening of the register in each column, and the releasing the lever, and further rotating the knob until the machine automatically stopped so as to display zeros in every column of the register. I devised mechanism operating in response to the pressure of another plunger added to the machine to effect the canceling operating by a single motion of the hand. This is found to be very hard on the machines in service, as the operator would strike the plunger such a blow as to put severe strain on the part, and so it was not used in the manufacture of the machines to any extent.

Another invention disclosed in this same patent consists of a device for use in the performance of the operation of subtraction.

(Second) Deposition of Plaintiff's Witness Dorr E. Felt. stipulated in from Burroughs case.

Patent No. 568,020, *filed September* 10, 1894, *issued September* 22, 1896.

This 1890 model—and in using the term I always mean the wide paper machine which was taken down to the Census Office—provided means for automatically filling in ciphers, but this means as embodied in the 1890 model necessitated touching the keys from the right towards the left, that is, in touching a number like 204 the operator would touch the 4 first and then the 2 and the cipher would automatically be printed in place without his having touched a key for it, so I added to this cipher printing other mechanism which made it possible for the operator to touch the keys either from left toward the right or right toward the left, or in any order in which he might find it convenient to touch them in. Heretofore when an answer was printed by automatic answer printing mechanism, the machine always printed a row of ciphers to the left of the highest digit or order of numbers in the answer. To obviate this I devised mechanism which would eliminate those undesired ciphers in the answer, the same being also shown in this patent.

To obviate the necessity for the operator when turning the machine to zero being careful to turn it just to 7 before releasing the canceling lever, I devised a sort of an interlocking mechanism so that all he had to do was first to press the lever with one finger and then turn the canceling knob until the machine stopped at zero, this also being shown in this patent.

Patent No. 568,021, *filed June* 14, 1895, *and issued September* 22, 1896.

Up to 1894 all Comptographs made by the Felt & Tarrant Manufacturing Company printed in each separate column immediately at the conclusion of the depression

(Second) Deposition of Plaintiff's Witness Dorr E. Felt, stipulated in from Burroughs case.

of a key in the column, so in that year I reorganized the entire machine so that the operator would first touch all the keys without producing any actuation of either the printing or adding mechanism, and then if he made a mistake in touching the keys he could release them and reset them before operating the main operating lever of the machine, which then served to actuate all the parts to add and print the number represented by the keys set on the keyboard. This improvement was of no particular value to the experienced operator, but is of material assistance in helping a beginner to use and learn to operate the machine. This improvement involved material changes in the mechanism of every section of the machine—the key operation, the prime column actuator mechanism, the secondary or carrying actuating mechanism for carrying the tens, the automatic cipher filling in mechanism, the normal printing mechanism, etc., etc.

Another invention shown in this same patent consists of means for varying the tension of the hammer springs so as to make the hammer strike heavier or lighter blows to be regulated by the operator as occasion may require. This feature, though put in the roll paper machines, is of no particular value for carbon work in the roll paper machine, because it isn't practical to use carbon paper in a roll paper machine, but is of great value—in fact is almost a necessity—for wide paper machines where duplicate copies are to be made by means of carbon paper.

Patent No. 578,919, *filed April* 3, 1896, *and issued March* 16, 1897.

In this patent is shown two inventions, both pertaining to the ink ribbon controlling devices. One of them is an automatic warning bell, to warn the operator to reverse the feed of the ribbon, and the other is a mechanism for automatically reversing the feed of the ribbon

(Second) Deposition of Plaintiff's Witness Dorr E. Felt, stipulated in from Burroughs case.

without any attention on the part of the operator. Both of these inventions are based on the idea already mentioned, of having the mere absence of the ribbon at a particular point on the ribbon body in one case ring an alarm bell and in the other case put into operation the reversal of the feed of the ribbon.

Patent No. 590,972, *filed April* 28, 1897, *and issued October* 5, 1897.

The invention in this patent is a device for printing two copies at once, both original ink copies, no carbon being used at all. This is the one invention referred to above as applicable only to a roll paper machine. Roll paper machines having this duplicating feature are still manufactured and sold, as they are better adapted to certain classes of work than any other type of machine.

Adjournment taken until to-morrow at 10 A. M., March 5th.

Met March 5, 1908, at 10 o'clock A. M., pursuant to adjournment. Present, as before.

The WITNESS (continuing answer to Q. 77):

Patent No. 661,121, *filed May* 2, 1898, *issued November* 6, 1900.

This patent discloses a roll paper Comptograph and was submitted to the attorneys at the same time as was the data for the patent in suit and represents in detail the adding mechanism used in all the wide paper Comptographs made by the Felt & Tarrant Manufacturing Company as well as all those features of the printing mechanism in such wide paper Comptographs except in respect to modifications which were necessarily different in a wide paper Comptograph from what it is in a roll paper Comptograph. In fact, the details of the drawings

(Second) Deposition of Plaintiff's Witness Dorr E. Felt, stipulated in from Burroughs case.

of the two patents are identically the same in all respects except those features which pertain to the wide paper Comptograph. Many of the features claimed in this patent No. 661,121 are matters of refinement and perfection of the key set mechanism explained about in connection with Patent No. 568,021. Others are features of original function, etc.

One invention shown in this patent pertains to the means for operating and controlling the carrying mechanism so as to make it possible to lighten the carrying springs, and therefore the power required to operate the machine.

Another invention shown in this same patent, No. 661,-121, consists of a very ingenious interlocking device to prevent the operator from injuring the machine by applying excessive force, while at the same time trying to operate simultaneously the answer printing plunger and the canceling mechanism, or operating the answer printing lever and the main operating lever of the machine, or operating the answer plunger and the main operating lever of the machine simultaneously, or operating simultaneously the canceling mechanism with the main operating lever of the machine.

Another invention was designed to reduce the noise made by the machine in operation by introduction of a toggle-joint and connection with the return motion of the carrying controlling device.

Another invention disclosed in this patent consisted of mechanism which released the main operating lever and its connections from the power of the main return spring at different points in the return movement, only allowing those springs to exert their power to return the main operating lever at that point or points where its power was needed, thus making the operation of the machine lighter.

(Second) Deposition of Plaintiff's Witness Dorr E. Felt, stipulated in from Burroughs case.

Another invention in this patent consisted of so arranging and shaping the paper feeding pawl that when all the parts of the machine were in their normal position of rest, the operator could readily turn the paper backwards or forwards by simply rotating the knob on the end of the paper roll. This device is of some value in a roll paper machine, but its principal value is in connection with the wide paper machine, where the paper has to be repeatedly turned backwards to start a new column. In the old 1890 model this was provided for by a lever which the operator grasped with the third finger while turning the roll with the thumb and first finger.

Another invention shown in this patent consists in mechanism which relieves the hammers from the tension of their impelling springs just before the hammer reaches the type, so that the blow is struck and impressed by the momentum acquired by the hammer, which immediately drops back away from the type, thus contributing to neater printing.

Patent No. 628,176, *filed May* 31, 1898, *and issued July* 4, 1899.

This patent, which contains the claims involved in this suit, discloses also other inventions which are applicable only to a wide paper machine. One of these is an automatic alarm to warn the operator and prevent him from running the sheet of paper clear out of the bite of the rolls, and thereby lose all the work done on the sheet that he has been using because of adding numbers into the register of the machine which are not printed on the paper or else printed one right on top of another so as to be unreadable. This invention I have already described as having put on the 1890 model in 1896.

Another invention disclosed in this patent is a device for automatically returning the paper and setting it over

(Second) Deposition of Plaintiff's Witness Dorr E. Felt, stipulated in from Burroughs case.

in position to start a new column by the simple operation of depressing a lever so as to greatly facilitate the rapid handling of sheet paper and enable the operator at the conclusion of one column to begin another without loss of time or interruption, in such manner that the items in both columns will come in perfect alignment with one another when printed.

It also contains some other improvements applicable only to the wide paper machines pertaining to handling and printing on sheet paper, one of which is an arrangement which permits the operator to put the paper in top end foremost as distinguished from the method of putting it into the 1890 model, and another is connected with the answer printing, wherein it is changed so as to permit of its use in connection with sheet paper work.

I have mentioned these inventions in the order in which patent was applied for for them, which does not in all cases represent the order or time in which the inventions were conceived and put into practice. It is obvious that they could not have been made after a patent was applied for, but some of them were made and put into practice even before the next preceding patent was applied for.

Q. 78. Mr. Felt, you have above detailed your work in respect to making a number of inventions and improvements applicable to use in the wide frame mechine of the kind shown in the Felt 1890 model, for adding and listing numbers in columns on a wide sheet of paper, and which inventions were made from time to time after the completion of the 1890 model, and before the application for the patent in suit. Now, I should like to ask you what you would have done if you had got enough money to put the machine on the market at any time between 1890 and 1898. Would you have put the machine on the market without waiting for the improvements or would you have waited for the improvements?

(Second) Deposition of Plaintiff's Witness Dorr E. Felt, stipulated in from Burroughs case.

A. I certainly would have put it on the market just as it was in 1890, improving it gradually, just the same as I put on the market the roll paper machine, or in other words, kept in the market with the roll paper machine which was just like the 1890 model, as far as it went, in 1890, into which I introduced these improvements, or some of them, as fast as they were developed. As a matter of fact, I did everything in my power to induce Mr. Tarrant to advance sufficient money so that I could put this machine on the market, and when I found that I could not get it of him I tried in every way possible to obtain outside capital for the Felt & Tarrant Manufacturing Company, so that I could put this wide paper machine on the market.

Q. 79. What were your daily duties and work in connection with the business of the Felt & Tarrant Manufacturing Company from 1890 to 1898, covering the period between your inventing of the 1890 machine and your application for the patent in suit?

A. I personally superintended the work in the shop, and after the summer of 1890 attended to all the correspondence and advertising, purchased all the materials, looked after what few agents we had in the early '90s, trained them and trained operators for the machines and personally did a good deal of soliciting of orders myself and personally attended to all the general business of the Company except the accounting. In fact, I attended to all the agents and correspondence way up to 1898, at which time we probably had eight or ten selling agents. I did everything except the mere physical work of making the machines and the accounting in connection with the business of the Felt & Tarrant Manufacturing Company.

Q. 80. What was the condition of your health during that period from 1890 to 1898?

A. I was more or less ill practically all of that time.

(Second) Deposition of Plaintiff's Witness Dorr E. Felt, stipulated in from Burroughs case.

In 1894, after several years of very severe headaches, I had spells of dizziness or unconsciousness, when I would be taken suddenly dizzy and everything would turn black and I would be unconscious and collapse completely limp for some minutes at a time. I took a short rest in the summer of '94, which, while it didn't help me much, served to tide over, and then for two or three years, whenever I found by my condition that a break-down was approaching I would have to desist from concentrated thought. During this time I walked to and from the factory, two or three miles, rain, snow or shine, every day, as I thought this benefited me somewhat. During the years '94, '95 and '96 I was troubled with insomnia to an extreme degree, sometimes I wouldn't sleep but a few hours in a whole week and often not a minute for two or three days in succession. When I would almost fall asleep I would be aroused by a flash of light in the head, which was so exceedingly distressing that at times I was even afraid to try to go to sleep. The physician said that it was due to congestion of the capillary blood vessels of the brain. I had extreme headaches during all of that period, practically daily.

Q. 81. After the testimony was taken in the first case against the Universal Company, the case in which Mr. Rector filed a brief in the Court of Appeals, and I mean after you had given your deposition in that case concerning the making by you of the machine "Exhibit Felt's 1890 Model," would you have been willing to give to Mr. Rector all the information concerning the history of that machine and of your efforts in relation thereto, of your poverty and of your sickness, and of your struggles to improve it, which you have given in this deposition, if he had wanted such information?

A. I certainly would have done so freely.

Q. 82. Did he ever ask for such information that you know of?

(Second) Deposition of Plaintiff's Witness Dorr E. Felt, stipulated in from Burroughs case.

A. Not that I know of.

Adjournment taken until to-morrow morning at 10 o'clock, March 5, 1908.

Met pursuant to adjournment, March 6, 1908, at 10 o'clock in the morning. Present, as before.

Cross-Examination by Mr. Rector.

By Mr. RECTOR: The entire deposition of the witness is objected to as irrelevant to the issue made by the pleadings in this case and the witness is cross-examined without waiver of such objection or any of the other objections which have been entered of record during his direct examination.

By Mr. MUNDAY: In view of the foregoing objection, all cross-examination of this witness is hereby objected to since neither the counsel nor the litigant is permitted to simultaneously take two positions, antagonistic to each other.

X-Q. 83. Mr. Felt, you have stated that you are the president of the Felt & Tarrant Manufacturing Company and have held that office since the organization of the company in the year 1889, but have not stated, I believe, what connection, if any, you have with the Comptograph Company, the complainant in this case. Will you please state?

A. I own about one-fifth of the stock of the Comptograph Company. I am a director of the Comptograph Company and vice-president of the Comptograph Company.

X-Q. 84. You have also referred a number of times to Mr. Robert Tarrant. Will you please state what connection, if any, Mr. Tarrant has with the Felt & Tarrant Manufacturing Company and with the Comptograph Company?

A. Mr. Tarrant is a director of both companies. He

(Second) Deposition of Plaintiff's Witness Dorr E. Felt, stipulated in from Burroughs case.

is president of the Comptograph Company and treasurer of the Felt & Tarrant Manufacturing Company.

X-Q. 85. Where does Mr. Tarrant live?

A. No. 72 Park avenue, Chicago.

X-Q. 86. Do you know whether Mr. Tarrant is in Chicago at the present time?

A. I do not. He has the last few weeks been in Mexico, and he is expected back about this time.

X-Q. 87. I believe you have stated that the capital stock of the Felt & Tarrant Manufacturing Company, at the date of its organization in 1889, was $40,000. Is that correct?

A. That is correct.

X-Q. 88. And you owned nine-sixteenths of the capital stock of the company?

A. Yes.

X-Q. 89. Was the capital stock of that company paid up stock at that time?

A. The capital stock of the company was issued in payment for the special tools, adding machines and parts of adding machines and the patents owned by the old Felt & Tarrant partnership.

X-Q. 90. You have also stated, I believe, that in 1891 the capital stock of the Felt & Tarrant Manufacturing Company was increased to $800,000. Is that correct?

A. That is correct.

X-Q. 91. And you continued to own a majority of the capital stock of the company after that increase?

A. I did so up to January 20, 1898.

X-Q. 92. You have stated, I believe, that in January, 1898, you transferred a portion of your stock in the Felt & Tarrant Manufacturing Company to Mr. Tarrant in liquidation of your indebtedness to him. How much stock did you transfer to Mr. Tarrant at that time and for that purpose?

(Second) Deposition of Plaintiff's Witness Dorr E. Felt, stipulated in from Burroughs case.

A. Before the transfer I owned eighteen thirty-seconds of all the stock outstanding, that is, not in the treasury, which was about four thousand and two or three shares. After the transfer I owned fifteen thirty-seconds of all the stock outstanding. Therefore, as I figure it, it must have been about 475 shares; par value of $100 each.

X-Q. 93. The total amount of the outstanding capital stock of the Felt & Tarrant Manufacturing Company, at the time of this transfer to Mr. Tarrant, was a few shares over four thousand shares, as I understand you. Is that correct?

A. Yes.

X-Q. 94. When did you begin the manufacture of the adding machine which you have referred to as your "Comptometer"?

A. In '87 or '88 I engaged with Mr. Tarrant in the manufacture of the Comptometer in a regular way with special tools. Prior to that time I had made eight machines by hand, all of which, I think, went into practical use and were used daily for from ten to fifteen years thereafter. Before that I had made one Comptometer out of metal, in 1886. The year before that, in 1885, I had made a machine partly out of wood and partly out of metal, a very crude affair, which represented the general organization of the machine, but it didn't work very satisfactorily, when operated rapidly because it was so crude.

X-Q. 95. Your Comptometers, as I understand you, were manufactured by the partnership of Felt & Tarrant until the organization of the Felt & Tarrant Manufacturing Company in 1889?

A. Yes.

X-Q. 96. And the assets of the Felt & Tarrant partnership, relating to such Comptometers, were trans-

(Second) Deposition of Plaintiff's Witness Dorr E. Felt, stipulated in from Burroughs case.

ferred to the new company in payment of its capital stock of $40,000?

A. Yes.

X-Q. 97. How long did the Felt & Tarrant Manufacturing Company continue to carry on the manufacture and sale of your Comptometers?

A. They have continued up to the present time.

X-Q. 98. Did the partnership of Felt & Tarrant make any profit out of its manufacture and sale of Comptometers, prior to the organization of the Felt & Tarrant Manufacturing Company?

A. It did not. The cost of selling exceeded the total receipts.

X-Q. 99. Has the Felt & Tarrant Manufacturing Company made any profit out of the manufacture and sale of your Comptometers?

A. Yes, it has. Very large profits during recent years.

X-Q. 100. Can you state when the Felt & Tarrant Manufacturing Company first began to make a profit out of the manufacture and sale of your Comptometers?

A. I think the first dividends paid by the Felt & Tarrant Manufacturing Company were paid in 1902 or 1903; I think the latter year. None whatever was paid before 1902.

X-Q. 101. That hardly answers my question, since the company may have made a great deal of profit prior to that without paying any dividends. Can you not state when the actual manufacture and sale of your Comptometers began to be profitable to the company?

A. I should say in about 1897 or 1898, when, as my direct testimony shows, the Felt & Tarrant Manufacturing Company began to reduce its indebtedness to Robert Tarrant. Even at that time, if any profit had been made, it was not sufficient to meet the necessities of the business in the way of working capital.

(Second) Deposition of Plaintiff's Witness Dorr E. Felt, stipulated in from Burroughs case.

X-Q. 102. Was there any substantial increase in the net assets of the company during the first eight or ten years of its existence?

A. Whatever increase there was consisted of special tools, dies, jigs, perhaps ten or twelve thousand dollars worth, and in an increase of a few machines for use in putting on trial and making sales; perhaps three hundred machines, which we inventoried at about $30 apiece.

X-Q. 103. What was the selling price of those machines?

A. To the user the price was $125.

X-Q. 104. When did you build your first adding machine, which you have referred to as your "Roll Paper Comptograph"?

A. Some time prior to January 19, 1888, when the first patent on an adding listing machine was applied for by me. It was some time in the year 1887.

X-Q. 105. Did the partnership of Felt & Tarrant manufacture and sell these roll paper Comptographs prior to the organization of the Felt & Tarrant Manufacturing Company in 1889?

A. They manufactured some in the latter part of 1888 or in the early part of 1889, the first of which was sold in September, '89. I should suppose that the bulk of this work was done after the company was organized.

X-Q. 106. And did the Felt & Tarrant Manufacturing Company continue from that time to carry on the manufacture and sale of the roll paper Comptograph?

A. It did so until the organization of the Comptograph Company, or shortly prior to that time, when they began to make wide paper Comptographs only, some time in 1898.

X-Q. 107. When was the Comptograph Company organized?

A. Mr. Wyeth testifies, as I see by referring to his

(Second) Deposition of Plaintiff's Witness Dorr E. Felt, stipulated in from Burroughs case.

testimony, that the Comptograph Company was organized in the early part of 1902, and I have no doubt he has stated it correctly.

X-Q. 108. Did the Felt & Tarrant Manufacturing Company make any profit out of the manufacture and sale of your roll paper Comptographs prior ot the organization of the Comptograph Company in 1902?

A. I think they did not. The Comptometer and Comptograph business was all thrown in together, so that there was no separate account taken of either one.

X-Q. 109. So that any profits that may have been made from the manufacture and sale of Comptometers were used in the development and manufacture and sale of Comptographs. Is that correct?

A. If there were any profits at all, such profits went into increased tools, and stock of machines for selling, both Comptographs and Comptometers.

X-Q. 110. The first roll paper Comptographs that the Felt & Tarrant Company manufactured were, as I understand your direct testimony, like the sample machine which has been produced here and offered in evidence as "Complainant's Exhibit, Roll Paper Comptographs." Is that correct?

A. That is the first that we made that we actually sold. We made several machines before that type of machine was made that we did not sell.

X-Q. 111. This particular machine which is in evidence was placed on trial with a Pittsburg bank some time in 1889 and subsequently sold to such bank, as I understand your testimony?

A. It was placed on trial in that bank in the summer or spring of 1889. It was billed to that bank in response to a check received from them in payment for it, in June, 1890, but they had definitely promised to purchase it long prior to that time.

(Second) Deposition of Plaintiff's Witness Dorr E. Felt, stipulated in from Burroughs case.

X-Q. 112. How long did the Felt & Tarrant Manufacturing Company continue to manufacture and sell roll paper Comptographs like this exhibit machine, "Complainant's Exhibit, Roll Paper Comptograph"?

A. It is hard to say just how long it continued to manufacture a machine identically like this, as gradual changes were being made in the machine all along. They sold machines identically like this even after they had been making a machine that had been considerably modified and changed in essential particulars.

X-Q. 113. Can you state approximately how long after the year 1889 the Felt & Tarrant Company continued to regularly manufacture roll paper Comptographs substantially like this exhibit machine?

A. It is hard to say just what change would constitute a substantial difference in the machine. Perhaps the most important one consisted of putting into it an automatic answer printing device, which was done some time prior to November 11, 1890. Another considerable change in the machine consisted of putting the power in to do the printing through the main operating lever which was done some time prior to June, 1895. Another, —when this particular machine was originally sold, am uncertain as to whether or not the automatic cipher printing mechanism was in it, as I recollect that was put in after it was sold, which on account of its extreme simplicity in proportion to the efficiency which was added to the machine, was perhaps the most important of all. This cipher printing mechanism was first invented in its fundamental principle by me and is used in every multiple column adding-listing machine now on the market.

X-Q. 114. What facilities had the Felt & Tarrant Company for the manufacture of your roll paper Comptographs during the years 1890 to 1895 inclusive?

A. In addition to the special dies, jigs, etc., used in

(Second) Deposition of Plaintiff's Witness Dorr E. Felt, stipulated in from Burroughs case.

the manufacture of the Comptometer, some of which could be employed in the manufacture of the roll paper Comptograph, we had a few special tools used in the manufacture of roll paper Comptographs, which were made specially therefor. We did not have the exclusive use of any of the tools in Mr. Tarrant's shop, such as lathes, milling machines, etc., but could use a very few of his smaller machine tools when he did not have use for them in his personal machine shop business. I think there was probably one press, two milling machines and four or five small lathes and drill press, and I believe that during this period, there were one or two presses added.

X-Q. 115. How many "special tools used in the manufacture of roll paper Comptographs," and specially made therefor, did the company have during this period? You have said a "few." Can you give us some idea of the number of them and their approximate value?

A. That would be a very difficult thing to do; even to give the number of them would run into the hundreds and the cost would be from a dollar a piece for little counterbores, etc., up to some costing a hundred or more dollars. such as a jig or a die. It would be impossible to say just what we had in any one of these years, as we kept accumulating some all along.

X-Q. 116. Would you say that by the year 1895 the company had as many as ten thousand dollars worth of special tools used exclusively in the manufacture of its roll paper Comptographs?

A. I think that five or six thousand dollars would be nearer right.

X-Q. 117. And how much was this equipment increased during the succeeding two or three years—say by 1898?

A. I cannot state positively, but probably four or five thousand dollars more.

(Second) Deposition of Plaintiff's Witness Dorr E. Felt, stipulated in from Burroughs case.

X-Q. 118. How many separate parts or pieces were there in the roll paper Comptograph as manufactured by the Felt & Tarrant Company in the years 1895, 1896 and 1897, or about that time?

A. Just about eighteen hundred, including those pieces that were the same both in the Comptograph and the Comptometer, or nearly the same.

X-Q. 119. In the course of your answer to Q. 77 of your direct examination, and in connection with your discussion of your patent No. 568,021, you say:

> "Up to 1894 all Comptographs made by the Felt & Tarrant Manufacturing Company printed in each separate column immediately at the conclusion of the depression of a key in the column, so in that year I reorganized the entire machine so that the operator would first touch all the keys without producing any actuation of either the printing or adding mechanism, and then if he made a mistake in touching the keys, he could release them and reset them for operating the main operating lever of the machine, which then served to actuate all the parts to add and print the number represented by the keys set on the keyboard."

Prior to this reorganization of the machine, what changes had you made and embodied in your roll paper Comptographs such as the exhibit machine, "Complainant's Exhibit, Roll Paper Comptograph."

A. An automatic answer printing mechanism transferring the power to operate the carrying, in regard to its source, from the keys to the main operating lever; an automatic canceling device, that is, mechanism for turning to zero; a device for making the process of subtraction on the machine purely mechanical; a device for making it possible to print the ciphers automatically without touching any key therefor, regardless of the order in which the keys for any number were struck in a key driven machine; a device for eliminating the ciphers to the left of the left hand significant figures in the answer

(Second) Deposition of Plaintiff's Witness Dorr E. Felt, stipulated in from Burroughs case.

printed; an interlocking device to prevent disordering the machine in the operation of canceling, either intentionally or otherwise. When I converted the machine into a lever driven machine, I again adopted my original automatic cipher printing device such as is in this 1890 model, and which in a lever driven machine properly fills in the ciphers regardless of the order in which the keys are touched.

X- Q. 120. The reorganization of the machine referred to in the portion of your direct examination quoted in my last question, converted the machine from a key-driven machine into a lever-driven machine, as I understand you. Is that correct?

A. Yes, that is correct.

X-Q. 121. When was this reorganization of the machine actually made and the new mode of operation embodied in the roll paper Comptograph manufactured and sold by the Felt & Tarrant Company?

A. I cannot say definitely, but from details of construction which I recognize in the patent applied for June 14, 1895, No. 568,021, it was made some considerable time, probably a year or more prior to the date of that application, as the patent shows some details that were not in the very first lever operated machine manufactured.

X-Q. 122. Now, after this reorganization of your roll paper Comptograph, and conversion of it from a key-driven into a lever-driven machine, some time prior to the year 1895, what was the next change in or improvement upon the machine which you made?

A. It was an automatic alarm to warn the operator when the ribbon approached its end in the ribbon-feeding operation.

X-Q. 123. When was that improvement actually put into the machine manufactured and sold by the Felt & Tarrant Manufacturing Company?

(Second) Deposition of Plaintiff's Witness Dorr E. Felt, stipulated in from Burroughs case.

A. Some time prior to April 3, 1896, the date of application for Patent No. 578, 919. This improvement was put into machines then being constructed or finished; that is, regular machines for the market.

X-Q. 124. After this automatic inking ribbon alarm device, what was the next change in or improvement upon your roll paper Comptograph that you made?

A. It was a device for printing two copies from one single ribbon.

X-Q. 125. And when was that device put into the machines regularly manufactured and sold by the Felt & Tarrant Company?

A. It was put into one machine immediately sold just about the date or a little before April 28, 1897, the date of the application for Patent No. 590,972. I am inclined to believe that the machine was first sold and then it was taken and the slight change necessary to its introduction made on it. Other machines made with this feature in it along about that time or shortly thereafter, but not all of the roll paper Comptographs, were so made.

X-Q. 126. After this device for printing two copies from a single ribbon was embodied in the roll paper Comptographs manufactured and sold by the Felt & Tarrant Company, what was the next change in or addition to the machine which you made?

A. I cannot say just what was the next. There were a great many slight changes made between April, 1897, and the date of the application, May 2, 1898, resulting in Patent No. 651,121. Many of these were details of design and construction as would naturally follow consequent upon the getting up of more automatic special tools to take the place, to some extent, of the work which had been done previously mostly by hand or by means of very simple special tools. Some of the functional inventions disclosed in this patent consist in the changes of the main controller for the carrying; an interlocking device be-

(Second) Deposition of Plaintiff's Witness Dorr E. Felt, stipulated in from Burroughs case.

tween the answer printing mechanism, the main operating lever mechanism and the canceling mechanism; a device for regulating the tension of the return spring on the main lever operation mechanism to different degrees of force exerted on the main lever operating mechanism at different points through the stroke of the main operating lever; another pertained to the paper feeding pawl to facilitate turning the paper back; another pertained to the hammer mechanism to effect neater printing. Probably a good many of these improvements were made even prior to the application for the patent for the ribbon alarm bell, April 3, 1896, or the duplicating mechanism, April 28, 1897. I am speaking here with special reference to roll paper machines, but possibly some of these things shown in this Patent No. 661,121 never got into any roll paper machine, but were first put into wide paper machines, but I cannot be sure about that.

X-Q. 127. I judge from your several preceding answers, and from your reference to the dates of application for your various patents in fixing the times when your various improvements were actually put into the roll paper Comptographs manufactured and sold by the Felt & Tarrant Company, that these various improvements which were put into those machines from time to time, were actually embodied in machines regularly manufactured for the market before you filed your applications for patents upon them. Is that the fact?

A. I think they all were.

X-Q. 128. Now, after your application of May 2, 1898, for Patent No. 651,121, or after the embodiment in your roll paper Comptographs of such of the features covered by that patent as were embodied in those machines, what was the next change, in or addition to the roll paper Comptographs regularly manufactured and sold by the Felt & Tarrant Company?

(Second) Deposition of Plaintiff's Witness Dorr E. Felt, stipulated in from Burroughs case.

A. I don't think we made any changes or improvements in the roll paper Comptograph after that time. In fact, we didn't make any except to clean up and assemble some machines to use up such parts as had been previously made which were usable only in roll paper Comptographs. We may have made some parts to even out.

X-Q. 129. When did the Felt & Tarrant Manufacturing Company wholly discontinue the manufacture of your roll paper Comptographs? When were the last of such machines actually assembled in its factory and sent out to be sold?

A. I think there were some assembled clear up to the time when they turned the business over to the Comptograph Company.

X-Q. 130. That was in 1902, I believe?

A. Yes.

X-Q. 131. When did you or the Felt & Tarrant Manufacturing Company build your first wide paper Comptograph machine? I, of course, do not refer to your 1890 model.

A. In the exact form in which it was first put on the market, the first wide paper machine was completed some time between May 31, 1898, and July 13, 1899, the date of the application for Patent No. 644,287. There were several experimental models made to ascertain the best form of automatic paper alarm and automatic paper return, during that period and just prior to May 31, 1898.

X-Q. 132. Does Patent No. 644,287 show the exact form in which your wide paper Comptograph was first place on the market?

A. Yes, the drawings for this patent were made from one of the manufactured machines.

X-Q. 133. Referring back to X-Q. 131 and your answer thereto, you say that "in the exact form in which it was first put on the market" your first wide paper machine was completed some time between May 31, 1898,

(Second) Deposition of Plaintiff's Witness Dorr E. Felt. stipulated in from Burroughs case.

and July 13, 1899. When did you or the Felt & Tarrant Manufacturing Company build the very first wide paper machine of any kind, excepting, of course, your old 1890 model?

A. Before patent applied for May 31, 1898, No. 628,-176, was applied for, one cast iron Comptograph frame was taken and the paper return mechanism in that patent tried out, or the essential functions of it tried out. The sheet end warning device had been tried out directly on the old 1890 model, in 1895 or 1896, and about the time this patent was applied for or shortly thereafter, or while the application was being prepared by the attorneys, a complete model was gradually made up by experimentation and refinement until it reached the form shown in Patent No. 644,287, but while the parts for the machine were being gotten out, the bell alarm for the sheet-end-warning was converted into a lock which would lock the machine so that the operator could not, by ignoring the bell-warning, feed the paper clear out of the machine, and I am not sure but what the very first machine sold had this locking device put in it in place of the bell.

Adjournment taken until March 7, 1908, at 10 o'clock A. M.

Met March 7 at 10 o'clock in the morning pursuant to adjournment. Present as before.

The WITNESS (continuing answer to X-Q. 133): Last night I said in answer to this question, "I am not sure but what the very first machines sold had this locking device put in it in place of the bell." I have since looked the matter up and find that such was the case, in this identical machine from which the patent drawings were prepared the bell was taken out and the locking device put in before the machine was sold.

X-Q. 134. Referring back to your answer to X- Q. 133,

(Second) Deposition of Plaintiff's Witness Dorr E. Felt, stipulated in from Burroughs case.

when was it that the paper return mechanism was tried out on a cast iron Comptograph frame?

A. Shortly prior to May 31, 1898.

X-Q. 135. Please explain just what you did in trying out this mechanism on the Comptograph frame—just what mechanism you placed on the cast iron frame, and what you did with it?

A. I put in a drum with a clock spring in it and then geared either the drum or flange on the same pivotal point with the drum, I can't say which, to the paper feed rolls of a roll paper Comptograph, also inserted the frame, then put a piece of paper in the bite of the rolls, then wound up the spring by feeding the paper through and then let go to see how rapidly and how much of a jar it would make in going back and stopping. That was the main point to be determined. I may have tried some other things which I cannot recall just now.

X-Q. 136. What sort of a paper carriage, if any, did you put on the old Comptograph frame for the purposes of this test?

A. For the purposes of the critical point just mentioned, I did not put on any paper carriage, that is, laterally movable paper carriage.

X-Q. 137. What became of this old Comptograph frame and the paper return mechanism which you tested on it?

A. I don't know just what became of it. I think very likely it was used afterwards in setting up a roll paper machine, although it may have been used for further experiments on the wide paper machine. It may have been morticed out about that time and a wide carriage put in it, that is, a laterally movable carriage.

X-Q. 138. What became of the paper return mechanism after it was tested on this old frame?

A. It was probably thrown into a box of experimental parts among a great many others.

(Second) Deposition of Plaintiff's Witness Dorr E. Felt, stipulated in from Burroughs case.

X-Q. 139. Has it been preserved so that you could now find it?

A. Very likely it has. The Comptograph Company, when they took over that end of the business, moved a great deal of stuff away, but I don't think this went with it. It would be more likely to be found at the new factory of the Felt & Tarrant Manufacturing Company. I do not think that they lost those kind of things when moving about a year ago.

X-Q. 140. Will you please be kind enough to ascertain if this old paper return mechanism which you have described can be found, and if so, produce it here at the continuation of your examination next week?

A. I will, when you give me a day to look for it.

X-Q. 141. If my request for the "paper return mechanism" should not be sufficiently comprehensive to cover all of the mechanism that you put on the old Comptograph frame for the purpose of the test described, I should like you to produce any of the additional mechanism that you are able to find.

A. I will do so.

X-Q. 142. From what were the drawings for the application for your Patent No. 628,176 here in suit prepared?

A. Mr. Curtis prepared them, having before him the 1890 model and two or three sheets of drawings made by myself, what I would call study drawings or experimental drawings used to guide him in showing the wide paper feature and mechanism of the 1890 model applied to the type of roll paper Comptograph we were then manufacturing with the paper return mechanism and the paper alarm added thereto.

X-Q. 143. Was that all—the old 1890 model and the drawings you have mentioned—that Mr. Curtis had to work from in making drawings for your application for the patent in suit?

(Second) Deposition of Plaintiff's Witness Dorr E. Felt, stipulated in from Burroughs case.

A. He also had before him a roll paper machine such as we were then manufacturing. Whether or not he had any try-out devices before him or not, I cannot recollect, but I do not think he did have.

X-Q. 144. Under whose immediate instructions or directions did Mr. Curtis work in preparing the drawings for your patent in suit?

A. Under my own.

X-Q. 145. How much time and attention did you give to those drawings while Mr. Curtis was working on them?

A. I cannot say as to that. I had several interviews with him.

X-Q. 146. Where did Mr. Curtis make these drawings?

A. In the office of Munday, Evarts & Adcock, patent attorneys.

X-Q. 147. Was Mr. Curtis a draftsman in the employ of that firm?

A. He was.

X-Q. 148. Do you know whether he is still in the employ of that firm?

A. He is not. He is now connected with a firm in Chicago, making expanded metal. I believe it is the Northwestern Expanded Metal Company.

X-Q. 149. Referring to your answer to X-Q. 142, what became of the "two or three sheets of drawings" which you supplied to Mr. Curtis for his use in making the drawings for your patent here in suit?

A. I still have those drawings. In making further experiments and modifications, a great deal of what was on them when Mr. Curtis had them, has been erased and new pencil lines substituted, it being more convenient to use a sheet of paper on which all the principal points of the machine are laid out in making modifications and changes or studies. They have since been used for that purpose instead of laying out the points on a new sheet of paper.

(Second) Deposition of Plaintiff's Witness Dorr E. Felt, stipulated in from Burroughs case.

X-Q. 150. When did you make those two or three sets of drawings which you supplied to Mr. Curtis and from which he worked in preparing the drawings for the patents here in suit?

A. They were worked on by me from time to time through some months prior to the time I brought it to Mr. Curtis. I cannot say now definitely how many months, but it was some considerable time.

X-Q. 151. When Mr. Curtis had the old 1890 model before him, in the preparation of the drawing for the patent in suit, was that model provided with the alarm bell mechanism which you say you had placed on it some years before?

A. The alarm bell mechanism—at least part of it, was not then on the machine. One of the supports for this alarm bell or sheet end warning mechanism was then on the machine. It can now be seen on the machine as a piece of sheet metal about a sixteenth of an inch thick at the extreme right hand end of the paper carriage near the knob for turning the paper by hand. In one of the gears on the right hand end of the paper carriage there are also nine pins which were put on for vibrating the bell clapper. I think the whole of it was on the machine, but some time between now and the time when this was originally put on the machine, the other support for the alarm bell mechanism which was soldered to one of the uprights of the paper carriage, became unsoldered and the alarm bell mechanism dropped off. There was another thing which was certainly on the machine at that time, which was a slot through one of the paper guides for the paper feeder on the alarm bell mechanism to stick through and reach into the slot in the big paper feeding roll, the slots in the paper guide and the roll of course having been put in when the bell was first attached to the machine.

X-Q. 152. Which one of your patents, if any, describes

(Second) Deposition of Plaintiff's Witness Dorr E. Felt, stipulated in from Burroughs case.

and claims this alarm bell mechanism of your old 1890 model?

A. Patent No. 628,176 describes this alarm bell mechanism and claims it in all essentials just like the 1890 model, except that all the parts pertaining to it are differently positioned in the machine. And of course, there being three paper rolls in the patent and only two on the 1890 model and numerous other changes in the construction of the machine since the bell was originally put on the 1890 model. Of course, the bell in the patent, and its mechanism doesn't look at all like the bell on the 1890 model, but in reality it is practically the same invention.

X-Q. 153. Was this rearrangement of the bell mechanism, and the other changes in the construction of the machine to which you have referred, shown in the drawings which you supplied to Mr. Curtis to work from in preparing the drawings for the patent here in suit?

A. They were.

X-Q. 154. So that in these respects Mr. Curtis followed the drawings which you supplied to him, rather than the 1890 model?

A. Yes, in the matter of construction and arrangement of parts.

X-Q. 155. In your answer to X-Q. 152, referring to the alarm bell mechanism of the 1890 model, you say "Patent No. 628,176 describes this alarm bell mechanism and claims it in all essentials just like the 1890 model," etc., but I am not able to discover any claims in this patent which appear to relate to the alarm bell mechanism at all. Will you please see if you can discover any such claims and point them out?

A. I know the claims for the alarm bell were applied for in that application, but I do not find them among the claims of that patent. I find the locking mechanism to prevent running the sheet clear out of the machine claimed in Patent No. 694,955, application filed November

(Second) Deposition of Plaintiff's Witness Dorr E. Felt, stipulated in from Burroughs case.

19, 1900, and it is evident that we withdrew the claims which were based on the alarm bell in the earlier application and covered the sheet end warning device by claims in the Patent No. 694,955, in which the locking device was shown.

X-Q. 156. Then, as I understand you, you do not find in any of your patents any claims for the alarm bell device of the 1890 model, or claims for any sort of an alarm which is sounded when the bottom of the sheet of paper is reached, to warn the operator of that fact? Is that correct?

A. None on a bell alarm that makes a sound to warn the operator.

X-Q. 157. And the only claims which you find in any of your patents on a sheet end warning device are the claims of your Patent 694,955 on the locking device which automatically locks the machine from operation when the bottom of the sheet is reached?

A. I find none prior to the claims in Patent No. 694,-955 which latter shows a locking device.

X-Q. 158. I do not wish to ask you to take the time or trouble to examine all of your patents on this point, but if you know of any other patents of yours, even later than No. 694,955, which contains claims on any sort of a sheet end warning device, I will be glad if you will state what that patent is.

A. Without making an examination of all the claims in all these patents, I would say that I do not recollect any except those in Patent No. 694,955.

X-Q. 159. When, if ever, did you or the Felt & Tarrant Manufacturing Company build a wide paper Comptograph machine like the drawings of your Patent No. 628,176 here in suit?

cally in all the details just like those drawings in that

A. I don't suppose we ever made a machine identi-particular patent. It is very probable, and doubtless

(Second) Deposition of Plaintiff's Witness Dorr E. Felt, stipulated in from Burroughs case.

true, that while the application for the patent was being prepared, or shortly thereafter, I thought of the overhanging hammer frame mechanism shown in the next succeeding Patent No. 644,287 and that the first complete machine embodying all the various functions pertaining to the paper return and paper alarm in one was begun and built up with the overhanging hammer frame idea, such as is shown in Patent No. 644,287.

X-Q. 160. Then, you had not, prior to the filing of your application for the patent here in suit on May 31, 1898, built any complete wide paper Comptograph machines—excepting the old 1890 model. Is that correct?

A. I think that is correct.

X-Q. 161. What had you done, prior to the filing of that application in the way of actually building such a wide paper Comptograph machine, beyond the construction of the old 1890 model, and the addition to it of the sheet end alarm device in 1895 or 1896, and the test of a paper return mechanism on a roll paper Comptograph frame shortly before your application was filed in 1898?

A. What I did from 1890 up to the time I filed that application in the way of invention nearly all pertains to a wide paper machine just as much as it does to the roll paper machine which I was then manufacturing and selling. Owing to Mr. Tarrant's attitude and the fact that he constantly reiterated the statement that I mustn't fuss with any distinctly new type of machine, but must confine all my efforts absolutely to those we then had on the market, and the fact that the company was terribly hard up for money even to carry on the little business it did have, and was heavily in debt to Mr. Tarrant and that frequently when things did go to please him, he made the threat in so many words that he would throw the whole business out of the building, I did not dare do openly anything with the wide paper model—which he always complained was not necessary—that what we had on the

(Second) Deposition of Plaintiff's Witness Dorr E. Felt, stipulated in from Burroughs case.

market was good enough. So I had to confine my efforts entirely to improving the main features of the adding and printing mechanism which could be employed in both machines and work these improvements in one after another on each succeeding lot of machines gotten out, and in that way do what I could to develop the main body of the machine. Even when this bell mechanism was put on the 1890 model, so that Mr. Tarrant would not know it I went to the bookkeeper and asked him to charge it to work on Comptometers and he did do so. Our necessities for money were so great during all those years that most all the work on Comptographs had to be done almost by hand and in all cases by the use of very simple tools, which in the light of my subsequent experience, and the kind of tools which I use now in the manufacture of the Comptometer would hardly be considered special tools at all, and the process of using them would be called manufacturing machines by hand. As a matter of fact, since the business was turned over to the Comptograph Company, who make this wide paper machine and practically nothing else, they have spent, in addition to the money which they paid Felt & Tarrant Manufacturing Company for the business, over $500,000 in equipping a factory to manufacture this machine, make a stock of parts and get the selling organization going, and they are just scarcely beginning to make money now, and they are not making now one-tenth of one per cent. interest on the money they invested in preparing to make this machine. Practically all that I could do was to develop my machine the best I could under the adverse circumstances under which I was laboring as against the day when I could get money enough to put it on the market in a profitable way. The wide paper machine was always my ideal of what a listing machine should be, and to F. W. DeBerard, our first New York agent, I used to talk about it a great deal. I used to talk about it to Mr. Tarrant's help, thinking if

(Second) Deposition of Plaintiff's Witness Dorr E. Felt, stipulated in from Burroughs case.

I could convince them, they could convince him. I used to talk about it to A. J. DeBerard, our present New York agent, since the first of 1893 or 1894, and only the other day he was telling me about it, how when he was here at the World's Fair in Chicago I said to him that this was the boss machine and referred to the 1890 model. If I did very much, which on the face of it came to Mr. Tarrant's notice, and appeared to be any steps taken towards getting ready for the manufacture of this wide paper machine, he would have just simply discharged the men working on my work, so that I couldn't do anything except sell the machines already made, and his one particular hobby always has been "make what you've got. It's good enough"; and he has a number of stories which he tells to illustrate the point. I don't blame Mr. Tarrant a particle for his attitude. He wasn't in touch with the manufacture and selling of adding machines, as I was. He couldn't see the future of it, nor realize the necessities of the business. I couldn't part with him, losing everything, including years of work, and he at the same time would have lost a great deal if he had shut down on the business on account of my insisting on carrying out my ideas, so I had to stick it through the best I could. I knew that Mr. Tarrant's friends thought that all the money that he was putting in the adding machine business was being wasted, and I don't wonder that he worried and was at times arbitrary. I may have made other try-outs just shortly prior to the filing of this application, and probably did, but I cannot recollect any at this moment except trying out the spring action for the return of the paper.

By Mr. RECTOR: All of the answer excepting the first sentence and the last one is objected to as irresponsive to the question.

X-Q. 162. My question called for information as to what you had done, prior to the filing of the application

(Second) Deposition of Plaintiff's Witness Dorr E. Felt, stipulated in from Burroughs case.

for the patent here in suit, in the way of *actually building* a wide paper Comptograph machine. Will you please state what, if anything, in the way of actual physical work on any such machine you had done prior to the filing of your application, excepting the building of the old model in 1899 and '90, the addition of the sheet alarm device to it in 1895 and '96, and the test of the paper return mechanism on the old Comptograph frame shortly prior to the filing of your application on May 31, 1898?

By Mr. MUNDAY: Question objected to as a mere repetition of the former question.

A. As far as actually building a machine with a wide paper carriage on it, I think that is all, but when I go to look for what Mr. Rector asks me to find and bring down, my memory may be refreshed very materially.

Adjournment taken until March 9, 1908, at 10 A. M.

Met March 9th, at 10 o'clock in the morning, pursuant to adjournment. Present as before.

X-Q. 163. Mr. Felt, what was the first complete wide paper carriage Comptograph which you or the Felt & Tarrant Manufacturing Company ever made, and when was it made? I, of course, exclude from the question the old 1890 model.

By Mr. MUNDAY: The question is objected to on the ground that the exception is utterly inconsistent with the question. The 1890 model machine was itself a complete wide paper Comptograph, as appears by the testimony. And there cannot be two first things of the same kind. The question is therefore utterly unanswerable and utterly unintelligible. Moreover, it is liable to mislead the witness and mislead the court.

A. I could have answered this question more specifically, I think, if Mr. Rector had permitted me to carry out my suggestion of Saturday or Friday that I go to the factory today and look among old models or parts of mod-

(Second) Deposition of Plaintiff's Witness Dorr E. Felt, stipulated in from Burroughs case.

els so as to refresh my memory on this point, and at the same time produce such articles of that kind as I could find which he instructed me to get last week. My impression is that I made a wide paper machine just about the time the patent in suit was applied for that was in most all respects like the patent, and then changed that machine to one with the overhanging hammer-frame, which eventuated in machine No. 1800 sold to the Illinois Brick Company, Chicago. The object of the overhanging hammer-frame was to enable the operator to put the paper in from the back of the machine, instead of having to go directly down in front of the hammers and then have it return again as it does in the patent and as it does in all roll paper machines made by the Felt & Tarrant. I believe it was about the time this patent was applied for a complete machine was set up similar in respect to all the details to the patent, yet I am not sure about that. If such a machine was set up, afterward the paper carriage was changed in some details to guide the paper in from the back, and the overhanging hammer-frame was put on, and it eventuated in machine No. 1800 just referred to.

X-Q. 164. When was machine No. 1800 sold to the Illinois Brick Company of Chicago?

A. December 21, 1900.

X-Q. 165. Was that the first wide paper Comptograph machine which you or the Felt & Tarrant Manufacturing Company ever sold?

A. Yes.

X-Q. 166. How long prior to its sale to the Illinois Brick Company was this machine No. 1800 completed?

A. In its original form it was completed a long time prior to that. In the exact form in which it was sold, it was completed probably shortly before being delivered for trial. Machines Nos. 1810 and k 1900 were completed in the shape in which they were sold both on the same

(Second) Deposition of Plaintiff's Witness Dorr E. Felt, stipulated in from Burroughs case.

day, July 19, 1900, and after that 1800 was changed somewhat before it was sold, it having been used prior to that as a matter of reference for making the parts for the first lot of machines turned out in a bunch.

X-Q. 167. What was the change which was made in machine No. 1800 shortly prior to its sale to the Illinois Brick Company?

A. One of the changes was to put in a locking device in place of the alarm bell to be operated by the end of the sheet of the paper, to prevent running the paper out of the machine. Both are operated by the same mechanism, all the difference being that in one case, it locks the machine and in the other case it brings the bell into ringing position. There were undoubtedly other minor changes of details of construction, as there always is when one is building a lot of parts during the time consumed in their construction, as one idea of refinement after another occur to the mind.

X-Q. 168. Can you state when it was that machine No. 1800 was entirely completed in what you have referred to as its original form?

A. I cannot say definitely. I suppose the term "original form" perhaps pertained to the form it was in when we started making the parts for wide paper machines in the way of manufacture. It had doubtless even before that been in complete usable form, but changed more or less in the process of refining it and making it more easy and economical to manufacture as well as changing it to overhanging hammer-frame if it was originally set upon the exact form shown in the patent in suit.

X-Q. 169. Was it this machine No. 1800 which you referred to in your answer to X-Q. 133 where you said:

> "A complete model was gradually made up by experimentation and refinement until it reached the form shown in Patent No. 644,287, but while the parts for the machine were being gotten out, the

(Second) Deposition of Plaintiff's Witness Dorr E. Felt, stipulated in from Burroughs case.

bell alarm for the sheet end warning was converted into a lock which would lock the machine so that the operator could not, by ignoring the bell-warning, feed the paper clear out of the machine.''

A. Yes.

X-Q. 170. To what extent was this machine No. 1800 a hand-made machine, and to what extent a tool-made machine.

A. It was practically all hand made.

X-Q. 171. To what extent were machines Nos. 1810 and 1900 hand-made machines, and to what extent tool-made machines?

A. I should say that some tools were made for blanking out some of the sheet metal parts, such as the U bar 0 in Patent No. 644,287, the hammer-pawl G^1, the tail pieces M^6, etc., and a number of simple drilling jigs, milling cutters, and so forth, the use of which would practically be hand work. On this machine, as compared to a roll paper Comptograph, there are in its manufacture 989 different kinds of operations in making those parts such as are not used in roll paper machines besides those operations required to modify parts used in both to adapt them to a wide paper machine. So it is a pretty difficult thing for me to point out in detail what was hand work and what was special tool work. The term ''hand work'' is a relative term, which in one of the reports of the United States Department of Labor has been discussed at considerable length, and, according to their classification, all of this work in making this first lot of machines would be termed ''hand work.'' But I mean by ''hand work'' filing parts out of sheet or bar metal or shaping them out with a planer or drilling holes with cheaply made jigs as distinguished from substantial and expensively constructed jigs or punching holes with special dies, etc.

(Second) Deposition of Plaintiff's Witness Dorr E. Felt, stipulated in from Burroughs case.

X-Q. 172. How many machines were there in the "first lot of machines" referred to in your last answer?

A. I can't tell definitely, but I think we aimed at one hundred. However, in manufacturing a machine like that, we do not make parts enough of each particular kind for the same number of finished machines, but make more of some parts than others, so that the supply of all the different kinds of parts will not run out at once. Having the supply of some parts run out of stock first, then other parts, and so on, so that they may be gradually replaced without interruption in setting up a machine, and without congestion of the department making parts all at one time.

X-Q. 173. Were machines Nos. 1810 and 1900 the first machines, of this lot of one hundred machines, to be completed?

A. Yes, except 1800, which was probably considered as one of that lot of machines, if it was considered at all in that connection.

X-Q. 174. Can you state what the condition of machine No. 1800 was on July 13, 1899, the date at which you applied for your Patent No. 644,287 to which you have referred?

A. It was doubtless in the condition shown in that patent, as the patent is obviously drawn from that machine, the patent drawings showing numerous details of form and construction devised for economical manufacture.

X-Q. 175. Do you mean that the drawings for this patent No. 644,287 were made from machine No. 1800?

A. Yes.

X-Q. 176. And would you say that the drawings of this patent represented the exact construction of that machine as it existed at the time these drawings were prepared and the application for this patent filed?

A. Yes.

(Second) Deposition of Plaintiff's Witness Dorr E. Felt, stipulated in from Burroughs case.

X-Q. 177. How did the construction of machines Nos. 1810 and 1900, which you say were both completed on the same day, July 19, 1900, resemble or differ from the construction shown in the drawings of this Patent No. 644,287?

A. For one thing they had the locking in place of the alarm bell frequently heretofore referred to, and I believe they did not have the mechanism or clutch represented by C^{3a} and C^{3}, that not having been found as desirable enough to compensate for its cost. And the paper shield H^{3} was very much shorter. There were doubtless other modifications which I cannot now recollect, as this machine contained 440 different kinds of parts, some of which were duplicated, making 2,171 distinct parts in all the machine. Therefore I cannot recollect just what the detail construction of every part was at that particular time.

X-Q. 178. While you are referring to the number of parts in these wide paper Comptograph machines which were built in the year 1900, can you state what was the number of parts in the roll paper Comptograph machines which the Felt & Tarrant Manufacturing Company was manufacturing at that time?

A. Yes. In the roll paper Comptograph manufactured at that time, there were 1,838 parts of 341 different kinds, requiring 2,033 different kinds of operations to make. I will put it in tabular form and include the Comptometer as follows:

	Total number of parts in a machine.	Different kinds of parts.	Different kinds of manufacturing operations.
Comptometer	1,269	120	547
Comptograph	1,838	341	2,033
Tabulator	2,171	440	3,022

By Comptograph I mean roll paper machine and by tabulator I mean wide paper machine.

X-Q. 179. Returning now again to machine No. 1800,

(Second) Deposition of Plaintiff's Witness Dorr E. Felt, stipulated in from Burroughs case.

and assuming that by July 13, 1899, it had been brought to the exact condition shown in the drawings of your patent No. 644,287, which you applied for on that date, will you please state what was then done with that machine—where it was kept, what use was made of it, etc. —up to the time it was sold to the Illinois Brick Company on December 21, 1900?

A. Except when used for making the drawings for the patent it was kept at the factory and used for reference in making the parts for the first lot of wide-paper Comptographs.

X-Q. 180. What was done with machines Nos. 1810 and 1900 after they were completed on July 19, 1900?

A. No. 1900 was billed January 8, 1901, to the American Steel & Wire Company, Chicago, and No. 1810 was billed March 2, 1901, to H. J. Heinze Company, Pittsburg, Pa.

X-Q. 181. Were those two sales the next sales which were made after selling the machine 1800 to the Illinois Brick Company on December 21, 1900?

A. Yes.

X-Q. 182. What finally became of machine No. 1800 which was sold to the Illinois Brick Company on December 21, 1900?

A. It was in the hands of the Illinois Brick Company January 27, 1908, which was the last we ever heard of it.

X-Q. 183. Do you know whether that machine has been continuously in the possession of the Illinois Brick Company from December 21, 1900, down to January 27, 1908?

A. I have no doubt but what it has been.

X-Q. 184. Do you know whether it has ever been back to the factory of the Felt & Tarrant Co. or the Comptograph Co. during that period?

A. Yes, it has.

(Second) Deposition of Plaintiff's Witness Dorr E. Felt, stipulated in from Burroughs case.

X-Q. 185. Do you know whether any alterations have been made in the machine during that period?

A. I am pretty sure that some things have been altered. I think that there proved to be a weakness in the joint between F^5 and the cam piece E^4 of patent No. 644,-287, and that some structural changes connected therewith were made to strengthen it. Possibly some other like changes were made in the machine if it came in for repairs to the factory.

X-Q. 186. Do you recall whether or not this machine ever did come into the factory for repairs?

A. I do not, but I can find out.

X-Q. 187. Do you know whether it was ever repaired by your company while in the possession and at the place of business of the Illinois Brick Company?

A. I have just been informed over the telephone from the office of the Comptograph Company that one of the men called there and saw the machine January 27, 1908, and I infer that he was there to repair it.

X-Q. 188. In view of your offer to ascertain whether this machine ever came in to your company's factory for repairs, I will ask you to please ascertain, when you have occasion to look up other matters inquired about, how often and when this machine No. 1800 was returned to the Felt & Tarrant Company and the Comptograph Company, and just what was done to it, during the period from December 21, 1900, to and including January 27, 1908?

A. I will do so.

X-Q. 189. Do you know what finally became of machine No. 1900 which you say was sold to the American Steel & Wire Company at Chicago, January 8, 1901, and machine No. 1810 which you say was sold to the Heinze Company of Pittsburg, March 2, 1901?

A. On December 24, 1907, machine No. 1900 was in

(Second) Deposition of Plaintiff's Witness Dorr E. Felt, stipulated in from Burroughs case.

use in the office of the American Steel & Wire Company, Cleveland, Ohio, and I have every reason to suppose it is still in use there. I think that originally it was sold, delivered and used in their offices at Chicago. The last record we have on machine 1810 was when it had been taken in trade on a later type of machine from H. J. Heinze & Co., and afterwards sold September 7, 1906, to G. A. Troutman & Sons, in Pennsylvania, as a second-hand machine.

X-Q. 190. Do you know whether any alterations were made in either of these two machines after their original sale in January and March, 1901?

A. No, I could not without seeing the machines.

X-Q. 191. Can you ascertain the facts in this regard when you investigate the record of machine No. 1800?

A. I could not say without seeing the machines.

X-Q. 192. Can you ascertain from your company's record whether either of these machines has ever been returned to the Felt & Tarrant Company or the Comptograph Company, since its original sale, for repairs or alterations; and if so, how often, and when, and what was done to it?

A. I can ascertain whether or not either of these machines were returned to the factory and just when, and what times, if any, they were returned for repairs, but as far as any alteration made on them at that time, the records will not show, as they would be merely minor details relating to strengthening some of the parts.

X-Q. 193. In answer to X-Q. 177, you have stated that machines No. 1810 and 1900, as originally completed on July 19, 1900, differed somewhat in construction from machine No. 1800, and the drawings of your patent No. 644,287 made from the latter machine. Do any of your patents issued subsequently to patent No. 644,287 show the exact construction of these two machines Nos. 1810 and 1900 as originally completed on July 19, 1900?

(Second) Deposition of Plaintiff's Witness Dorr E. Felt, stipulated in from Burroughs case.

A. No subsequent patent shows mechanism anywhere near so much like those machines as originally made and sold, as does the patent No. 644,287, which does as a matter of fact show the identical construction with the exception of some very minor details which I believe I pointed out before. In one respect, patent No. 694,955 shows a greater similarity and that is in respect to locking the machine instead of ringing an alarm bell.

X-Q. 194. Referring now to the first lot of one hundred wide-paper Comptograph machines which you made, of which you say machines Nos. 1810 and 1900, and perhaps machine No. 1890, were the first to be completed, over what period of time following July 19, 1900 (the date of completion of machines No. 1810 and 1900), did the building of these one hundred machines extend?

A. I cannot say from memory, but my impression is that most of them, at least half of them, were set up before the tranfser to the Comptograph Company and parts for others were being made.

X-Q. 195. By transfer to the Comptograph Company, I suppose you mean the sale and transfer of the Comptograph business of the Felt & Tarrant Manufacturing Company, complainant in this case?

A. Yes.

X-Q. 196. Can you state how many of this first lot of one hundred wide-paper Comptograph machines were entirely completed before this transfer of the business to the Comptograph Company?

A. Not any more definitely than I did in answer to the last question.

X-Q. 197. Do you think one-half of them were entirely completed, ready for the market, prior to the transfer?

A. Yes, I do.

X-Q. 198. Do you know how many of them had been actually sold prior to that transfer?

(Second) Deposition of Plaintiff's Witness Dorr E. Felt, stipulated in from Burroughs case.

A. I do not.

X-Q. 199. Can you state approximately or generally, how many?

A. No, I cannot.

X-Q. 200. Assuming that one-half of this first lot of one hundred machines were completed prior to the transfer to the Comptograph Company, can you state to what extent those completed machines were hand-made machines, and to what extent tool-made machines?

A. I don't know as I can any more definitely than I have indicated heretofore in this examination. We were making some tools all along. For instance, I know that the paper shield numbered H^5 in patent No. 644,288, was cut out in a shaper or planer for quite a number of machines which were sold, possibly twenty, possibly a hundred, before a die for it was made, either for blanking or for piercing or for bending. The same might apply to other pieces, but I cannot indicate any more definitely. For instance, piece B^{20} shown in that patent was made at first by a very cheap kind of a die, known as a notching die, and then holes drilled in it with a jig. Some time thereafter, probably after the Comptograph Company took it over, dies for blanking it and dies for piercing it and forms for holding it while it was being rivited together were made. Possibly Felt & Tarrant Company made these, possibly the Comptograph Company made them. The same might apply to a good many other pieces, and does apply. For instance, the piece O of which there are eight different ones in the machine, all just alike except at one end, were first blanked out and then the differences in the end effected by filing them. Afterward dies were made for effecting these differences in the ends and also for piercing the holes in these U bars, which originally were drilled.

X-Q. 201. Do you recall whether or not, at the time the Comptograph business of the Felt & Tarrant Com-

(Second) Deposition of Plaintiff's Witness Dorr E. Felt, stipulated in from Burroughs case.

pany was turned over to the Comptograph Company, any considerable quantity of special tools for the manufacture of Comptographs was included in the transfer?

A. All the special tools we had pertaining especially to Comptographs or tabulators were turned over to the Comptograph Company. There was no special account made of them. Felt & Tarrant simply retained such tools as were used exclusively in the manufacture of Comptometers, or in the manufacture of parts which were similar in both the Comptometer and Comptograph and turned the rest over to the Comptograph Company.

X-Q. 202. Then the Felt & Tarrant Company turned over to the Comptograph Company all of the special tools it had which were used exclusively in the manufacture of roll paper Comptograph machines and wide-paper Comptograph machines?

A. As I remember it, that is correct. By that time, we had specialized the listing machines to an extent where very few tools were used both in listing and non-listing.

X-Q. 203. Of the special tools turned over to the Comptograph Company by the Felt & Tarrant Company, what proportion of them were useful in the manufacture of roll paper Comptographs, and what proportion were useful solely in the manufacture of wide-paper Comptographs?

A. To answer that question would require the services of an accountant to determine for several weeks or several months, since no separate account was ever kept and I don't know that any could be now ascertained.

X-Q. 204. In view of the fact that the Felt & Tarrant Company had been manufacturing roll-paper Comptographs for many years, and had only recently begun the manufacture of wide-paper Comptographs, I suppose the majority in number and value of the special tools turned over to the Comptograph Company by it were tools that

(Second) Deposition of Plaintiff's Witness Dorr E. Felt, stipulated in from Burroughs case.

were used in the manufacture of roll-paper Comptographs, or in the manufacture of both roll-paper and wide-paper Comptographs. Do you think that was the fact?

A. To answer that question would be a good deal of a guess, because the tools for manufacturing roll-paper machines were very meager and the tools required specially for wide-paper features of machines would be very numerous on account of there being so many different kinds of parts in the wide-paper machines. That is, parts where there are only one or two of a kind in a machine as distinguished from parts where there would be eight, nine, or seventy-two in a machine. I should say that the bulk of the tools turned over could be used for both roll-paper and wide-paper machines. To illustrate what makes a proposition of this kind difficult, I will say that oftentimes a part will be made with tools that only cost perhaps four or five dollars, but of course, at relatively great cost for production of parts, and then you make another tool for doing the same thing more automatic, that will cost several hundred dollars, but soon make up the difference in the cost of the tool in economy of cost of manufacturing the parts. It is this latter kind of tools that are necessary to the profitable manufacture of adding listing machines considering the low price at which they sell, and the great precision in which parts must be made. Sometimes an expensive tool for a certain operation is required to insure the extreme accuracy necessary in the parts and sometimes to make their production less expensive and more frequently for both reasons.

X-Q. 205. Can you state, approximately or generally, the total cost value of the special tools for the manufacture of both roll-paper and wide-paper Comptograph machines that were turned over to the Comptograph Company by the Felt & Tarrant Company?

(Second) Deposition of Plaintiff's Witness Dorr E. Felt, stipulated in from Burroughs case.

A. I believe I can state that very closely. I think the net labor cost of those tools, that is, the amount actually paid to workmen in daily wages, amounted to about $15,000, taking no account of the material used in the construction of the tools or of overhead shop expenses, which would be very close to one hundred per cent. of the net wages. If I remember right, it ran 105 per cent. at that time, or some time just prior to that time, and then it got down to 78 per cent., and the last figures that Felt & Tarrant Manufacturing Company made on that proposition was this year, when it came to 72 per cent., so I should say it was about $30,000 worth of special tools which we turned over to the Comptograph Company.

X-Q. 206. Can you state, and if not, can you readily ascertain and then state, so that we may have it in the record at this point, just when the Comptograph Company was organized and the Comptograph business of the Felt & Tarrant Company was turned over?

A. The tools and manufactured machine parts were moved approximately on June 28, 1902. Of course, it took some days to cart the stuff up there, but the men went up, I think, on that day, June 28, 1902. The Comptograph Company was organized May 9, 1902.

X-Q. 207. Who were the officers of the Felt & Tarrant Manufacturing Company at the time of the transfer of its Comptograph business to the Comptograph Company?

A. Mr. C. J. Berard was secretary, Mr. Robert Tarrant was treasurer and I was president.

X-Q. 208. How long had you been the president and Mr. Tarrant the treasurer of the Felt & Tarrant Manufacturing Company?

A. From the date of the incorporation of the Felt & Tarrant Manufacturing Company in 1889.

X-Q. 209. What was Mr. Tarrant's interest or own-

(Second) Deposition of Plaintiff's Witness Dorr E. Felt, stipulated in from Burroughs case.

ership in the Felt & Tarrant Manufacturing Company at the time of the transfer?

A. His ownership was within a dozen shares of fifteen thirty-seconds of all the stock outstanding.

X-Q. 210. And how long had Mr. Tarrant owned substantially or approximately that interest in the Felt & Tarrant Company?

A. Since January 20, 1898.

X-Q. 211. And what was it prior to that date?

A. Just three-eighths of all the stock outstanding.

X-Q. 212. Will you please ascertain, when you look up the other matters inquired about, just how many wide-paper Comptograph machines the Felt & Tarrant Manufacturing Company had actually sold and delivered prior to the sale and transfer of the Comptograph business to the Comptograph Company?

A. I will.

Adjournment taken until tomorrow morning at ten o'clock, March 10, 1908.

Met March 10th at ten o'clock in the morning pursuant to adjournment. Present as before.

X-Q. 213. Mr. Felt, who paid the expenses of applying for and obtaining your patent here in suit, which, I believe, you say amounted to $539.00?

A. The Felt & Tarrant Manufacturing Company.

X-Q. 214. Who paid the expenses of applying for and obtaining your various other letters patent to which you have referred?

A. The same. I might explain that the way these expenses were paid, was by Robert Tarrant's personal check, including the $539 for taking out this particular patent in suit, and the amount was then charged by Robert Tarrant to the Felt & Tarrant Manufacturing Company. All the expenses of the Felt & Tarrant Manufacturing Company were paid in that way, as they had no

(Second) Deposition of Plaintiff's Witness Dorr E. Felt, stipulated in from Burroughs case.

money. I have said that it was Robert Tarrant's personal check. By that I mean, that it was drawn against his personal or business bank account, the same being one, in his business of running a machine shop. This was not all paid at one time.

X-Q. 215. Were the expenses of all of these patents which you took out on adding machines paid in this same way?

A. Yes, during the period from 1889 up to after the application of this patent. I think that such was the case until we paid off the indebtedness to Robert Tarrant.

X-Q. 216. I have here what purports to be a list of the adding machine patents taken out by you, which I will have copied into the record, and ask you whether or not it is a correct list of such patents, and in this list I will underscore or italicize the patent here in suit, in order to locate it in the list and distinguish it from the others. The list is as follows:

(Second) Deposition of Plaintiff's Witness Dorr E. Felt, stipulated in from Burroughs case.

FELT'S ADDING MACHINE PATENTS.

NO. OF PATENT.	DATE OF APPLICATION.	DATE OF ISSUE.
366,945	July 6, 1886,	July 19, 1897
371,496,	March 12, 1887,	October 11, 1897
396,034,	May 31, 1887,	January 8, 1889
405,024,	Jan. 19, 1888,	June 11, 1889
441,232	March 8, 1889,	Nov. 25, 1890
441,233,	Sept. 28, 1889,	Nov. 25, 1890
465,255,	Nov. 11, 1890,	Dec. 15, 1891
568,020,	Sept. 10, 1894,	Sept. 22, 1896
568,021,	June 14, 1895,	Sept. 22, 1896
578,919,	April 3, 1896,	March 16, 1897
590,972,	April 28, 1897,	Oct. 5, 1897
661,121	May 2, 1898,	Nov. 6, 1900
628,176,	May 31, 1898,	July 4, 1899
644,287,	July 13, 1899,	Feb. 27, 1900
671,109,	Oct. 24, 1900,	April 2, 1901
693,958,	Aug. 17, 1899,	Feb. 25, 1902
694,955,	Nov. 19, 1900,	March 11, 1902
711,487,	April 29, 1901,	Oct. 21, 1902
733,379,	Nov. 3, 1902,	July 14, 1903
749,177,	Sept. 12, 1902,	Jan. 12, 1904
762,520,	June 29, 1903,	June 14, 1904
762,521,	Dec. 10, 1903,	June 14, 1904
767,107,	Aug. 3, 1903,	Aug. 9, 1904
780,271,	May 21, 1900,	Jan. 17, 1905
780,272,	March 30, 1901,	Jan. 17, 1905
780,273,	Sept. 17, 1903,	Jan. 17, 1905
853,543,	Dec. 27, 1904,	May 14, 1907

A. Yes, I believe this to be a correct list.

X-Q. 217. Were the inventions covered by all of these patents the property of the Felt & Tarrant Manufacturing Company, and were the patents assigned to that company?

A. All except patent No. 780,271, 780,272, 749,177, 780,-273 and 853,548, I assigned to the Felt & Tarrant Manufacturing Company, after they had been issued to me. These which I have mentioned I assigned to the Comptograph Company. It was assumed all the time that

(Second) Deposition of Plaintiff's Witness Dorr E. Felt, stipulated in from Burroughs case.

they were the property of the Felt & Tarrant Manufacturing Company, I mean all of the adding machine patents.

X-Q. 218. Mr. Felt, who paid the expenses of building "Complainant's Exhibit, Felt 1890 Model"?

A. It was built in Robert Tarrant's shop and by him charged to the Felt & Tarrant Manufacturing Company.

X-Q. 219. Do you remember, and if not, will you please ascertain and state how much the expense of building this 1890 model was?

A. The labor on that machine, that is, the wages amounted to $436.15, for changing over a roll-paper comptograph, one of those we previously made like "Comptograph Company's Exhibit, Roll Paper Comptograph," to make the 1890 model. Of course, that includes some experimenting and there are no overhead expenses included and the original cost of the roll-paper comptograph that had been used up is not included. I should say that to put the total cost, a conservative estimate of a thousand dollars would be right, not including my personal time on it.

X-Q. 220. From what have you obtained the figures as to the cost of this labor on this model?

A. Pages 234 and 287 of Robert Tarrant's time book, which was an exhibit in the case in which this brief was filed by Mr. Rector.

X-Q. 221. Does the time book to which you have referred show the dates at which the first and the last labor was put on this model?

A. It shows the date when the invention first took definite form so that the work could be charged directly to this machine as "Census Comptograph" which is October 12, 1889. The last labor charged on it in the book was February 14, 1890. No more work was done on it of any kind whatever until the automatic alarm bell was

(Second) Deposition of Plaintiff's Witness Dorr E. Felt, stipulated in from Burroughs case.

put on in 1895 or 1896. No work of any kind whatever has been done on it since February 14, 1890, except putting on the alarm bell, and at that time the original machine was not changed in any respect except to cut a slot in one of the paper guides and one of the paper rolls as heretofore testified.

X-Q. 222. How much was the expense of adding this alarm bell device to the model in 1895 or 1896, and who paid it?

A. I have no way of ascertaining the exact expense. The man who put it on tells me that he worked at it about two weeks. Probably some parts were made and furnished him before he began working on it, but all the work charged to "work on comptometers," so that Mr. Tarrant wouldn't know that I was tinkering with this wide-paper machine.

X-Q. 223. What would you say was the probable cost of adding the alarm bell device from what the man you speak of had told you as to the labor put on it?

A. Oh, I should say about $35 or $40. I won't say how much hard study and severe mental labor it took on my part before I conceived of a way of applying an automatic alarm of this kind. I was helped very materially in this respect by having devised the automatic alarm for the ribbon, yet it was no small problem to apply the same idea to operate an alarm automatically by the paper.

X-Q. 224. I quote the following from your testimony in the suit of Comptograph Co. *vs.* Universal Adding Machine Company, in which the brief you have mentioned was filed (Court of Appeals Record, pp. 296, 297) and ask you whether the device there referred to was the alarm bell device which you have just now been discussing:

* * * "Q. 10. Please explain what the metal plate and pins that you referred to as being on the

(Second) Deposition of Plaintiff's Witness Dorr E. Felt, stipulated in from Burroughs case.

right hand end of the paper carriage of the model produced were for, and also the slot that you said had been sawed in the feed roll and paper guide.

A. They are a remnant of an experiment I made in an attempt to provide an alarm bell designed to ring whenever the printing on a sheet of paper approached the lower edge or margin of the paper.''

* * *

A. Yes, but the full answer to the question reads as follows:

''A. They are a remnant of an experiment I made in an attempt to provide an alarm bell designed to ring whenever the printing on a sheet of paper approached the lower edge or margin of the paper. I had a shaft pivoted in the hole, which may now be seen in the angular sheet iron plate and also in a piece that was soldered to one of the uprights of the paper carriage. One end of it extended downward into the slot in the rear paper guide. When there was no paper in, this downwardly extending arm or crank end of the shaft would drop clear through and into the slot cut in the upper paper roll. As soon as a piece of paper was inserted, the crank end or downwardly extending arm of the shaft, the lower end of which was shaped like a sleigh runner, would be forced outwardly, but as the paper passed on through the feed rolls and the lower end of the paper passed beyond the sleigh runner it would drop into the slot in the feed roll. The other end of this shaft, that is, the outer end just above the gears at the right-hand end of the paper carriage, carried a bell. The slight rotation of the shaft, when it dropped into the slot below or was forced out of the slot in the roll by the paper, caused a raising and lowering of this bell and its clapper into and out of engagement with a series of pins on the gear, so that the rotation of the gear caused the bell to ring and thereby notify the operator that he was approaching the bottom of the sheet, and thus prevent running the sheet completely out of the bite of the rolls and destroying the work by printing one or more added numbers on top of one another so that they could not be read. As further along I devised mechanism which, instead

(Second) Deposition of Plaintiff's Witness Dorr E. Felt, stipulated in from Burroughs case.

of ringing a bell, actually locked the machine against further operation, this alarm has not been preserved. I do not know what became of it. I suppose one of the shaft supports which was soldered to the upright of the paper carriage became unsoldered and fell off, and consequently it has become lost."

At the time I testified in that case we hunted everywhere for this alarm bell mechanism, but could not find it. It seems that some years before I had purchased a new desk for myself personally, and given my old desk to George Bollensen, and subsequent to that time when I testified about it, he got a new desk and in cleaning out the old resk which I had formerly used, to transfer his stuff to his new desk, he found this bell in the old desk where I had put it before I gave the desk to him, and brought it to me.

X-Q. 225. What would you say was the cost of the experiment or test which you made shortly before filing your application for the patent here in suit, with the paper return mechanism on the roll paper Comptograph frame which you have heretofore referred to?

A. I don't believe I could give even an approximate estimate of that cost. As I have heretofore indicated, I do not know at the present moment just how much of the experimenting along that line took place before or after the filing of the application.

X-Q. 226. Under what heading or title was the work on the old 1890 model charged in Robert Tarrant's time book to which you have referred?

A. It was charged under the heading "Census Comptograph."

X-Q. 227. Why was it charged under that heading or why was that title selected for the designation of the account?

A. Because I had particularly in view the idea that probably a considerable order for machines like this could

(Second) Deposition of Plaintiff's Witness Dorr E. Felt, stipulated in from Burroughs case.

be obtained from the Census Bureau for tabulating census returns.

X-Q. 228. What, if anything, had you done prior to beginning work on the 1890 model toward ascertaining whether such a machine would be desirable for census work?

A. I believe that in selling Comptometers in Washington I had called at the Census Office and that some of the officials had told me they wanted a machine which would print the work and had shown me tables such as they wanted to produce on the machine. I think that after that I was taken with a severe attack of rheumatism and was in the Presbyterian Hospital here in Chicago for a time and then went down to Hot Springs, Arkansas, and studied this machine up down there, and then came back and made it.

X-Q. 229. I quote the following from your testimony in the suit of Comptograph Company *vs.* Universal Adding Machine Company (Court of Appeals Rec., pp, 295, 296) heretofore referred to, and ask you whether that testimony serves to refresh your recollection concerning the matter inquired about in my last question.

> "(Anwer to Q. 9 continued): In the summer of 1889 I already had some machine which would list and add items, printing the list in a single column on a ribbon or paper feeding off of a roll, and I conceived the idea that for certain classes of work, particularly census tabulation, it would be very desirable to have a machine which would print columns of numbers in parallel vertical columns side by side on a sheet of paper and add them. About that time, or shortly after, I was in Washington and called at the census bureau to see if the idea would be favorably received. I received sufficient confirmation of my original views regarding the matter so that I came back and took one of these roll paper machines and cut it up, and devised suitable mechanism for controlling a wide sheet of paper on which vertical

(Second) Deposition of Plaintiff's Witness Dorr E. Felt, stipulated in from Burroughs case.

columns of numbers could be printed, side by side, and added. In the machine I have before me is the final result of the experiments I made at that time, although, of course, I made some experiments in this connection at that time which did not prove satisfactory, and were discarded, and the mechanism in the present machine, as it now stands, then substituted, with the exception of one piece of sheet metal bent at a right angle and located next to the paper feeding knob at the extreme right-hand end of the paper carriage, and nine pins standing out of the opposite side of a gear which is close to the sheet metal plate just mentioned. There also has been a slot cut in one of the paper guides of the paper carriage at its rear and two slots, one corresponding to the guide slot, in two of the paper feeding rolls. In no other respect has anything been added to this machine as it originally stood in January, 1890, nor has it been modified in any other respect." * * *

A. I cannot say that this answer in the prior case refreshes my memory materially except that it makes it practically sure that I called at the Census Office prior to the making of this machine. I was in Washington at various times during those years selling Comptometers and maybe I called there more than once.

X-Q. 230. You have testified in your direct examination about having taken this 1890 model to Washington in February, 1890, about your failure to interest the census officials in it sufficiently to secure any order for machines like it, and about your then bringing the machine back to Chicago. Can you state just when it was you returned to Chicago with it?

A. I cannot state exactly. I was in Washington that time at least two weeks, I think just about two weeks. I think in the same trip I visited New York and whether it was on the way back or whether I went up to New York from Washington and then back I am not certain. I don't think I was away from Chicago over two weeks, though I might have been away three weeks.

(Second) Deposition of Plaintiff's Witness Dorr E. Felt, stipulated in from Burroughs case.

X-Q. 231. It was, in any event, somewhere about the end of February, 1890, was it not, when you brought the machine back to Chicago?

A. Yes.

X-Q. 232. Now, can you state, Mr. Felt, just what you did with this 1890 model immediately upon your return from Washington about the end of February, 1890?

A. I didn't do anything directly to this model immediately on my return except to unpack it or have it unpacked.

X-Q. 233. Where did you put the model when it was unpacked?

A. I cannot say just where it was put immediately on my return. As I remember, it was around Robert Tarrant's office for some time.

X-Q. 234. Whereabouts, in Robert Tarrant's office, was the model placed at this time?

A. Well, it was in no fixed place, sometimes it would be set on one desk and then it would be in the way and put somewhere else. Sometimes it would be left right where we got through showing it.

X-Q. 235. How long did the model remain around Robert Tarrant's office in this way on various desks and moved about from place to place?

A. Possibly two months and possibly six months. I can't give the exact length of time.

X-Q. 236. What, if anything, different had been done with it by the end of the year 1890?

A. I cannot say as to exact dates, but I know that for a time it was kept on a shelf in a cupboard in the shop where we kept machines that were partly set up, and I also believe machines that were completed. Just when this time began and when it ended, I cannot say, but I think the period was about a year. Maybe it was longer than that. I remember it used to get very dusty when

(Second) Deposition of Plaintiff's Witness Dorr E. Felt, stipulated in from Burroughs case.

it was there, and later when we succeeded in inducing Mr. Tarrant to let us use the drafting room for assembling machines, it was taken in that room and kept there for a while, and then World's Fair year, or just at the conclusion of the World's Fair at Chicago in 1893 we got from Mr. Tarrant a separate room to do the testing in, and it was kept in that room thereafter, part of the time setting on an old safe at the right of the door, and part of the time in a glass case which we used in our exhibit at the World's Fair. I might say that this last room was used as Felt & Tarrant's office when Mr. Tarrant gave us enough room in the shop so that we could do the testing in the room first mentioned and do the assembling outside in the shop.

X-Q. 237. Referring to the early part of your last answer, do you think the model was placed in the cupboard in the Tarrant shop during the year 1890—before the end of that year?

A. I think it very probable, but I will not be sure.

X-Q. 238. Where was this cupboard located in the Tarrant shop?

A. On the third floor, Tarrant's drafting room was in the northwest corner. It was partitioned from the rest of the shop by walls made of matched flooring. The cupboard I refer to was nailed to one of these walls, that being the east wall, and did not extend clear down to the floor. Probably the bottom of it was just about as high as a man's head. The end of it reached the north end of the building. It had about three shelves in it, possibly four, spaced apart just about far enough to receive a Comptograph, that is a roll paper Comptograph after it was set up. It was originally put up to store Comptographs in.

X-Q. 239. This cupboard you speak of was not in the drafting room, was it?

(Second) Deposition of Plaintiff's Witness Dorr E. Felt, stipulated in from Burroughs case.

A. No, it was not. One end of it extended over a work bench, the work being against the wall on the north side of the building.

X-Q. 240. The cupboard, then, as I understand you, was nailed to the outside wall or partition of the drafting room, in the shop, rather than in the drafting room itself?

A. Yes.

X-Q. 241. How large was this cupboard—what were its dimensions?

A. It was about somewhere between seven and ten feet long, and the shelves would be about fifteen to eighteen inches deep. The compartments were probably about fifteen inches deep, that is, in their vertical measurement, and they were as long as the cupboard.

X-Q. 242. What else was in this cupboard during the time the 1890 model was kept in it?

A. I can't remember whether there were any Comptometers in there or not, but I think not. I can't recollect anything else except Comptographs finished, or partly finished.

X-Q. 243. What was the size of the room in which this cupboard was located—the shop room from which the drafting room was partitioned off?

A. At the time it was about 70 by 50 feet. Afterward there was another partition put around part of this room, just east of the drafting room. This partition was made of wood up to about 42 inches high; above that it was wire netting. Possibly this machine was taken out of that cupboard before this other partition was put up. Afterwards, when I got control of that entire floor, I had this other wire netting partition taken down, or part of it. That wire partition enclosed a place just as big as the drafting room, and enclosed the cupboard.

X-Q. 244. What was the large room, in which the cup-

(Second) Deposition of Plaintiff's Witness Dorr E. Felt, stipulated in from Burroughs case.

board was located used for, prior to the putting up of the second partition you have described?

A. It was used partly for the work of Felt & Tarrant's Manufacturing Company and partly for the work of Robert Tarrant in his machine shop business.

X-Q. 245. What was located in the room?

A. Three milling machines, one planer, one or two punch presses, two or three drill presses and probably about a half dozen lathes ranging from watch lathes up to large machine shop lathes. Possibly there was some other machinery in there, as machinery was added from time to time, until this room was enlarged to 70 by 100 feet. There was also some benches in this room at all times. I think in this room some large printing presses were set up during that time, various kinds of large machinery were assembled in that room prior to the time it was enlarged, after which Felt & Tarrant had it exclusively. I am not sure but what Felt & Tarrant had that room exclusively a year or two before it was enlarged.

X-Q. 246. For what purpose was the wire partition which you have described put up?

A. It was put up so that Felt & Tarrant could have to their exclusive use a part of that floor, that being the part enclosed inside the wire partition.

X-Q. 247. You have stated that the space enclosed by the wire partition was about the same size as the drafting room, but I do not believe you have stated the size of the drafting room. Will you please do so?

A. The drafting room was about 25 feet by 15. The part partitioned off by the wire partition was just the same as the drafting room in its longer dimension, and probably wider than the drafting room, possibly twenty feet in its other dimension.

X-Q. 248. And all of these things which you have been

(Second) Deposition of Plaintiff's Witness Dorr E. Felt, stipulated in from Burroughs case.

describing were located on the third floor of Robert Tarrant's building, as I understand you?

A. Yes.

X-Q. 249. How many floors were there in the building, and for what purposes were the other floors used?

By Mr. MUNDAY: Objected to as immaterial.

A. There were four floors and a basement. The top floor was used as a pattern room, and a place to store patterns, that is, wood patterns. The second floor was largely devoted to Robert Tarrant's machine shop, but had his offices also on it. The first floor was devoted entirely to Robert Tarrant's machine shop and the basement was practically unoccupied.

X-Q. 250. Assuming now, that your 1890 model was placed in the cupboard which you have described on the third floor of this building, some time during the year 1890, do you think it remained in that cupboard throughout the year 1891?

A. It did, except when I took it down to show it.

You must understand that when a man took it down, he did not run right back and put it back. It might have stood around in the office for a week or two.

X-Q. 251. Do you recall anything in particular which you did with the model, during this year 1891, or any particular persons to whom you showed it?

A. I do not recall of my own memory at this moment any one in particular that I showed it to. I showed it to numbers of people along those years, but whether it was when it was in that cupboard that I showed it to any particular one I cannot say, except this. The other day Mr. John Nevins told me that when he was a boy down in Kansas, I think Manhattan, Kansas, his sister's father-in-law came down there from Chicago, Mr. F. W. DeBerard was his name, and was chuck full of this machine, and talking about it all the time; that I had showed it to

(Second) Deposition of Plaintiff's Witness Dorr E. Felt, stipulated in from Burroughs case.

him. That was just about the time of the opening of the World's Fair, or shortly prior thereto, and probably while the machine was kept in that cupboard.

X-Q. 252. Do you recall any particular occasion upon which you took the model out of the cupboard during the year 1891?

A. No, I cannot recollect particular occasions. I had no reason to charge my memory with them.

X-Q. 253. Where was the model during the year 1892?

A. I think it was in that cupboard that I have already described, practically all of the time.

X-Q. 54. Do you recall any occasion on which you took it out of the cupboard during that year?

A. I can recall taking it out of the cupboard and cleaning it up to show it during the time it was kept in that cupboard. The thing that impresses me most now is that it was very dirty.

X-Q. 255. But you cannot definitely recall having taken it out of the cupboard at any time during the year 1892, as I understand you. Is that correct?

A. As far as that particular year is concerned I cannot say whether or not the times when I recollect taking it out when it was dirty or some of them fell in that year, but undoubtedly they did.

X-Q. 256. And I suppose it of course follows that you cannot name any persons to whom you showed the model during that year?

A. Not specifically in that year.

X-Q. 257. Where was the model during the year 1893?

A. I think that during all that year it was in that cupboard, but it may have been taken into the assembling room, that is, Tarrant's old drafting room early in that year, and was taken downstairs onto the next floor probably in the last months of that year, or probably the early months of the next year.

(Second) Deposition of Plaintiff's Witness Dorr E. Felt, stipulated in from Burroughs case.

X-Q. 258. Excepting as mentioned in your last answer, do you recall anything in particular which you did with the old model during the year 1893?

A. No.

X-Q. 259. Can you give the name of any person to whom you remember having shown the old model during the year 1893?

A. No.

X-Q. 260. Did you or the Felt & Tarrant Manufacturing Company make any exhibit of your adding machines at the World's Fair in Chicago in 1893?

A. Yes.

X-Q. 261. What sort of an exhibit did you make and what machines did you show?

A. We had, that is, Felt & Tarrant had, an exhibit in the gallery of the Manufacturers' Building department of liberal arts, where they exhibited Comptometers and roll paper Comptographs, keeping one man in attendance all the time. The United States Weather Bureau in their exhibit at the World's Fair borrowed a Comptometer to exhibit in connection with their other instruments, the University of Albany borrowed a Comptometer exhibit as a machine on which they computed some statistics on some of their books or reports, and the department of anthropology and ethnology, Professor Boaz, also borrowed a machine as an exhibit and several other departments borrowed Comptometers as exhibits, but I cannot remember them.

X-Q. 262. Then, as I understand you, your 1890 model was not included in the exhibit which you or the Felt & Tarrant Company made at the World's Fair?

A. It was not.

X-Q. 263. Referring to your answer to X-Q. 257, for what purpose was the old model removed from the cup-

(Second) Deposition of Plaintiff's Witness Dorr E. Felt, stipulated in from Burroughs case.

board in the Tarrant shop to the assembling room or old drafting room some time during the year 1893?

A. Because it was cleaner in there.

X-Q. 264. And for what purpose was it removed from that room and taken downstairs onto the next floor in the latter part of 1893 or early part of 1894?

A. Because it was handier to get at down there.

X-Q. 265. Where was it placed on the floor below when it was taken down there?

A. I can't say just where it was placed when it was first taken down there, but during the time it was down there it was kept part of the time on top of an old safe just to the right of the entrance door, and the rest of the time in a glass case which set on top of a cupboard about as high as a man's shoulder, the other side of the entrance door. The safe was to the right hand side in coming in and the glass case was to the left hand side. At one time there were cupboards in that room large enough to set it in, and it may have been set in those at some time, but the only places I remember it in was on the safe and in the glass case.

X-Q. 266. What was there on this floor below which I understand to have been the second floor of the building, and in what sort of a room was the old model placed when taken down there?

By Mr. MUNDAY: Objected to because the model was not an "old" model at that time. The machine which was called Felt's 1890 model was finished in the early part of 1890, and it could hardly be called an "old" model in 1894. The model is old enough to be very much anterior to any successful wide paper machine made by anybody else, but at that time it was not old by any means.

A. The three rooms of Robert Tarrant's office were there in the northwest corner of the building over the stairway leading to that floor. Coming up the stairway

(Second) Deposition of Plaintiff's Witness Dorr E. Felt, stipulated in from Burroughs case.

and stepping a little to the east and walking a little further, one entered the door of the room I am speaking about. It was a room south of the office of Robert Tarrant, and this room was under the stairway leading to the next floor above.

X-Q. 267. How large was the room and what was there in it?

A. At that time I think that room was about fifteen feet square. Twice after that the room was enlarged to accommodate Felt & Tarrant's needs. About a year ago after the Felt & Tarrant Company moved to the new factory, all the partitions pertaining to that room and other rooms back of it which had been added to it, were torn out. When we first went in there there were in it some of the drawings and property of the old Bullock Printing Press Company. I think there was a desk of theirs and a drawing cupboard of theirs. There was also a safe that they had used, and at that time, or shortly after. there were several more cupboards put into that room for setting Comptometers and Comptographs in, and stationery, etc. I am inclined to believe that one of these larger cupboards was in there originally, but I cannot be sure about that.

Adjournment taken until tomorrow morning, March 11th, at ten A. M.

Met March 11th at ten o'clock in the morning, pursuant to adjournment. Present as before.

X-Q. 268. Was the room you have referred to used for anything else besides the storage of the property of the old Bullet Printing Press Company at the time your 1890 model was put in the room in the latter part of 1893 or early part of 1894?

A. We were testing Comptometers and Comptographs there and I did some drawing in that room. There wasn't anything else there or done there.

(Second) Deposition of Plaintiff's Witness Dorr E. Felt, stipulated in from Burroughs case.

X-Q. 269. Did the model remain in this room throughout the entire year 1894?

A. Practically all the time. At that time I had a desk in one of the rooms of Robert Tarrant's office and I might have had it in there for a few days or a few weeks, and I might have had it upstairs for a few days or a few weeks in the room that I have heretofore referred to as Robert Tarrant's drafting room. As I stated to you before, while I know all the places it was during the time it came back from Washington until the patent was applied for, I cannot say definitely just how long it was in each place. Nevertheless, I am quite positive it was in this room practically all of the time of 1894.

X-Q. 270. Whereabouts, in the room, was the model kept during the greater part of the time during that year?

A. I have already testified as to that, on the safe and in the show case.

X-Q. 271. What do you mean by "show case"?

A. That's the glass show case that we used at the World's Fair.

X-Q. 272. And where was that show case located in the room referred to?

A. To the left on entering the door on top of the cupboard.

X-Q. 273. What was the size of that show case?

A. It was the kind of a show case commonly known as a cigar case. I should say it was about three feet long, eighteen inches from front to back and about sixteen or eighteen inches high.

X-Q. 274. Could the model be readily examined while it was located in this show case on top of the cupboard?

A. No, it could not; it would have to be taken out to be operated.

(Second) Deposition of Plaintiff's Witness Dorr E. Felt, stipulated in from Burroughs case.

X-Q. 275. How high above the floor was the show case?

A. I should say it was about a shoulder high.

X-Q. 276. I believe you have said you think the model was taken out of this room one or more times during the year 1894. Do you remember anything in particular which you did with the model during that year?

A. No, I do not.

X-Q. 277. Can you name any persons to whom you showed the model during that year?

A. I showed it to Mr. Oscar W. Bond during that year.

X-Q. 278. Who was Mr. Bond and what was the occasion of your showing it to him?

A. Mr. Bond was a patent attorney who once did some business for me, and the occasion was one of his calls at the office of Robert Tarrant to attend to some business for Robert Tarrant.

X-Q. 279. Where was the model located, in the room in question, at the time of Mr. Bond's call?

A. I cannot say whether it was on the safe or in the show case.

X-Q. 280. Please state just what you did in showing the model to Mr. Bond.

A. I set the machine either on a desk or drawing board, and printed some figures on it.

X-Q. 281. What inquiries, if any, did Mr. Bond make about the model and what did you say to him?

A. I cannot recollect what I said to him; it would be absurd to suppose that I could. I showed the machines almost daily to different people, hundreds of them in the course of a year, this among others, and what I said and did and what the other man said and did in any particular case I cannot remember.

X-Q. 282. Do you know where Mr. Bond now is?

A. I don't know his office address; he was in this room

(Second) Deposition of Plaintiff's Witness Dorr E. Felt, stipulated in from Burroughs case.

the other day when you and I were both present and that is the last time I have seen him.

By Mr. MUNDAY: Mr. O. W. Bond, referred to, is a well-known patent solicitor who has on office with Messrs. Banning & Banning, in this building—the Marquette Building—on the 16th floor.

X-Q. 283. Where was your 1890 model kept during the year 1895?

A. To the best of my recollection it was kept in this same room practically all the time.

X-Q. 284. Do you remember anything particular which you did with the model during that year?

A. No, unless it was put on the alarm bell or study it up with reference to the alarm bell, but I think that was done the next year.

X-Q. 285. Can you give the name of any person to whom you showed the model at any time during the year 1895?

A. No.

X-Q. 286. Where was the model kept during the year 1896?

A. It was kept in that room most of the time, and I think that year it was most of the time in a cupboard in that room. During that year the bell was put on, if not in the latter part of 1895. When the bell was put on it was taken upstairs to put the bell on, and I had it out myself, first, before the bell was put on it, to get measurements and see how to apply the bell.

X-Q. 287. The bell was applied, as I understand you, either in the latter part of 1895 or the early part of 1896?

A. I would say either in the latter part of 1895 or some time during the year 1896. It was applied either just prior to the application for patent No. 578,919, which application was filed on April 3, 1896, or during the time that the application for patent was pending, the patent having been issued March 16, 1897.

(Second) Deposition of Plaintiff's Witness Dorr E. Felt, stipulated in from Burroughs case.

X-Q. 288. Then, as I understand you, the bell may have been applied to the model late in the year 1896, or even early in the year 1897?

A. In this respect I am testifying after my own memory. I can find out very closely from the man that put it on, Mr. Curt. Zeihm.

X-Q. 289. Is there any record of any kind in existence, as far as you know, which will show definitely and conclusively just when you did put this bell on the 1890 model?

A. There is a record which will show within a few days or weeks.

X-Q. 290. What is that record?

A. It is the record of the foreman of the assembling room—the foreman of the shop, giving the dates on which each machine was taken out by the assembler to be assembled, both comptometers and comptographs.

My personal recollection in regard to the time this bell was put on is fixed by the fact that when I put the alarm bell on the ribbon to give an alarm when it was nearly run off the spool, I saw that the same idea could be applied to give an alarm when the paper being printed on was pretty nearly run out, and immediately, as soon as I could get its application to the paper studied out, I applied it to the 1890 model, so that I would not forget it.

X-Q. 291. Does the record which you have mentioned contain any reference to the alarm bell or to the application of the alarm bell to the 1890 model?

A. It does not, but it shows definitely when it was put on—within a short time.

X-Q. 292. Are you familiar with the deposition which Curt F. Ziehm gave on behalf of the Comptograph Company in the suit of *Universal Adding Machine Company* v. *Comptograph Company,* No. 28,528, pending in this

court, said deposition having been given on or about August 16, 1907?

(Second) Deposition of Plaintiff's Witness Dorr E. Felt, stipulated in from Burroughs case.

A. I cannot say that I am familiar with that deposition, but I do know that he saw this bell lying on my desk just about that time, and he remarked to one of the boys in the office when I was out that he made it and put it on the machine. When I came in I asked him about it and told him to find out when he put it on and come down and see Mr. Munday, and I know that he did so and that he made a deposition in regard to it.

By Mr. MUNDAY: This line of cross-examination is objected to as not being germane to anything in the direct, and for the further reason that the testimony of Mr. Ziehm, itself, is the best evidence of what he testified to, and further because the deposition has not been offered in evidence in this cause by the defendant, and unless it be offered in evidence by the defendant its use here is improper.

X-Q. 293. I quote the following from the testimony of Mr. Ziehm in reference to his application of this bell device to your 1890 model, the testimony quoted appearing on page 157 of the printed record in the case referred to:

"Q. 17. How long did it take you to do this work of putting the device on the machine?

A. It took about two weeks.

Q. 18. Please state what is the date from the book when an interval occurred which was the interval during which this work was done by you.

A. It was done, as near as I can recollect, between February 10, 1897, and April 13, 1897."

Have you any doubt as to the correctness of the date there given by Mr. Ziehm as the date at which the alarm bell device was applied to your 1890 model?

By Mr. MUNDAY: The question is objected to as obviously improper unless the entire deposition is put in evidence.

A. I haven't any doubt in the world but what Mr. Ziehm would tell the truth absolutely. As far as my mem-

(Second) Deposition of Plaintiff's Witness Dorr E. Felt, stipulated in from Burroughs case.

ory in connection with him is concerned, I do not even remember that he was the particular man to put it on, but when he says so I haven't any doubt at all about the correctness of his statement.

By Mr. MUNDAY: The deposition of Curt F. Ziehm, referred to by cross-examiner, is here offered in evidence on the part of the complainant, said deposition being in the following words and figures:

[Said deposition of Ziehm will be found in full at the close of this deposition of Mr. Felt's.]

X-Q. 294. Assuming it to be a fact, from Mr. Ziehm's testimony, that the alarm bell device was applied to your 1890 model in the early part of 1897, can you recall anything in particular which you did do with the model during the year 1896?

A. Assuming that his dates are correct, of which I have no doubt, I undoubtedly had this machine mooning over it from time to time a long time before he put it on. I don't remember anything else that I did with relation to the model in that particular year.

X-Q. 295. Do you remember any one in particular to whom you showed the model during the year 1896?

A. No, I do not remember any one in particular to whom I showed the model in that particular year.

X-Q. 296. Where was your 1890 model kept during the year 1897?

A. I cannot say where it was kept all of that year. I think most of the time it was kept in this same room—that is, the room on the second floor at the back. I think it was kept in that room at least during the latter part of that year, on or near a drawing table at which I worked from time to time. I am inclined to believe that the fore part of that year, or some time during the fore part of that year, it was kept in what was then the testing room, on the third floor, which has heretofore been referred to as Robert Tarrant's old drafting room. In the stock cup-

(Second) Deposition of Plaintiff's Witness Dorr E. Felt, stipulated in from Burroughs case.

board, that is a cupboard in which we kept machines that were finished or being tested.

X-Q. 297. You have stated, I believe, that the model was taken out of the room on the second floor and taken up to the floor above at the time the alarm bell was applied to it. What was done with the model immediately after applying the alarm bell device to it?

A. I think it was then put in the stock cupboard upstairs—that is, on the third floor—but I cannot be sure about that.

X-Q. 298. And how long did it remain there?

A. It remained there until I began getting up the drawings, which I gave, together with this model, to Mr. Curtis when he made the drawings for the patent in suit.

X-Q. 299. Could you say where the model was in July, 1897?

A. Not definitely, no.

X-Q. 300. Could you say where it was in September, 1897?

A. No, I cannot; Mr. Curtis may have had it at that time, but I think it was more likely on or by the drawing table. What I would call study drawing was probably first laid out just about like this 1890 model and then gradually modified in one detail after another by rubbing out and adding here and there until the drawings reached the form in which they were submitted to Mr. Curtis.

X-Q. 301. The Mr. Curtis you refer to was draftsman in your attorney's office?

A. Yes.

X-Q. 302. And when the model was turned over to him it was sent down to your attorney's office?

A. Yes, or possibly I brought it down myself.

X-Q. 303. Is there any record evidence in existence, so far as you are aware, showing when the model was

(Second) Deposition of Plaintiff's Witness Dorr E. Felt, stipulated in from Burroughs case.

brought or sent down to your attorney's office and turned over to Mr. Curtis?

A. Not that I know of.

X-Q. 304. Was the alarm bell device on the model at that time?

A. It was. It may have become unsoldered from the machine before that time. If not, it was on the machine when he had it.

X-Q. 305. And if it had become unsoldered before that time, then where was it at the time the machine was turned over to him?

A. It would be around the drawing board or in my desk.

X-Q. 306. I believe you have stated that this alarm bell device was shown differently located and arranged in your drawings and in the drawings which Mr. Curtis made for the application for the patent in suit, from what it was when on the model, and that is a fact, is it?

A. That is a fact.

X-Q. 307. Can you say positively whether this model was sent down to your attorney's office for Mr. Curtis prior to the 1st day of January, 1898?

A. No, I cannot.

X-Q. 308. Can you say positively whether it was sent there prior to the 1st day of February, 1898?

A. All I can say is that the patent was applied for May 31, 1898, and it was sent down there some time prior to that, probably several months prior to that.

X-Q. 309. How long did the model remain at your attorney's office on this occasion?

A. I cannot say. I would need to get the drawings back as soon as he was through with them, and naturally I would get the model back at the same time.

X-Q. 310. Do you think the model was taken back by

(Second) Deposition of Plaintiff's Witness Dorr E. Felt, stipulated in from Burroughs case.

you or returned to you very soon after the application for your patent was filed?

A. Very likely it was, possibly before.

X-Q. 311. And what was done with it as soon as you got it back from your attorney's office?

A. I don't recollect exactly what was done with it; I think it was put away in the stock cupboard.

X-Q. 312. And how long did it remain there?

A. Maybe a year, maybe two years.

X-Q. 313. At any rate you would say, would you, that it remained there during the balance of the year 1898?

A. Yes, I think that would be right.

X-Q. 314. And probably throughout the year 1899, also?

A. Very likely.

X-Q. 315. Do you recall anything that you did with the model, or any persons you showed it to, during the year 1899?

A. No, I did not.

X-Q. 316. Where was the model during the year 1900?

A. It was either in one of the stock cupboards or in a safety vault.

X-Q. 317. Where was that safety vault and what was the occasion for putting the model in it?

A. The safety vault was the Merchants' Loan and Trust Company's vault. If I recollect correctly, we notified some one of infringement of this patent in suit at that time and was advised to put the model in a safety vault, by our attorneys.

I am perfectly sure of being advised by our attorneys to put the model in a safety vault, but I'm not so sure of having notified some one of infringement at that time.

X-Q. 318. Did the model remain in the cupboard at Mr. Tarrant's shop, where you say it was in 1898 and 1899, after you got back from your attorney's office, until

(Second) Deposition of Plaintiff's Witness Dorr E. Felt, stipulated in from Burroughs case.

it was placed in the safety vault at the Merchants' Loan and Trust Company?

A. Yes.

X-Q. 319. Can you ascertain the exact date at which the model was placed in the safety vault at Merchants' Loan and Trust Company, and, if so, will you please do so?

A. I can and will do so.

X-Q. 320. How long did the model remain in this safety vault at the Merchants' Loan and Trust Company?

A. Until the testimony was taken in the first case in 1904.

X-Q. 321. You refer, do you, to the suit of the Comptograph Company against the Universal Adding Machine Company, which has been heretofore referred to in this testimony?

A. I do. I mean the suit in which you filed a brief.

X-Q. 322. And the model was taken out of the safety vault and introduced in evidence as an exhibit in connection with your testimony in that case?

A. It was.

X-Q. 323. Did you ever, at any time after bringing your 1890 model back from Washington in February, 1890, and prior to the year 1900, endeavor to secure any orders for wide paper adding machines like that model?

A. I did try to get orders to build machines like this 1890 model, after I came back from Washington.

X-Q. 324. When and where did you endeavor to secure such orders?

A. I cannot say exactly when, but my impression is that it was more particularly in 1891, 1892, 1893 or somewhere in there,—possibly even after that.

X-Q. 325. From whom did you endeavor to secure such orders?

(Second) Deposition of Plaintiff's Witness Dorr E. Felt, stipulated in from Burroughs case.

A. I cannot recollect anybody in particular, but I can recollect what I did.

X-Q. 326. And what was that?

A. In a pamphlet advertising the comptometer and roll paper comptograph, there was printed a paragraph very similar to the one in the prospectus in evidence, and I think that there was a reproduction of the work of that machine in that pamphlet, but I have my doubts about it. There was also a small sheet circular pertaining particularly to this machine, which I am sure had a reproduced sample of the work printed in it—yes, I am sure of it. The sheet circular told that we had such a model and would like to get orders to build more like it, but as we had none that we could put on trial we could not get any orders. In those days it was extremely difficult to sell adding machines at all, of any kind, and you had to have machines to put on trial and urge people to take them on trial, and then work with them a long time before you could get them to buy. That is the reason why we did not exhibit this machine at the World's Fair, because we had none to put on trial, and we did not want it to overshadow the machines that we were selling on the market.

X-Q. 327. When did you last see any copies of the pamphlet and circular mentioned in your last answer?

A. About a week or ten days ago.

X-Q. 328. Can you produce copies of them here before closing your examination?

A. I can, and will produce them tomorrow morning, as I found some at my house the other day.

X-Q. 329. I note in a deposition given by you in the case of *Universal Adding Machine Company* v. *Comptograph Company,* No. 28,528, pending in this court, and heretofore referred to in this examination, the following question and answer, appearing on page 145 of the printed record:

(Second) Deposition of Plaintiff's Witness Dorr E. Felt, stipulated in from Burroughs case.

"X-Q. 84. During the period between 1890 and 1898, did you make any attempt to secure a market for machines similar to the 1890 model in evidence other than your visit to the Census Bureau?

A. I did not."

What did you mean by that answer?

A. In the first place, I do not consider the printing of the pamphlet and the circular as what could be called an attempt to secure a market for wide paper machines, and the pamphlet and circular had passed out of my mind until one night about ten days ago, when I got to searching through a drawer containing a lot of old printed matter of the Felt & Tarrant Manufacturing Company, to see if I could find another copy of the prospectus.

X-Q. 330. Did you, between the application for your patent in May, 1898, 1890 and 1900, make any effort to secure orders or create a market for wide paper carriage adding machines like your 1890 model, other than by issuing the pamphlet and circular to which you have referred?

A. I did not do anything which would in the naturel sense of the words "create a market," amount to a real endeavor to create a market during that time, unless it was the attempt to get an order from the Census Bureau, which, if procured, would have been of such a size and importance as to be of tremendous value as an advertising proposition and an argument to enlist capital and encourage Mr. Tarrant. A few of the pamphlets which I just referred to were mailed, with the object of obtaining orders for comptometers and comptographs, and the paragraph referred to, inserted in that pamphlet, about the wide paper machine, was put in in the hopes that some one would inquire about it, but as no one ever did none of the circulars were mailed. I have no doubt that some of the times when I showed this 1890 model I did so with the hope that the one I showed it to would evince

(Second) Deposition of Plaintiff's Witness Dorr E. Felt, stipulated in from Burroughs case.

sufficient interest in it so that I could afford to turn from an attempt to sell the roll-paper comptograph or comptometer and make an effort to get an order to make a wide paper machine; but not having any wide paper machines to put on trial, I could not afford to bring it forward prominently in that connection, and perhaps thereby spoil my chance of selling either a roll-paper comptograph or a comptometer.

X-Q. 331. If you had received any orders for machines like your 1890 model, in response to the pamphlets which you sent out or otherwise, would you have built and supplied the machines?

A. I cannot say what I actually would have done, except that I would have tried to get Mr. Tarrant's consent to do so. If I had got an order to build one, that might have been a more or less persuasive argument to use with him.

X-Q. 332. When was it that the pamphlet and circular, to which you have referred, were issued?

By Mr. MUNDAY: Objected to because it does not appear that the pamphlet or circular was ever issued, but merely that the pamphlet and circular were printed and the pamphlet issued.

A. I cannot say within two or three years now; I may be able to say tomorrow morning, after I see the pamphlet. I probably will be able to say because there are testimonials in it that are dated.

X-Q. 333. You have stated that none of the circulars were mailed. What was done with them?

A. They were kept for some time among the stock of printed matter, and I don't know what finally became of them; they doubtless got burned up among other stuff at some annual clean-up, when taking inventory.

X-Q. 334. Do you remember how many of those circulars were printed?

(Second) Deposition of Plaintiff's Witness Dorr E. Felt, stipulated in from Burroughs case.

A. I do not; maybe a hundred, maybe five hundred.

X-Q. 335. And how many of the pamphlets?

A. Probably about a thousand. In those early days we sent out a great many pamphlets and circulars advertising the comptometer—that is, a great many for those times. At the time the pamphlet was printed, a whole lot of pamphlets advertising the comptometer were printed—maybe 5,000—and then the same type had more type and matter added to it pertaining to the roll-paper comptograph, and a few hundred pamphlets struck off, including the matter about the comptograph, and also the paragraph referring to this 1890 model. I will also bring down one of the comptometer pamphlets referred to.

Thereupon the further taking of testimony in this cause was adjourned until Thursday, March 12, 1908, at 10 o'clock A. M.

THURSDAY, March 12, 1908, 10 A. M.

Parties met pursuant to adjournment. Present, as before.

Thereupon cross-examination of the witness was resumed, as follows:

X-Q. 336. Have you with you this morning copies of the pamphlet and circular which you mentioned yesterday?

A. I have and here produce them.

By Mr. MUNDAY: The pamphlet produced by the witness is here offered in evidence on behalf of the Comptograph Company, complainant, the pamphlet being marked "Complainant's Exhibit Felt & Tarrant Pamphlet." And the circular produced is here offered in evidence, to be marked "Felt & Tarrant Circular."

X-Q. 337. Can you now state when this pamphlet and this circular were printed?

A. Yes, I can; I can tell from reference to the testimonials in the pamphlet. One on the last page is from

(Second) Deposition of Plaintiff's Witness Dorr E. Felt, stipulated in from Burroughs case.

R. W. Wood, Cashier Bank of Tombstone, Arizona, and reads as follows:

> "We have used your comptometer for about six months and feel now that we could not dispense with it."

The Bank of Tombstone bought that comptometer October 5, 1891, so it must have been printed after that date. On page 29 there is a photogravure reproduction of a letter from the "Central Office of the Meteorological Bureau, Cornell University." At the bottom of that page there is no note, as there is on pages 22, 21, 19, 31, etc., stating that they purchased the second comptometer since the testimonial was written. If they had done so, such a note would have been printed on that page as in the other instances. The Meteorological Bureau at Cornell University, just referred to, purchased their second comptometer February 22, 1892, so it must have been printed before February 22, 1892,—that is, it must have been printed after October 5, 1891, and before February 22, 1892.

The circular is referred to in the pamphlet, therefore it must have been printed before or at the same time that the pamphlet was, probably at the same time, because at the top of the third page of the circular it refers to printing the answer automatically, and the picture of the roll-paper comptgraph, printed in the pamphlet, shows the knob at the left-hand corner which is used for automatic answer printing. And the 1890 model did not have the automatic answer printing; the first wide paper machine to have the automatic answer printing on it was No. 1800, also specially referred to in this deposition.

X-Q. 338. Upon what page of the pamphlet is the reference to the wide paper carriage of the tabulating machine to be found?

A. On page 18.

(Second) Deposition of Plaintiff's Witness Dorr E. Felt, stipulated in from Burroughs case.

X-Q. 339. When next, after publishing or printing this pamphlet and this circular, about the end of the year 1891, did you or the Felt & Tarrant Company publish or print any further pamphlets, circulars or advertising matter of any kind relating to the wide paper carriage comptograph?

A. We did not publish anything at all—that is, we did not print anything at all—pertaining to the wide paper comptograph, until about the time we put it on the market in 1900.

X-Q. 340. Referring to Q. and A. 65 on your direct examination, when did you first hear of the Hiett adding machine or the Hiett patent? I refer to the Hiett patent No. 580,863, applied for September 16, 1896, and issued April 20, 1897.

A. I saw the patent shortly after it was issued. I never saw a Hiett adding machine. I never heard of a Hiett adding machine being in existence, unless the patent would be called an adding machine, which it really is not, because it does not represent anything which will add accurately. I procured the patent by sending for it, after seeing it listed among all those issued from the United States Patent Office bearing the same date as the Hiett patent in the Scientific American, published in New York City.

X-Q. 341. Were you in the habit, at that time, of obtaining copies of all patents that were issued on adding machines?

A. I was in the habit of looking in the alphabetical list of patents published in the Scientific American for those entitled "Adding Machines" or "Calculating Machines" and sending for them.

X-Q. 342. How long had that been your practice and how long did it continue?

A. That had been my practice for some years prior to

(Second) Deposition of Plaintiff's Witness Dorr E. Felt, stipulated in from Burroughs case.

that—I guess it would be proper to say many years prior to that—and has continued up to now, except that I now look for machines listed under some other names, like "Computing Machines," etc.

X-Q. 343. Do you recall how soon it was, after the issue of the Hiett patent, that you obtained a copy of it?

A. In the natural course it would be about two weeks.

X-Q. 344. And you have no reason to doubt, I suppose, that in the present instance you did receive a copy of the patent within that time?

A. I have no reason to doubt but what I received a copy of the patent soon after; it might have been a little over two weeks; I don't know exactly how soon after the date of issue the patent gets into the list in the Scientific American, and I don't know whether the list itself is published weekly or monthly.

X-Q. 345. What did you do with the copy of the Hiett patent when you received it?

A. I read it and put it in a letter file—I don't know as it is proper for me to say I read it, I only glanced over it.

X-Q. 346. Are you familiar with the Pike patent, No. 595,864, applied for July 9, 1897, and issued December 21, 1897, a copy of which is in evidence in this case?

By Mr. MUNDAY: Objected to as not germane to the direct examination of this witness.

A. I have seen the patent a number of times.

X-Q. 347. Do you recall when it was that you first saw this patent?

A. Yes.

X-Q. 348. When was it?

A. It was when it was cited as a reference to the application for the patent in suit.

X-Q. 349. Then you did not obtain a copy of this Pike

(Second) Deposition of Plaintiff's Witness Dorr E. Felt, stipulated in from Burroughs case.

patent about the time it was issued, as you have said was your habit of doing in regard to adding machine patents?

A. No, I did not. This patent is entitled "Printing Attachment for Calculating Machine," so I did not notice it in the Scientific American list. It was, I suppose, arranged alphabetically under "P."

X-Q. 350. Have you ever seen any adding machines which appeared to be constructed under and in accordance with this Pike patent?

A. Yes, I have.

X-Q. 351. Do you recall when it was that you first saw any such machines?

A. I cannot recall any place in particular until one came into the possession of the Comptograph Company, when, for the first time, I had a good chance to examine it. I had seen them before that, casually, through bank windows.

X-Q. 352. Had you ever seen one of these Pike machines prior to filing your application for the patent in suit, on May 31, 1898?

A. No, not till long after that.

X-Q. 353. Had you, prior to that date, ever heard of the existence of such machines?

A. No.

X-Q. 354. Did you never, at any time prior to the filing of your application on May 31, 1898, hear that the American Arithmometer Company, of St. Louis, Missouri, was making a wide paper carriage adding machine and exhibiting samples of such machine and endeavoring to secure orders for them?

A. I do not recollect of ever hearing of a wide paper machine, except the 1890 model, being made or offered for sale or exhibited in any connection prior to that date.

X-Q. 355. Are you willing to swear positively that you

(Second) Deposition of Plaintiff's Witness Dorr E. Felt, stipulated in from Burroughs case.

did not, at any time during the year 1897, hear of any of the matters inquired about in my last question?

A. It's pretty hard to be positive about the time so far back as that, but if I did hear of anything of the kind it made no impression, and I feel quite positive that I never did.

X-Q. 356. And are you equally certain and positive that at no time during the year 1898, prior to filing your application on May 31st of that year, had you heard anything about wide paper carriage adding machines being made and exhibited or offered for sale by the American Arithmometer Company of St. Louis?

A. With reference to 1898, I would make the same answer that I did with reference to 1897 in the previous questions.

X-Q. 357. During the year 1897 and the first half of the year 1898, who was the principal salesman for the Felt & Tarrant Manufacturing Company, engaged in selling its comptometers and comptographs?

A. A. J. DeBerard, of New York City.

X-Q. 358. To what extent did you personally participate in the sale and efforts to sell comptometers and comptographs at that time?

A. I had charge of the entire business and exercised a supervision over both the selling and the manufacturing.

X-Q. 359. How much of your time did you devote to the selling end of the business?

A. It's pretty hard to say. I was so busy with inventions, manufacture and selling altogether, that it is pretty hard to say how much time I devoted to each.

X-Q. 360. Give us an idea.

A. Probably two or three hours a day.

X-Q. 361. Did you personally solicit orders for and sell any comptometers and comptographs during the years 1897 and 1898?

(Second) Deposition of Plaintiff's Witness Dorr E. Felt, stipulated in from Burroughs case.

A. I looked after two of our old customers, one was Albert Dickinson & Co. and the other was Marshall Field & Co., and I think that's all.

X-Q. 362. Who looked after the sales of your Company's machines in Chicago during those two years?

A. Charles Bittrolff.

X-Q. 353. How long did he continue to be selling agent of your Company in Chicago?

A. He was selling for the Felt & Tarrant Manufacturing Company in Chicago until about a year ago.

X-Q. 364. How closely were you in touch with Mr. Bittrolff while he was selling your Company's machines in Chicago in 1897 and 1898?

A. I used to see him occasionally when he came over to the factory to get machines or to report sales to the bookkeeper.

X-Q. 365. If any wide paper carriage adding machines were sold and put into use in Chicago during the year 1897, do you think you would have known about it at that time?

A. Not unless we came in contact with them in direct competition with machines on trial.

X-Q. 366. If any wide paper carriage adding machines had been sold elsewhere in the country, during the year 1897 and the first half of the year 1898, in competition with your Company's comptometers or comptographs, do you think you would have heard of the fact at that time?

A. If it came in direct competition with the comptograph I think I would have been very likely to have heard of it.

X-Q. 367. Who was the selling agent for your Company's comptometers and comptographs in the City of St. Louis during the years 1897 and 1898?

A. I don't think we had a selling agent in St. Louis in those years either for the comptograph or the comp-

(Second) Deposition of Plaintiff's Witness Dorr E. Felt, stipulated in from Burroughs case.

tometer. I don't think we ever had a selling agent for the comptograph in St. Louis.

X-Q. 368. Who solicited the orders for such comptometers and comptographs as were sold in St. Louis in those years?

A. I do not think any soliciting, except by sending out circulars, was done in St. Louis during those years. I solicited some sales personally in St. Louis along about 1889 or '90, and then for two or three years Mr. Verdier—I can't think of his initials—solicited some sales personally in St. Louis, where he resided. Then for a long time we didn't have anybody there, receiving from St. Louis only repeat orders and such orders as we could get by inducing people to take comptometers on trial by mail.

X-Q. 369. Who looked after sales of your Company's machines in Washington, D. C., during the years 1897 and 1898?

A. We never had an agent in Washington, D. C. After about 1890 I believe all our orders in Washington were secured by mail or consisted of repeat orders. I do not recollect of anybody having done any soliciting in Washington except what I did at a very early time until within the last two or three years.

By Mr. Rector: I offer in evidence a copy of the Hiett patent No. 580,863, and ask that it be marked "Defendant's Exhibit Hiett Patent."

Thereupon the further taking of testimony in this cause was adjourned until Friday, March 13, 1908, at 10 o'clock A. M.

Friday, March 13, 1908, 10 A. M.

Parties met pursuant to adjournment. Present, as before.

Thereupon the further cross-examination of the witness was resumed, as follows:

X-Q. 370. Have you ascertained when it was that your

(Second) Deposition of Plaintiff's Witness Dorr E. Felt, stipulated in from Burroughs case.

1890 model was deposited in the safety vault at the Merchants' Loan & Trust Company?

A. Yes, it was March 7, 1902, and the occasion was, as I supposed, because I find that on January 10, 1902, we notified both the Mallman Addograph Company of Sheboygan, Wisconsin, and the Universal Accountant Machine Company of St. Louis, Missouri, of their infringement of this patent in suit. We had already notified the American Arithmometer Company, whom the Burroughs Adding Company succeeded, of their infringement of this patent, on October 18, 1900.

X-Q. 371. And the 1890 model remained in that safety vault, did it not, from March 7, 1902, until after the first suit was brought against the Universal Adding Machine Company in 1904?

A. Yes, although it was taken out for a few days or weeks just prior to filing the bill in that suit.

X-Q. 372. What was done with it when it was taken out on that occasion? How soon was it returned to the safety vault?

A. It was taken over to the office of Munday, Evarts & Adcock, and I think it was returned shortly thereafter.

X-Q. 373. Referring to X-Q. and A. 188, have you ascertained how often and when machine No. 1800 was returned to the Felt & Tarrant Company and the Comptograph Company, and just what was done to it, during the period from December 21, 1900, to and including January 27, 1908?

A. I have ascertained up to the time the business was taken over by the Comptograph Company in 1902, in June, but did not have time to go over to the Comptograph Company when I got through looking up all the things I was sent after at the Felt & Tarrant Manufacturing Company's factory. And I find that this machine was to the factory for repairs on the following

(Second) Deposition of Plaintiff's Witness Dorr E. Felt, stipulated in from Burroughs case.

dates: October 3, 1901; December 4, 1901; January 3, 1902. Those are the only dates it was to the factory for repairs. There was nothing done to it except to repair it. If any change has been made in the paper return mechanism or the alarm bell mechanism, as I suggested there might have been the other day, that change would have been made very shortly—that is, within a few weeks or two or three months after it was sold—but it was not repaired or returned to the factory until October of the next year after it was sold; therefore I know that the machine has not been changed since it was originally sold to the Illinois Brick Company in 1900.

X-Q. 374. You are satisfied, are you, that no change of any kind has been made in the machine since Felt & Tarrant's comptograph business was turned over to the company?

A. Yes, I am.

X-Q. 375. Have you ascertain whether machine No. 1810 was returned to the factory for repairs or alterations at any time after it was sold, in March, 1901?

A. Yes, and I find that machine 1810 was not returned to the factory for repairs or repaired at any time or in any other way during the one year and three months that it was in use in the offices of H. J. Heinze & Co., of Pittsburgh, Pa. This record comes up to the time that the business was taken over by the Comptograph Company.

X-Q. 376. And how about machine 1900?

A. This machine was sold to the American Steel & Wire Company January 8, 1901; was repaired only once during the period that elapsed before and up to the time the business was taken over by the Comptograph Company in June, 1902, and this repair was made on April 24, 1902.

X-Q. 377. Referring to X-Q. and A. 212, have you

(Second) Deposition of Plaintiff's Witness Dorr E. Felt, stipulated in from Burroughs case.

ascertained how many wide-paper comptograph machines the Felt & Tarrant Manufacturing Company had actually sold and delivered prior to the sale and transfer of its comptograph business to the Comptograph Company?

A. It had sold 20 wide paper comptographs up to that time; of course they were all delivered, because they were all on trial several months before the bill was made.

X-Q. 378. Referring to X-Q. and A. 140, have you been able to find the old paper return mechanism there inquired about, or any remnants of your experiment or test with that mechanism?

A. No, I was not able to find anything.

X-Q. 379. What was the selling price of the roll-paper comptograph manufactured and sold by the Felt & Tarrant Company from 1889 to 1900?

A. At first it was $250. I find the price originally printed on page 12 of the pamphlet offered in evidence yesterday as "Complainant's Exhibit Felt & Tarrant Pamphlet" $250; as that pamphlet was undoubtedly printed in 1892, it was certainly $250 up to that time, and I think it was the same price for some years after that. Eventually the price was changed to $350, and a rubber stamp was used to blot out the old price and stamp in the new price of $350. This pamphlet has no price of the tabulator in it—that is, the wide paper machine—but has on the first page prices of the comptometer. These comptometer prices and the $350 comptograph price—that is, roll-paper comptograph price—continued up to the time when the comptograph business was taken over by the Comptograph Company.

X-Q. 380. Referring to X-Q. and A. 178, where you gave the number of *different kinds* of manufacturing operations in making the parts of the comptometer, the

(Second) Deposition of Plaintiff's Witness Dorr E. Felt, stipulated in from Burroughs case.

roll-paper comptograph and the wide-paper comptograph, I believe you said, off the record, that you could also, by doing some figuring, state the actual number of manufacturing operations (as distinguished from the number of different kinds of operations) in making the parts for these several machines. I should like to have you do that, if you please, and give the numbers upon the record before your deposition is closed, but will not ask to have it suspended for that purpose now.

By Mr. Rector: Defendant's counsel produces and submits to complainant's counsel what purports to be a copy of the "Brief for Appellee" filed on behalf of the Comptograph Company in the United States Circuit Court of Appeals in the suit of the *Comptograph Co.* v. *The Universal Adding Machine Co.*, in which the brief of Mr. Rector, which has been referred to, was filed, and states that he desires to offer such brief in evidence, to accompany the other two briefs in the same case which are already in evidence on behalf of the complainant.

By Mr. Munday: The printed brief produced is authentic and is one that was filed in court.

But the introduction of the brief is objected to as being immaterial and improper and irrelevant to any issue in this cause.

By Mr. Rector: Defendant's counsel offers in evidence the brief produced and requests that it be marked "Defendant's Exhibit Comptograph Brief."

Re-direct Examination.

By Mr. Munday:

R-D-Q. 381. Please explain fully why the 1890 machine was not exhibited at the World's Fair in 1893.

A. As I have already stated to Mr. Rector on cross-examination, this 1890 model was not exhibited at the World's Fair in Chicago in 1893 because we were there to get orders for machines, such as we had in stock and could therefore put on trial; as we had no machines we

(Second) Deposition of Plaintiff's Witness Dorr E. Felt, stipulated in from Burroughs case.

could let any one have on trial, like the 1890 model, we couldn't afford to exhibit it, as it would overshadow what we had on the market and we couldn't get orders of any kind then.

R-D-Q. 382. I wish, in this connection, you would explain fully the method of sale of adding machines. Just explain what is and has been the custom among manufacturers with regard to selling these machines.

A. With the exception of "repeat" orders—by repeat orders I mean orders coming from persons or firms who have already purchased one or more adding machines—the custom is to get people to take the machines on trial. This is done in different ways, sometimes by personal solicitation and sometimes by sending out circular letters offering to send machines on trial; at the same time, trying to impress upon the prospective customer the fact that the machine must be in use by him until he or his clerk has become skilled in manipulating the keys so as to realize the advantage of it, before deciding whether or not to purchase it. In early times—say up till about 1900—we used to tell them that this would take two months, but usually had to extend that period from time to time as each case seemed to require, until they could begin to realize the value of the machine to them; sometimes it took six months and sometimes a year. The result of this condition of affairs was that to do any considerable business in adding machines one required a considerable stock of adding machines to put on trial and the size of the business that could be done was limited primarily by the number of machines one could afford to carry for trial purposes. The first of January, 1908, the Felt & Tarrant Manufacturing Company were carrying a stock for such purposes of upwards of 2,800 machines, and had in the stockroom parts for upwards of 4,000 machines. The necessity for a large stock

(Second) Deposition of Plaintiff's Witness Dorr E. Felt, stipulated in from Burroughs case.

of parts is due to the fact that to make them economically, each time any particular part is made, it is necessary to make a large number of them at one run after rigging up the special tools to perform the various operations of their manufacture.

R. D. Q. 383. Outside of "repeat" orders, what proportion of adding machines are sold without being put on trial for a considerable period of time?

A. Not over 1 per cent. of the total of all sales of all kinds. In any adding machine business I have ever been connected with. Sometimes a clerk will go from one office to another to work and a straight order, without a trial, result, and I have even known of a few very rare instances where a man ordered a machine without any trial just through an advertisement.

R. D. Q. 384. I believe you stated that when you came to build a second wide paper machine, after the 1890 machine, that you made use of the 1890 machine as a guide in the making of the drawings for the new machine. Please explain just what you did in that respect.

A. I used the 1890 model constantly for reference, together with a roll-paper machine such as we were making at that time, and the frame with the paper return experiment in it, when making the drawings used by Mr. Curtis, together with the 1890 model, when he made the patent drawings for patent No. 628,176, which is the patent in suit. Those drawings, as far as they went, were just like the drawings of the patent in suit, but were not sufficient in themselves to make the drawings for that patent, the 1890 model, in that connection, being the principal guide. The 1890 model didn't have the automatic answer printing and did not have the automatic paper return; and the bell alarm in the 1890 model, or sheet end warning, having to be modified somewhat to adapt it to the structure of

(Second) Deposition of Plaintiff's Witness Dorr E. Felt, stipulated in from Burroughs case.

the machines we were then turning out, which were the result of gradual evolution since the 1890 model was made.

Of course it will be seen from the patent that the bell alarm and the automatic paper return are not in any way connected with claims 1, 2 and 4 of this suit. The parts that are connected with these claims consist of, among other things, a paper carriage, with devices in it for automatically feeding the paper in any position of the carriage, with respect to the movement or position of the carriage, with reference to the printing mechanism (and do not include the automatic paper return or the alarm bell), and of course Mr. Curtis would get his guide in reference to all such things from examination and operation of the 1890 model. To illustrate, it will be noticed that the 1890 model had a laterally moving paper carriage between the type and the hammers, the feed rolls of which grasp the paper and when rotated feed it up. One end of those rolls is geared to a long spline shaft. That shaft passes through a ratchet wheel, so mounted in the frame of the machine that the ratchet wheel rotates automatically a tooth at a time whenever the main operating lever of the machine is manipulated. This long spline shaft will be seen at the back end of the machine; the ratchet wheel will also be seen at the right-hand back end of the machine, the spline shaft passing through it. The spline shaft travels with the carriage while the ratchet wheel stays stationary in the frame of the machine in which it is mounted. That spline shaft is numbered in the drawings of the patent in suit as C^4, the ratchet wheel is numbered C^3, and their relation to one another and to the other parts of the machine is just the same in the patent as in the 1890 model. The same is true in regard to the roll and the paper carriage in its relation to the other parts of the machine. An examination of the parts pertaining to the cross-feed or lateral feeding of the paper

(Second) Deposition of Plaintiff's Witness Dorr E. Felt, stipulated in from Burroughs case.

carriage, both in the machines and in the patent, will disclose a similar identity in respect to both. This is true not only in regard to this patent but in regard to every patent of mine on a wide paper machine right through up to the present date, and it is also true of the machines being manufactured by the Comptograph Company today. None of the features pertaining to those claims have been changed through all this time, except in mere details of structure; no change has been made in respect to the different parts pertaining thereto in their relation to one another or in relation to the rest of the machine; all remain just as they were in the 1890 model and act functionally in the same manner in all these patents and in the machines made today just as they did in the 1890 model.

Now in the next patent, No. 644,287, where we still have all these parts pertaining in any way to the claims involved in this suit, just as they were in the 1890 model,—the parts only being modified in form or structure to facilitate manufacture and to adapt them to the paper locking, the return mechanism and the over-hanging hammer frame, which has not anything to do with the claims of this patent. Now this second patent, No. 644,287, applied for July 13, 1899, contains drawings made directly from machine No. 1800 before the mechanism for sheet end warning was used to operate a trigger to lock the machine instead of to swing a bell into a zone of a vibrating clapper. One other change has been made in that machine since the drawings for this patent were made, and that is that the spline shaft, heretofore referred to in this answer, which in this patent is number B^8, was since changed from a round shaft with a spline in it to a square shaft because it is cheaper and easier to make a square shaft sliding through a square hole, in the process of manufacturing duplicate parts in quantities, than it is to

(Second) Deposition of Plaintiff's Witness Dorr E. Felt, stipulated in from Burroughs case.

make a spline shaft and put a feather in the ratchet hub, as in the 1890 model and in both of these patents—that is, the patent in suit, and this patent No. 644,687. In making the drawings used in constructing machine of patent 644,287, both the 1890 model and the drawings which were submitted to Mr. Curtis were constantly referred to as the machine 1800 was gradually built up, the drawings being in pencil and changed from day to day, as in building up the machine improvements in the detail of arrangement and construction of parts pertaining to every part of the machine were made, not only what pertains to these claims but what pertains to the general mechanism of the machine, to the alarm mechanism and to the paper return mechanism were constructed. As a matter of fact, there were no complete drawings except the drawings of the patent in suit, until there was a complete machine, that being machine No. 1800, and what drawings there were—were merely drawings of detail. Both the drawings and the machine 1800 were both made while constantly referring to the 1890 model.

R. D. Q. 385. I wish you would state, in answer to this question, what mechanisms of the 1890 machine are still employed in the comptograph of today. I do not mean to ask you merely what exact details of construction, such as the unimportant difference between a square shaft and a spline shaft to slide through a ratchet, but I wish you would point out in the model the various parts, and the various combinations and arrangements of parts, in that machine, that are used in the comptograph of today. If it will be convenient, you may refer to the patent in suit and give the lettering of the parts in that drawing.

A. There are the cross-bars, A and A^1, connected together at their ends by the heads A^3, constituting the frame of the carriage, the paper-rolls being mounted therein. These paper-rolls are rotated by gears on their

(Second) Deposition of Plaintiff's Witness Dorr E. Felt, stipulated in from Burroughs case.

ends, numbered in the patent C^{10} and C^{7}, which in turn are rotated by the gear C^{5} on the end of the spline shaft C^{4}, which passes through the ratchet C^{3}, this ratchet in turn being actuated by a pawl C, which in turn is mounted on and is carried through its actuating movement by the crescent-shaped connecting-rod 29, which connecting-rod moves back and forth every time the main operating lever of the machine is manipulated, thus feeding the paper in its line-spacing movement. Every one of these members that I have mentioned, by reference to their designating number or letter in the patent, are found in the 1890 model, and in the machines made today by the Comptograph Company, except that a bell-crank has been interposed between the pawl and the connecting-rod, and that in the patent there is an intermediate gear C^{6} that is not found in the model and is not found in machine 1800 or in any of the other patents. This gear C^{6} just mentioned and the bell-crank interposed between the connecting rod and the pawl have nothing to do with the function of the machine in any way, serving merely to transmit motion, and the same kind of motion in the same way in all cases, being merely matters pertaining to convenience of structure.

To insure uniform line spacing, both of the model and in all these patents, there is a spring brake designated in the patent in suit as H^{1}, bearing on a ratchet designated in the patent as D^{11}, the end of the brake dropping between the teeth of the ratchet serving to steady and make the line-spacing uniform. In the 1890 model and in all the patents and in the machines manufactured by the Comptograph Company up to this day this brake and ratchet is found, the only difference being that in the 1890 model the spring brake does not terminate in a friction roller, while in all the wide paper machines made by Felt & Tarrant and the Comptograph Company, the

(Second) Deposition of Plaintiff's Witness Dorr E. Felt, stipulated in from Burroughs case.

spring brake terminates, where it engages the ratch, in a friction roll. This is merely a matter of difference of detail, either form serving the same purpose in the same way and with practically the same efficiency. In the patent in suit, the cross-feeding of the paper carriage is effected by means of a bell-crank and pawl, the bell-crank in the patent being numbered E^7 and the pawl E^6. This pawl engages with notches in one of the cross-bars, numbered A in the patent, to feed the paper carriage sidewise whenever a hand-lever E in the patent is operated, this hand-lever E being connected to the bell-crank by a crescent-shaped connection and hand-lever of the patent are all in the 1890 model and they are in every machine manufactured by the Comptograph Company and by the Felt & Tarrant Mfg. Co. and they are in every patent on wide paper machines taken out by me. The only differences in any of them consist in the fact that the hand-lever E is moved to the right hand side of the machine instead of the left hand side of the machine in the patent in suit, while it is on the left hand side of the machine in the 1890 model, this being a difference which is not essential in any respect to the construction or operation of the machine or its parts but is merely for the convenience of the operator; and the further difference that in the second patent, and all the machines manufactured even up to this date, the bell-crank, the pawl and the connection were all moved to the right hand side of the machine, which is a difference that has nothing to do with function or operation but merely with convenience and economy of structure. In short, in the model and all the patents, and in all the machines manufactured even to this day, all these parts are found in each and every one of them—patents, machines and the model,—functioning just the same and operating just the same and for the same purpose throughout. There is a difference

(Second) Deposition of Plaintiff's Witness Dorr E. Felt, stipulated in from Burroughs case.

I forgot to mention: the notches in the cross-bar in the model are closer together than they are in the patent and in the machines manufactured, so that the paper carriage moves farther when the hand-lever is operated in the machines manufactured and in the patent than it does in the 1890 model.

The relation of the paper carriage to the rest of the machine—that is, the types and the ribbon and the printing hammers, etc., etc.—are the same in the 1890 model, in all the patents, and in all the machines manufactured.

As directed in the question, I have not referred to mere difference of a round bar instead of a square bar like the part A in the patent, where it is square as it was in all the manufactured machines and in all the patents, though these bars were round in the 1890 model. I haven't mentioned the further difference that in the patents, and in all the manufactured machines, these bars A were placed one back of the other instead of one over the other as in the 1890 model, this pertaining solely and only to a matter of convenience in structure and having nothing whatever to do with function or operation in any way; and I will repeat again that any differences there are between the model, the patents and the manufactured machines, so far as anything pertaining to the claims in suit is concerned, are merely differences of structure, and not of operation or function.

I will make drawings of this 1890 model, on which I will number all the parts having anything to do with these claims the same as they are numbered in the patent in suit.

Thereupon the further taking of testimony in this cause was adjourned until Saturday, March 14, 1908, at 1:30 P. M.

(Second) Deposition of Plaintiff's Witness Dorr E. Felt, stipulated in from Burroughs case.

SATURDAY, March 14, 1908, 1:30 P. M.

Parties met pursuant to adjournment. Present as before.

Thereupon the witness continued his answer to R-D-Q. 385 as follows:

The hand lever pawl, connecting rod and bell crank for the purpose of feeding the paper carriage sidewise, that is laterally, are not all there is to this feeding mechanism, to which the claims of the patent pertain. In the 1890 model and in machines 1800, 1900 and 1810, frequently referred to heretofore in this deposition, as well as in the machines manufactured by Felt & Tarrant Mfg. Co., is contained a device for preventing overthrow in this feeding movement of the paper carriage. That device in the model consists of a lever, the end of which engages in notches in the cross-bar A to prevent the carriage going too far. In the patent in suit this lever is dispensed with, the overthrow being taken care of by the end of the pawl E^6 wedging in between the frame of the machine and the notch in the cross-bar with which it co-acts so as to absolutely prevent overthrow of the paper carriage in the sidewise movement and insure uniform sidewise spacing in the feed of the paper carriage, as explained in line 120 to 124, page 2 of the patent specifications. But in the next patent, No. 644,287, which shows the structure of machines 1800, etc., this lever, which is in the 1890 model, for preventing overthrow of the paper carriage, is shown just as it was constructed and put in the machines manufactured, and lettered E. In this respect, the machines actually manufactured were more like the 1890 model than is the patent in suit, the same as in other respects,—as, for instance, the fact that in the 1890 model there are only two paper feeding rolls, the same as there were in all the machines manufactured,

(Second) Deposition of Plaintiff's Witness Dorr E. Felt, stipulated in from Burroughs case.

from No. 1800 up to the present day. For instance, it will be seen that the paper guide numbered 35 in the patent in suit is hinged to the frame of the machine, and in the operation of the machine swings back and forth. It is not so in the 1890 model, nor is it so in the later machines manufactured by the Felt & Tarrant Mfg. Co. or by the Comptograph Company, in which this part was constructed without the hinge feature but like the 1890 model and as shown in patent 694,955, wherein it is not numbered but is shown in Fig. 6 right between the figures 22 and 22, like the 1890 model. Through all these patents, in the 1890 model, and in the machines manufactured to-day we find the hammers for striking the figures to impress them on the paper, the pawls for detaining the hammers or cocking them, the means for lifting the hammers in the cocked position, the type-heads, and everything else pertaining to these claims in all respects the same and bearing the same relation to one another and working in the same way—in short, as I said in answer to a previous question, all the parts having anything to do with the claims 1, 2 and 4 are all just the same in the 1890 model, in the manufactured machines, and in all the patents, functioning the same and constructed the same.

R-D-Q. 386. When you came to apply for this patent on the wide frame machine or tabulator, did you include in the application the best mode in which you had contemplated applying the principle of that invention, or did you withhold anything?

A. Yes, I did put it in the very best form then known to me; I included in it the 1890 machine and added to it every improvement that I had made since, and it represented a great deal of study, as to the best form to give it, both prior to the making of the 1890 machine and during all the years thereafter until the patent was applied

(Second) Deposition of Plaintiff's Witness Dorr E. Felt, stipulated in from Burroughs case.

for, and although I did, after the patent was applied for, go back in some cases and adopt the form shown in the 1890 model, rather than the form shown in the patent in regard to some details, this was because I had concluded that the original form was the best.

R-D-Q. 387. Referring to the 1890 model, which one of your patents, if any, is it that shows the construction and operation of the key-board and the adding mechanism?

A. Patent No. 441,233, applied for Sept. 28, 1889, and issued Nov. 25, 1890.

R-D-Q. 388. Was that the most perfect form of key-board and adding mechanism that you were familiar with at the time you made that 1890 machine?

A. Yes, it was the kind we were then manufacturing and selling as our roll-paper comptograph.

R-D-Q. 389. Now, when you came to manufacture the tabulator, what form of key-board and adding mechanism did you apply to it?

A. The same as that shown in patent No. 661,121, applied for May 2, 1898, which application was filed practically simultaneously with the patent in suit, the latter being filed May 31st of the same year. The patent No. 661,121 was granted November 6, 1900.

R-D-Q. 390. When you put this key-board and adding mechanism into the tabulator, did you know of any better form of key-board and adding mechanism that you could apply?

A. I did not.

The WITNESS: I have here the figures asked for yesterday by Mr. Rector in X-Q. 380, as follows:

Comptometer, 5,521 operations; roll-paper comptograph, 10,559 operations; tabulator, 12,519 operations.

R-D-Q. 391. Did you at any time have photographs made of this machine called the 1890, and, if so, when

(Second) Deposition of Plaintiff's Witness Dorr E. Felt, stipulated in from Burroughs case.

was that done, and, if more than once, give the time as near as you can.

A. Yes, I did. The time was shortly after I returned from Washington—that is, from the Census Office in 1890.

R-D-Q. 392. Why did you take these photographs and what did you use them for, if anything?

A. Originally I took them to have to send to people to show what it looked like, as I had no cut of it.

R-D-Q. 393. How many copies or prints did you have made?

A. I don't remember—three or four, possibly six.

R-D-Q. 394. What became of those photographs?

A. I gave all but one out, or mailed them out—I don't remember just how they were given out—people that I thought might be interested in the machine, and when the application for the patent in suit was pending I sent the remaining one to the United States Patent Office at Washington, D. C.

R-D-Q. 395. Are you able now to state when it was that you showed this machine, Felt's 1890 model, to some particular person in a particular year, and, if so, please say so and give the time as near as you can and how you fix the date.

A. I cannot off-hand right now, except Mr. Bond, but I can ascertain some particular time by going to the offices of Felt & Tarrant and looking up the matter.

R-D-Q. 396. What particular persons have you in mind to whom you showed the invention?

A. One man is J. N. Faithorn; I can fix the time I showed it to him. Another man was the representative of Timothy Eaton & Company, Toronto, Canada, who called at the office of Felt & Tarrant somewhere about 1895 or '96, and shortly thereafter bought a roll-paper Comptograph.

(Second) Deposition of Plaintiff's Witness Dorr E. Felt, stipulated in from Burroughs case.

R-D-Q. 397. I notice that you often speak of the 1890 census machine as a "model." Why is this?

A. Because it was tagged "Felt's 1890 Model" in a prior suit against the Universal Adding Machine Comuany. Prior to that we always called it the "tabulator," although it was entered in Robert Tarrant's time-book as "Census Machine" by Mr. DeBerard. At the factory it was always known as the "tabulator," as all wide-paper Comptographs were known. They were called "tabulators" in the pamphlets about the wide-paper machines when they were first got out, and they are so called on all shop schedules to which I have been referring to get the figures asked for by Mr. Rector.

R-D-Q. 398. The machine is, however, in one sense a model, is it not; that is to say, it is the first one built, made largely by hand, and used as a guide or pattern?

A. Yes, a full-sized working model.

R-D-Q. 399. It is a model in the same sense, and no other sense, that the full-sized machine No. 1800, of which you have spoken, is a model, and which you subsequently sold to the Illinois Brick Company.

A. That is true.

R-D-Q. 400. Did you sell the model machine No. 1800 to the Illinois Brick Company before or after you had built others or another from it?

A. Afterward.

Thereupon the further taking of testimony in this cause was adjourned until Monday, March 23, 1908, at 10 o'clock A. M.

Met pursuant to adjournment on March 23rd and further adjournment taken until March 26th, 1908, at 10 o'clock A. M. Present as before.

Re-direct Examination Continued.

R-D-Q. 401. On the cross-examination you were asked

(Second) Deposition of Plaintiff's Witness Dorr E. Felt, stipulated in from Burroughs case.

concerning the Pike patent No. 595,864. Do you know who owns this patent?

A. I understand it is owned by the Burroughs Adding Machine Company of Detroit, the defendant in this case.

R-D-Q. 402. I wish you would compare the printing attachment shown in this Pike patent with the mechanism of the 1890 machine and state what fundamental differences there are between the two.

A. There are a number of differences, but I will point out the principal ones, pertaining to the printing and of the machine. In the Pike patent the paper printed on is supported against the blow which makes the impression by a platen or support and which consists in the drawings of the member lettered F, which is a roller about which the paper is wrapped. In the 1890 model, no support of this kind for the paper is employed, the rolls not being used therein in any manner for the purpose of making the printed impression. In the 1890 model, the impression is made by compressing the paper directly between the type and the hammers, which always remain stationary with respect to lateral movement with reference to the type. In the Pike patent, the paper support or platen moves laterally with the carriage. Another difference is that the hammers which strike the blow to make the impression deliver the blow on the non-printing end of the type and cause the type to move toward the paper instead of the blow being delivered from the back of the paper.

Another difference is that in the Pike patent the columns can be printed only in a certain number of fixed distances apart, in which position the carriage is locked against lateral movement at the will of the operator without first swinging the carriage back away from the machine, away from its co-acting relation with the type.

(Second) Deposition of Plaintiff's Witness Dorr E. Felt, stipulated in from Burroughs case.

In the 1890 machine and all wide-paper Comptographs ever made, the carriage is always free to be moved by the operator in position to print parallel vertical columns at varying distances apart on the paper, to suit the requirements of varying forms of stationery or to enable the operator to print a larger number of columns on the same sheet. All of the peculiarities mentioned by me, in answer to this question, are in all the Comptographs manufactured.

R-D-Q. 403. What advantage, if any, is there in the principle and method of producing the impressions as described by you as being the method employed in the 1890 machine and in the tabulator Comptograph, as compared with the method described in the Pike patent?

A. One of the advantages that results from these differences, viz.: the ability to print a greater number of columns when the items involved are small ones, so as to get more work on the same sheet of paper, is obvious. Another advantage aimed at in making the impression on the paper after it has passed some distance away from the feeding rolls is the obtaining of what is called visible printing—that is, having the item printed immediately displayed in front of the operator, just as soon as it has been printed. Another advantage, and which results from hitting the paper from the back instead of driving the type against it, is that it simplifies the mechanism very greatly, permitting the use of a type-head to which the type are firmly attached, having no independent movement with reference thereto, thus eliminating, in the case of the type-head, five independently moving parts as well as five springs.

R-D-Q. 404. This Pike patent is referred to by Mr. Rector in his brief, "Complainant's Exhibit Rector's Brief," on page 12 and again on page 45. On page 12 Mr. Rector says:

(Second) Deposition of Plaintiff's Witness Dorr E. Felt, stipulated in from Burroughs case.

"Pike's patent claimed the invention here in controversy just as broadly as did Felt's application * * *"

and in a foot-note on the same page he says:

"For instance, claim 1 of the Pike patent, as follows:

'1. The combination of two or more type arranged to print side by side, a support for a sheet of paper to be printed adapted to be set in different positions opposite the printing type, and means for moving the paper longitudinally on its support whereby parallel longitudinal columns may be printed upon the paper, substantially as described.'"

And on page 45 he says, after quoting some authorities, and to show the application of the same:

"In the case at bar, another *had* 'made the invention and secured by patent the exclusive right' to it while complainant's patentee was negligently delaying making application for patent, if, indeed, he had not entirely abandoned the invention."

Now, Mr. Felt, is it true that the claim above quoted would cover the 1890 Felt machine or the modern tabulator Comptograph, or is it not true?

By Mr. Rector: The question is objected to as irrelevant and immaterial to any issue in the present cause, and not germane to the cross-examination of the witness, and as calling for an expression of opinion or a conclusion on the part of the witness upon a question of law.

A. It is not true. The claim quoted in the question would not cover the 1890 model or any Comptograph subsequently manufactured.

R-D-Q. 405. If you can do so, please point out any requirement or element or feature or features of construction mentioned in the foregoing claim not found in the 1890 Felt machine or the tabulator Comptographs subsequently manufactured.

By Mr. Rector: Objected to as irrelevant and immaterial and not germane to the cross-examination of the witness.

(Second) Deposition of Plaintiff's Witness Dorr E. Felt, stipulated in from Burroughs case

A. The claim specifies "a support for a sheet of paper to be printed adapted to be set in different positions opposite the printing type." In the patent the support here referred to can be nothing else than the roller F, which is referred to in the specification, page 3, lines 23 to 26, as follows:

> "a platen or support for a sheet of paper, means for supporting the said platen so that it can be set in different positions opposite the type,"

In the 1890 model, or any of the subsequently made Comptographs, there is no "platen or support" of this kind, which in one that provides a support to the paper against the impressing impulse of the hammers. The Comptograph has no platen nor does, in the Comptograph, either one of the opposing impressing devices have any movement into different positions with relation to one another, the type being one and the hammers the other of these opposing impressing devices.

R-D-Q. 406. In the machine of the Pike patent, the roller that forms the platen or support for the sheet of paper, and that bears the thrusts of the type, is made movable across the machine and carries the paper with it into different positions in respect to the printing type. In other words, it is "adapted to be set in different positions opposite the printing type," so that the printing may be done in columns. Is that right?

A. Yes, and acting in each of these positions as one of the opposing members in impressing or printing operations.

R-D-Q. 407. In your machine—the 1890 machine—and the subsequent Comptograph tabulators, the opposing devices between the paper is pressed in the act of printing are the type on the one side of the paper and the hammers on the other side, and these hammers are not "adapted to be set in different positions opposite the printing type"; is that right?

(Second) Deposition of Plaintiff's Witness Dorr E. Felt, stipulated in from Burroughs case.

A. That is correct.

R-D-Q. 408. You have had some days to think about these old matters, and to refresh your recollection respecting what you did with the 1890 Felt machine in the various years between 1890 and 1898. Are you able to add anything to what you have already said?

A. Yes.

R-D-Q. 409. Please give such further information as you are now able to give respecting this matter.

A. About a year after Arthur J. DeBerard went to New York to take our agency there, I sent this 1890 model down to New York for him to look at. That would be about in the winter of 1894-5, as he went down there at the conclusion of the World's Fair in Chicago in '93. As I recollect it, he wanted to show it to a man in a savings bank in Providence. I believe it was the Provident Institute for Savings.

The machine was gone on this trip a month or two and then came back. I have an indistinct recollection of making some slight alterations in the machine just before I sent it, but I cannot remember just what it was; it seems to me that I did something to the hinged paper guide, to facilitate getting the paper in, but I wouldn' be sure of that.

R-D-Q. 410. Do you remember of any other instances where you sent the machine away from your factory?

A. No.

R-D-Q. 411. Are you able now to fix the time when you first had any dealings with T. Eaton & Co. with respect to the tabulator Comptograph or 1890 machine? If so, please relate what you are able to say about it.

A. In March, 1894, Mr. Roger B. McMullen, who at that time had a factory for making wire netting, at the corner of Ontario and Market streets, now Orleans street, Chicago, called at Robert Tarrant's on Illinois street, at the request of Timothy Eaton & Co., of Toronto, and I showed

(Second) Deposition of Plaintiff's Witness Dorr E. Felt, stipulated in from Burroughs case.

him this 1890 machine and then wrote T. Eaton & Co. about it. Some time between that and January 24, 1906, probably just prior to the latter date, on which T. Eaton & Co. bought a roll-paper Comptograph, a representative of T. Eaton & Co. from Toronto called at our place on Illinois street and I showed him the tabulator; I do not remember his name.

R-D-Q. 412. Have you a copy of the letter that you wrote to T. Eaton & Co. in respect to the tabulator?

A. I have and here produce it.

By Mr. MUNDAY: The letter produced by the witness is here offered in evidence on behalf of the Comptograph Company, and is in the following words and figures:

"Mar. 20, 1894.

"*Mr. E. Y. Eaton,*
c/o B. Eaton & Co.,
Toronto, Ont.

DEAR SIR: We have had the pleasure of several calls from Mr. Roger B. McMullen, and at his request we write you in regard to the Comptometer and Comptograph.

The printed prices of these machines are strictly net to residents of the United States. For export into Canada we allow a discount of 30%, or if preferred we will deliver them duty paid at *list* price.

Mr. McMullen inquired especially as to a machine for filling out the sheets on which you list and add the purchase checks. We can make such a machine for $750.00. Our 'Comptograph Tabulating machine,' circular of which is enclosed, exactly fills the bill in every particular.

Our regular Comptograph would do the work on strips, two columns on each strip. The strips could be pasted together to make a sheet.

We see no occasion for listing them except that when working the old way they cannot be added until listed, but with a machine they can be added direct from the purchase checks, therefore when a machine is used there is no occasion for listing them at all. When a bunch of checks are added the total can be written on a piece of paper and filed with the

(Second) Deposition of Plaintiff's Witness Dorr E. Felt, stipulated in from Burroughs case.

checks. If in the future for any reason you have to check up any part of the work, the additions can again be made direct from the checks and thus get at it at once, for in this manner you avoid the chance of making a mistake in writing the list.

On account of this, the writer would recommend the use of our Comptometer for this work. The Comptometer does no printing at all, only indicating the footings. If at any time within a year you desire to change it for a Comptograph and can arrange about the duty, so that it will not have to be paid twice we will take the Comptometer back in part payment for a Comptograph or Tabulating machine, as you may desire, allowing you for the Comptometer all that you pay us for it.

The only advantages that the Comptometer has over the printing machine is that there is no paper or ink ribbon to look after and no spacing lever to strike between each check. For instance, in adding 10¢, $1.40, 20¢ on the Comptometer, you would simply have to strike four keys, while with the Comptograph you would have to strike four keys and a spring spacing lever three times. In using any of these machines, no keys have to be struck for the ciphers and the printing machine *automatically fills in the ciphers*. All the machines are perfect in all respects and possess every convenience that could be desired, and are exceeding durable and convenient to manipulate. The type can be brushed clean in 20 seconds. They are instantly canceled. They are light and well finished.

It is not to be supposed that any one can pick them up and in five minutes with them do work rapidly, but after one has used them a few weeks they can do the work from twice to five times as rapidly as it can be done in any other way. If you should buy one of them you would not be disappointed.

Yours very truly,

FELT & TARRANT MFG CO.
D. E. FELT.

P. S. You will notice that the Comptograph fills in ciphers to the *left* as well as to the right of the *answer*. For your work it will have to be fixed so that it will not print any ciphers to the left. That is an easy thing to do.''

(Second) Deposition of Plaintiff's Witness Dorr E. Felt, stipulated in from Burroughs case.

R-D-Q. 413. Have you any other letters of similar purport written by you concerning the tabulator or 1890 machine?

A. Yes, I have a copy of a letter to Mr. C. F. Dean, of the Union National Bank, Pittsburgh, Pennsylvania, dated April 8, 1893, and I here produce it. I notice in the letter to Eaton & Co., and also in this letter, that I did find use for two of these circulars about the Comptograph tabulator—or at least one circular about the Comptograph tabulator—and it is a satisfaction to know that the printing of them was not entirely wasted. I here produce the letter to Mr. Dean.

By Mr. MUNDAY: The letter produced by the witness is offered in evidence and in the following words and figures:

"Apr. 8, 1893.

"*Mr. C. F. Dean,*
Union National Bank,
Pittsburgh, Pa.

DEAR SIR: Mr. J. M. Russel of your city requests us to send a circular of our tabulating machine and we enclose one herewith.

We have not pushed this machine any; but have made one complete which works to a perfection in all respects. We are going on the principle of introducing one thing at a time, and the Comptometer, having an unlimited field, we introduce that first. The *fac simile* of tabulating machine work is not nearly as good as we can do now since we have learned how to make a Comptograph of any kind print in good alignment.

Should you order one of these machines we can assure you that it will fully meet your expectations and be made in the very best style of art, and we will guarantee it for three years just the same as we do all of our manufactures.

Awaiting your favor, we are,

Yours very truly,

FELT & TARRANT MFG. CO.

D. E. FELT."

(Second) Deposition of Plaintiff's Witness Dorr E. Felt, stipulated in from Burroughs case.

R-D-Q. 414. Whereabouts is Mr. Arthur J. DeBerard at the present time?

A. His office is 350 Broadway, New York City.

R-D-Q. 415. Can you now state when you showed the 1890 machine to Mr. J. N. Faithorn?

A. It was about August, 1895. His brother was doing some printing for us, and at the time Mr. Faithorn was an officer of Street's Stable Car Company and a man that had had a great deal to do with the accounting of railroads, and he was over to Tarrant's shop one day and I showed him this 1890 model.

R-D-Q. 416. I hand you a letter taken from the files of our office. State whether you recognize it and what it is.

A. It's a letter dictated and signed by myself, dated January 29, 1898. This letter was written after the 1890 model and the roll paper Comptograph, together with the drawings heretofore referred to, had been left at your office for the purpose of having application for patent No. 661,121 and 628,176, the latter being the patent in suit, prepared. The matters referred to in this letter all pertain to the application for patent No. 661,121, except one line, which reads:

> "This goes in the patent not showing the tabulator."

This line was put in so that in writing the specifications the attorney would not get the matters referred to in the letter mixed up in the application for the tabulator patent, which is the patent in suit, and which was being prepared at the same time.

By Mr. MUNDAY: The letter referred to the witness is here offered in evidence and is in words and figures as follows:

(Second) Deposition of Plaintiff's Witness Dorr E. Felt, stipulated in from Burroughs case.

"Jan. 29, 1898.

"*Mess. Munday, Evarts & Adcock,*
Room 906, #204 *Dearborn St.,*
City.

GENTLEMEN: By bearer I send a lot of Comptograph parts. Some of the details which I desire to patent are as follows:

Key Stops—to guard against sticking.

Answer lever—to push worm cam back to place.

Interlocking device.

Big carrying pawl and its connections.

Touch off for carrying in canceling.

Hammer touch off flipper.

Noise stopper.

New hammer.

New ratchet and co-acting dolly roll on big rubber roll together with relation of paper feed pawl to new ratchet, which leaves the roll free to be turned either way.

Spring lever acting against big cam.

New canceling lock.

New brake.

You may notice others which I have overlooked.

This goes in the patent not showing the Tabulator.

Changes which are hardly patentable, being merely matters of construction, are:

Type-heads.

Big hinge, or paper guide.

Carrying parts.

Hammer touch off which carries the three-corner rod.

Slotted connection for hammer touch off carrying finger bar.

And similar detail changes throughout.

These construction changes I desire to have shown in the drawings, though not going to any particular trouble to illustrate them.

Yours very truly,

D. E. FELT."

R-D-Q. 417. How long before this letter was written was it that you began to prepare the drawings to which you have referred; and how long before this letter was written did you take the drawings and the model over to our office, to Mr. Curtis?

(Second) Deposition of Plaintiff's Witness Dorr E. Felt, stipulated in from Burroughs case.

A. I was several months preparing the drawings, possibly six months, certainly not less than four months, as I could only work at it in spare moments. How long it was before the letter was written that the model and drawings were brought down to Mr. Curtis I have no means of knowing, but in the usual course it would be several weeks, or maybe months, before he would get at it. It would be perfectly fair to state that I started to work on the drawings at least six months before the letter was written.

Thereupon the further taking of testimony in this cause was adjourned until Friday, March 27, 1908, at 10 o'clock A. M.

Met Friday, March 27, 1908, pursuant to adjournment, and adjourned until Tuesday, March 31, 1908, at 10 o'clock.

Tuesday, March 31, 1908, 10 A. M.

Met pursuant to adjournment. Present as before.

And thereupon the re-direct examination of the witness, Mr. Felt, was resumed, as follows:

R-D-Q. 419. In answer to R-D-Q. 409, you mentioned having sent the 1890 machine down to New York to your agent Charles J. DeBerard. And you fixed the date of that shipment of the machine as being in the winter of 1894-5, by reference to the World's Fair. Have you since then been able to find any record directly connected with the shipment, and which will enable you to fix the date more accurately? If so, please produce it.

A. Yes, I have found the original entry of the shipment on page 2322 of the shipping book. It was shipped November 7, 1894, and returned November 22, 1894. I here produce the shipping book containing the record.

R-D-Q. 419. In whose handwriting is this entry on page 2322?

A. It is in my handwriting; the entry was made by myself.

(Second) Deposition of Plaintiff's Witness Dorr E. Felt, stipulated in from Burroughs case.

By Mr. MUNDAY: The shipping book referred to is here offered in evidence on behalf of the Comptograph Company, the same to be marked "Comptograph Company's Exhibit Felt & Tarrant's Shipping Book of 1894."

The entry on page 2322, referred to by the witness, is in the following words and figures, the italicized portion being written matter in the original:

"2322 CHICAGO, *Nov. 7, 1894.*
Shipped to
A. J. De Berard,
54 Franklin St.,
New York.
Tabulating machine
Compto——— No. ——— Cols. *8.*
For *exhibition* days' trial.
Charged ———
Returned *Nov. 22, 94.*
Account of ———"

R-D-Q. 420. You said you would have some drawings made of the 1890 machine, and on which drawings you would mark with numbers all the parts having to do with the claims of your patent No. 628,176. Have you done this?

A. I have and here produce the drawings, the same being five sheets.

By Mr. MUNDAY: A photo lithographic copy of the drawings produced by witness is here offered in evidence on behalf of the Comptograph Company, the same being marked "Drawings of the 1890 Machine."

R-D-Q. 421. Please state what method you have pursued in numbering or lettering the various parts of these drawings.

A. With the exception of one or two instances, where the designating numbers or letters used by me on the drawings are taken from other patents, in each of which cases the other patent is also designated on the drawing, the numbers or characters which I have used are the

(Second) Deposition of Plaintiff's Witness Dorr E. Felt, stipulated in from Burroughs case.

same numbers or characters used for corresponding parts in the drawings of the patent in suit, No. 628,176. I have not numbered all the details, but the principal parts having functions.

Re-cross-Examination by Mr. Rector.

R-X-Q. 422. Do you know what Mr. DeBerard did with your 1890 model when you sent it to him at New York in November, 1894?

A. I was under the impression that it was sent down there for him to show to somebody connected with the Provident Institute for Savings, Providence, Rhode Island; but when I come to look at the entry of the shipment, and see that it left here on November 7th and arrived back fifteen days later, on November 22nd, I am uncertain as to whether or not he showed it to the bank people.

R-X-Q. 423. At whose request or suggestion was the 1890 model sent to Mr. DeBerard at New York?

A. It was at his request.

R-X-Q. 424. Was that request made in some letter from Mr. DeBerard to you or your company?

A. It was probably made in some letter, but I cannot be sure about that; he may have been out here.

R-X-Q. 425. Has the correspondence which you and your company may have had with Mr. DeBerard at that period been preserved?

A. Very likely it has.

R-X-Q. 426. Will you please ascertain, Mr. Felt, whether you can find any correspondence had by you or your company with Mr. DeBerard with reference to your sending your 1890 model to him in New York in November, 1894, and produce it?

A. I will do so.

R-X-Q. 427. Do you remember where the 1890 model

(Second) Deposition of Plaintiff's Witness Dorr E. Felt, stipulated in from Burroughs case.

was located at Felt & Tarrant's factory at the time Mr. DeBerard requested you to send it to New York.

A. It was in the back room on the second floor, the room that we took just after the World's Fair, the old Bullock Office.

R-X-Q. 428. In your letter of March 20, 1894, to Eaton & Co. at Toronto, you refer to a circular of your Comptograph tabulating machine as being inclosed with the letter. Was that circular one of the circulars of which you have produced a sample here, and which has been offered in evidence by complainant and marked "Felt & Tarrant Circular"?

A. I believe it was.

R-X-Q. 429. In your letter of April 8, 1893, to Mr. C. F. Dean, Union National Bank, Pittsburgh, you also refer to an inclosed circular of your tabulating machine. Was that also one of these same circulars?

A. Yes, I think it was.

R-X-Q. 430. Do you remember any one else besides Eaton & Co. and the Bank of Pittsburgh to whom you sent any of these circulars?

A. I do not.

R-X-Q. 431. Have you made any examination or search in your or your company's correspondence to find any other instances in which you sent out such circulars with letters which you were writing?

A. I looked to see what I had written to Eaton & Co., as I remembered them, and I also looked to see what I had written to J. M. Russell, agent at Pittsburgh, and found the letter to Eaton & Co. and a letter to Russell, mentioning the bank in Pittsburgh, with which Mr. Dean is connected, and from that got the letter to Dean.

R-X-Q. 432. Was Mr. Russell your agent at Pittsburgh at that time?

A. Yes.

R-X-Q. 433. Your letter to Mr. Dean states that Mr.

(Second) Deposition of Plaintiff's Witness Dorr E. Felt, stipulated in from Burroughs case.

Russell had requested you to send Mr. Dean one of your circulars about the tabulating machine. How did Mr. Russell communicate that request to you?

A. By letter.

R-X-Q. 434. Was it the reply to that letter which you say you recently found in looking up correspondence with Mr. Russell?

A. Yes.

R-X-Q. 435. Have you here with you the copy of your letter to Mr. Russell which you say you found?

A. I have not, but I can get a copy.

R-X-Q. 436. Will you please do so and also produce, if you can find it, Mr. Russell's letter to you requesting you to send the circular to Mr. Dean?

A. I will do so.

R-X-Q. 437. It is possible, is it not, that you sent out a considerable number of the circulars, such as those sent to Eaton & Co. and Dean, in addition to the two sent to those parties?

A. It is not.

R-X-Q. 438. Would you undertake to say that those two were the only two instances in which you sent out such circulars?

A. They are the only instances I can recollect, wherein the correspondence would occasion the use of those circulars, and my recollection is pretty clear in regard to this wide paper machine, so I think that it would be perfectly correct to say that those were the only instances when any were sent out.

R-X-Q. 439. What did you do with the supply of pamphlets like "Complainant's Exhibit Felt & Tarrant Pamphlet" in which these circulars were referred to?

A. At first we sent out a few of them right after they were printed, generally, possibly 100, possibly 400; then after that, for some years, not being able to make enough roll paper Comptographs, and being in better shape to

(Second) Deposition of Plaintiff's Witness Dorr E. Felt, stipulated in from Burroughs case.

push the Comptometer in the way of manufacturing it, we didn't use any more of those pamphlets except on special inquiry, but used, for general circular work, the pamphlet which was like this one except that it omitted all reference to the Comptograph or printing machines of any kind, making numerous reprints of the pamphlet, which was restricted to the Comptometer only, sending out tens of thousands of them, accompanied by a letter offering to send the Comptometer on trial. During that time the pamphlet which contained the paragraph about the tabulating machine was not used at all except on special inquiry.

R-X-Q. 440. To whom did you send the pamphlets that were sent out?

A. To some banks in the larger cities, that is, the pamphlet containing the paragraph about the tabulating machine. The other pamphlet, which was restricted to the Comptometer, was sent out to all lines of business.

R-X-Q. 441. I notice that the exhibit pamphlet contains cuts or illustrations of both the Comptometer and the roll paper Comptograph. Did you ever print any pamphlet or circulars or other advertising matter containing any cuts or illustrations of your 1890 model?

A. No. As a matter of fact, if we had gotten an order for a wide paper machine we would have made one embodying the answer printing, therefore we had nothing from which we could make a cut showing exactly the machine we would supply or make in compliance with the order.

R-X-Q. 442. Referring to R-D-Q. 381, what did you exhibit at the World's Fair in the glass case in which you subsequently stored your 1890 model at Felt & Tarrant's factory?

A. During the daytime we had one or two roll paper Comptographs and a 10 or 12 column Comptometer sitting in it, and at night we locked all of the machines in

(Second) Deposition of Plaintiff's Witness Dorr E. Felt stipulated in from Burroughs case.

it, including those used by the demonstrator during the day.

R-X-Q. 443. Referring to that part of your answer to R-D-Q. 385 in which you point out the fact that in your 1890 model the notches in the cross-bar of the paper carriage are closer together than in the machine of your patent in suit, will you please state how far apart the notches are in the 1890 model?

A. They are one-eighth of an inch apart.

R-X-Q. 444. So that at each operation of the spacing lever in the 1890 model the paper carriage is moved one step, an eighth of an inch long, toward the left; is that correct?

A. Yes, and in the patent the notches are farther apart and the pawl-carrying levers and connections are so proportioned that the pawl engaging the notches travels a greater distance, thus throwing the carriage a much greater distance at each operation of the operating lever for side motion of the carriage. All the members of the 1890 model being the same as they are in the patent except that they are so proportioned as to give the pawl a greater travel and the notches in the bar of the carriage are farther apart. In the patent not a single element or member has been added to the mechanism to change the side feed of the carriage, the difference consisting simply in giving different proportions to the members so as to give the pawl a greater movement and thus move the carriage a greater distance at each operation of the lever.

R-X-Q. 445. How far apart are the type in the 1890 model, that is, how far apart sidewise from center to center?

A. The battery of 8 type show an intentional variation in spacing between the different columns. The first three type heads are about an eighth of an inch apart. Between the third type and the fourth type and between

(Second) Deposition of Plaintiff's Witness Dorr E. Felt, stipulated in from Burroughs case.

the sixth type and the seventh type, there is a spacing of 3/16 of an inch. This extra wider spacing is provided to make a distinction between hundreds and thousands, and between hundreds of thousands and millions, thus 10 000 000. These measurements which I have given pertain to that end of the type heads which bear the type characters.

R-X. Q. 446. How much lateral space is occupied by all eight of the type or type-heads in the 1890 model?

A. One and one-thirty-second of an inch.

R-X. Q. 447. In respect to the spacing of the types and the total space occupied by the eight types, which you have just explained, the types in the 1890 model correspond exactly with the types in the roll paper Comptographs you were building at that time, do they not?

A. No, in the roll paper Comptographs made at that date as a rule the extra wide spacings were located between the second and third columns and between the fifth and sixth columns to correspond with the notation of United States currency. Thus 100 000.00 .

R-X. Q. 448. How is it in respect to the total lateral space occupied by the eight types in each machine?

A. They are the same.

R-X. Q. 449. Did you or your company ever manufacture any wide paper Comptographs for the market, with the types spaced as you have explained that the types in this 1890 model are spaced?

A. I have no doubt but what we made quite a number with the types so spaced. It's a very common thing to make the distinction in the spacing of the printing type and the arrangement or positioning of the different colored keys arranged "three and three" from the right, as in the 1890 model.

R-X. Q. 450. When did you or your company build

(Second) Deposition of Plaintiff's Witness Dorr E. Felt, stipulated in from Burroughs case.

for the market the first wide paper Comptograph having such spacing of the types?

A. I cannot say.

R-X. Q. 451. Did your machine No. 1800 have such spacing of the types?

A. I do not remember.

R-X. Q. 452. Did the machine 1810?

A. No.

R-X. Q. 453. Did the machine No. 1900?

A. No, that was the bank's.

R-X. Q. 454. If your 1890 model be operated to print a single figure at each operation, and the spacing lever be depressed after each operation, the result will be a single horizontal row of figures across the sheet of paper, if the line spacing mechanism is left out of operation under the provision made for that purpose, will it not?

A. Yes, for instance, if operating as suggested by the question, I printed on the paper 474 848 I would get a total of 35 for the answer, but I do not see any possible occasion in which there could be any utility in this mode of operation, because when so operating the printing and adding cannot possibly harmonize.

R-X. Q. 455. The total you get represents the sum of the individual figures in the horizontal line added together, does it not?

A. It does, and by this mode of operating no numbers exceeding the amount of 9 in each number can be employed, and, as a matter of fact, the figures are all printed in respect to their spacing so as to read as one number and not as several items added together. I never knew or heard of this machine being operated in that manner and never contemplated it should be so operated.

R-X. Q. 456. You made special provision in this 1890 model for what you have termed "cross footing," did you not, such provision consisting in means for holding the line-spacing pawl out of operation?

(Second) Deposition of Plaintiff's Witness Dorr E. Felt, stipulated in from Burroughs case.

A. Yes, but there was no thought that this 1890 model should be operated as specified in R-X. Q. 454, the intended purpose being to add numbers consisting of one, two, six or eight figures or columns in each number and then spacing an appropriate distance so as to leave an appropriate space between the numbers, which space would be sufficient in all cases to leave an appropriate space for the largest number involved in the work when all the numbers were spaced uniformly with reference to the unit's figure in each number of each column concerned in the operation. The notches of the cross-bar were put close together with the idea of getting in uniform lateral spacing a greater or less number of uniformly spaced parallel columns on the same sheet of paper.

R-X. Q. 457. In other words, you contemplated simply spacing the successive figures or amounts in a horizontal line further apart, by repeatedly operating the spacing lever after the printing of each number or amount, instead of operating it only once; is that correct?

A. Yes, I adopted that method of feeding the carriage sidewise so as to make it possible to, by the use of the lateral spacing lever, vary the spacing between the vertical parallel columns of numbers. I did not continue to use that construction because afterwards I thought that the saving of paper was not sufficient to compensate for the repeated manipulation of the lever involved in that construction.

R-X. Q. 458. Suppose it were desired to use your 1890 model to cross-tabulate and put the numbers nine, eight, seven, six, five, four, three, two and one, will you please just state how you would operate the model for that purpose?

A. I would first throw out of action the paper-feeding

(Second) Deposition of Plaintiff's Witness Dorr E. Felt, stipulated in from Burroughs case.

pawl lettered C in the patent, which is normally in operative connection with the ratchet C^3; then I would strike the "nine key, manipulate the main operating lever on the right; then I would give the lateral spacing lever on the left-hand of the machine six impulses; then I would strike the "eight" key and give the lateral spacing lever six impulses after operating the main operating lever; then I would strike the "seven" key and operate the two levers as in the case of the "eight" and "nine" key; then the "six" key, and so on down, with each key corresponding; then I would print the answer at the end of the line.

R-X. Q. 459. And what would that be?

A. Forty-five.

R-X. Q. 460. Why did you depress the spacing lever six times after each operation in printing a number instead of some other number of times?

A. Because in practically all cross-footing, which would be the term applied to the operation implied in the question, the numbers involved in the work are usually written on the paper so that they not only fall in line horizontally, but so that after a multiplicity of lines are written, one under another, the units figure in each line shall fall in each column under the units figure of the number in the same column in the line above it, and the numbers quoted in the question being small numbers, each under 10, it is fair to presume that in writing additional lines no numbers would occur which would require a spacing of more than six impulses of the lateral spacing lever. Of course, there would be no occasion for cross-footing if only one line of numbers was involved; in that case there would be no reason why it could not be printed in a vertical column, which is the natural and simplest way to print them on the machine. The occasion for cross-footing in practical work is virtually restricted to the operation of proving the accuracy of the

(Second) Deposition of Plaintiff's Witness Dorr E. Felt, stipulated in from Burroughs case.

addition, the same as it is where the work is added mentally. The proof is obtained by adding everything vertically and then adding everything by cross-footing, and then adding the line totals of the cross-footing and see if the sum of the line totals agrees with the sum of the column totals.

R-X. Q. 461. If, instead of operating the spacing lever six times after the printing of each number, you had operated it only three times, the respective numbers in the line would have been separated three spaces from each other, instead of six, and the line shortened by that much, without affecting the addition of the numbers and the printing of the total at the end of the line, would it not?

A. Yes, but that presupposes that the numbers involved shall be very small, so as to go on the paper and leave adequate spacing between each number; and if the numbers are to be as small as those mentioned in the question, I don't think anybody would want an adding machine to sum them, as any ordinary accountant could give their sum by mere inspection.

R-X. Q. 462. And if, instead of operating the spacing lever three times after the printing of each number, you had operated it only once, the respective numbers would have been separated from each other by the width of one space, instead of the width of three spaces or six spaces, and the line correspondingly shortened without affecting the addition of the numbers or the printing of the total at the end of the line, would it not?

A. Yes, but unless the operator wrote on the paper "This is an addition of individual digits," anyone seeing the paper would take it for all one number, as the figures would be printed so close together as to appear to be one number.

R-X. Q. 463. When the spacing lever is operated only once after the printing of each number, as suggested in

(Second) Deposition of Plaintiff's Witness Dorr E. Felt, stipulated in from Burroughs case.

the last question, the numbers are separated from each other just one letter or type space of one-eighth of an inch, as they would be if written by a typewriter, are they not?

A. They are separated the same distance apart that they would be separated in the normal operation of the machine to print a vertical column in the normal operation of this 1890 model, so as to appear to be the digits pertaining to one single number written with the normal spacing ordinarily given between or pertaining to the individual digits going to make up a number, which in the case of the 1890 model approximates that of some typewriters.

R-X. Q. 464. Perhaps you have answered my question, but I am not sure of it. What I wish to know is, whether, when the model is operated in the manner mentioned in my last question, the successive numbers printed will be separated from each other by a regular type space of one-eighth of an inch, just as they would be if written on a typewriter having a letter-space movement of that distance?

By Mr. Munday: The question is objected to because the witness has already stated that the model is not intended to be so operated; and moreover, in the ordinary typewriter, there is no set arrangement of the digits in numerical order, varying by different values in multiples of ten.

A. It happens that if the machine is operated in the manner specified, which is a way of operating which was never contemplated and would result in no useful accomplishment, and by which method no amounts greater than 9 could be added together, it would produce a printed effect upon the paper which would resemble in its spacing letters written on an ordinary typewriter, but at the same time it would produce an effect of all the numbers printed constituting the constituent digits of one large

(Second) Deposition of Plaintiff's Witness Dorr E. Felt, stipulated in from Burroughs case.

number, and the answer printed (which is the only thing I can conceive of being the object of using an adding listing machine) would seem to bear no rational relation to the numbers printed in lines so spaced.

R-X. Q. 465. In this 1890 model, the printing of the figure or amount represented by any key takes place immediately upon the depression of the key, does it not?

A. Yes, it does, together with any ciphers involved in the particular number concerned, which are automatically filled in by the machine. For instance, I touch the "one" key in the fourth column on this machine and the depression of that key causes the immediate printing of 1,000, the ciphers being filled in automatically by the machine, simultaneously with the depression of the key.

R-X. Q. 466. And what you have stated in your last answer is also true of the roll-paper Comptograph which you had on the market at the time you got up this 1890 model, is it not?

A. Yes, it is.

R-X. Q. 467. You have explained that in this 1890 model the notches in the cross-bar of the paper carriage are one-eighth of an inch apart, so that the paper carriage is moved one step, one-eighth of an inch long, at each operation of the spacing lever. How far apart are the notches, and how far is the paper carriage moved at each operation of the spacing lever, in the machine of your patent here in suit?

A. In Figure 5 of the drawings of that patent they show one inch apart, but I think the machine from which those drawings were made had the notches spaced about an inch and a quarter apart, Figure 5 being reduced in scale somewhat from the size of the model.

R-X. Q. 468. So that in each operation of the spacing lever of the machine of the patent in suit the paper carriage will be moved laterally one inch and a quarter, in-

(Second) Deposition of Plaintiff's Witness Dorr E. Felt, stipulated in from Burroughs case.

stead of one-eighth of an inch as in the 1890 model. Is that correct?

A. Yes, in the cross-bar of the patent all the notches except about every tenth one is omitted, and the levers and connections which operate the pawl co-acting with those notches to give it lateral feed are so proportioned to give the pawl a greater throw and thus take the carriage a greater distance at each operation.

R-X. Q. 469. And the result is, as stated in the question, that the carriage is moved about an inch and a quarter at each operation of the spacing lever, instead of one-eighth of an inch as in the 1890 model?

A. Yes.

R-X. Q. 470. In answer to Q. 387 of your re-direct examination, you stated that your patent No. 441,233 applied for September 28, 1889, shows the construction and operation of the key-board and adding mechanism of your 1890 model. Does that patent also show the construction and operation of the printing mechanism of your 1890 model, excepting as to the laterally movable paper-carriage of the latter?

A. It shows some of it; a large part of the printing mechanism in the 1890 model is changed to make it possible to install in the machine the laterally movable paper carriage, together with the mechanism for feeding the paper vertically, and also the mechanism for feeding the paper laterally, together with such modifications in the original paper guides and ink-ribbon guides as it was necessary to make and add before the wide sheet of paper could be handled in the machine at all. Many changes and additions to the printing mechanism, aside from the construction of the paper carriage, were necessary to enable me to get the paper down into the machine where it could be acted on by the types and hammers operated by

(Second) Deposition of Plaintiff's Witness Dorr E. Felt, stipulated in from Burroughs case.

the adding mechanism of the machine and co-operate therewith.

Thereupon the further taking of testimony in this cause was adjourned until Wednesday, April 1, 1908, at 10 o'clock A. M.

Wednesday, April 1, 1908, 10 A. M.

Parties met pursuant to adjournment. Present as before.

Thereupon the re-cross examination of the witness, Mr. FELT, was resumed as follows:

R-X. Q. 471. Is there any difference between the type-heads or carriers and the co-operating hammers in your 1890 model, and those disclosed in Figure 2 of your patent 441,233?

A. In respect to the type-heads, there is no difference, but in respect to the hammers there is this difference: In converting the roll-paper machine into the 1890 model, I found it necessary to broaden the face of the hammer somewhat and make the line spacing—that is, the vertical distance between horizontal lines—considerably greater for sheet-paper work.

R-X. Q. 472. What was the occasion or necessity for broadening the striking faces of the hammer?

A. The rubber impression strip for a wide sheet of paper, of course, necessarily is very much longer than it is for roll-paper, and therefore more susceptible of displacement up and down near the center, and it is harder to control a wide sheet of paper, in connection with which no tension can be used, such as is seen bearing on the roll of "Comptograph Company's Exhibit Roll-paper Comptograph." So in using wide paper I wanted to have a greater zone of compression through which the face of the hammer acts.

(Second) Deposition of Plaintiff's Witness Dorr E. Felt, stipulated in from Burroughs case.

R-X. Q. 473. What was the occasion for giving the line-spacing mechanism greater movement, so as to space the lines further apart?

A. The face of the hammer being wider, or perhaps more correctly speaking greater in dimension up and down, the need exists for keeping the lines further apart to avoid the smutting of adjacent lines.

R-X. Q. 474. How much did you increase the dimensions of the striking face of the hammers in the 1890 as compared with the hammers of the roll-paper Comptographs that you were menufacturing at the time you built the model?

A. I should say 25 or 35 per cent.

R-X. Q. 475. How does the construction and operation of the adding and printing mechanisms disclosed in this patent 441,233 resemble or differ from the construction and operation of those mechanisms in "Complainant's Exhibit Roll-paper Comptograph"?

A. In most respects the two are alike. The principal difference is that in the patent the rubber impression strip or buffer to cushion between the hammers and the type is applied in a different way, being stretched in a vertical direction in the patent and mounted on its upper and lower end, while in the roll-paper comptograph exhibit the rubber impression strip is stretched laterally and mounted at its right and left-hand end, directly on the rocking paper guide numbered 20, 21, 7, and 24 in the patent, Figure 8. In the roll-paper comptograph exhibit the parts numbered 13, 12, 11 and 10 are omitted altogether. Also the parts 19, 18, 17, 16 and 15, which constitute mechanism for rocking this paper guide, are omitted in the roll-paper comptograph exhibit. I do not notice any other differences of function or construction at the present moment.

R-X. Q. 476. With the exception which you have pointed out, is the exhibit Roll-paper Comptograph, as a

(Second) Deposition of Plaintiff's Witness Dorr E. Felt, stipulated in from Burroughs case.

whole, constructed in substantial accordance with this patent, 441,233?

A. It is.

R-X. Q. 477. I believe you have stated that this particular machine, "Complainant's Exhibit Roll-paper Comptograph," was placed on trial with a Pittsburg bank in 1889 and sold to the bank early in 1890. Do you know whether this machine was the first of its kind which your company sold?

A. Yes, I believe it was the first adding listing machine.

R-X. Q. 478. Excepting as to the laterally movable paper carriage and accompanying provisions in the 1890 model, are that machine and the exhibit Roll-paper Comptograph substantially alike?

A. If "accompanying provisions" is intended to include all the alterations made in the printing mechanism to permit the application and operation of the laterally movable paper carriage, and if it is also intended to include all the additions to the paper-feeding, paper-controlling, paper-guiding, as well as provisions and additions thereto for preventing the broad paper interfering with or dislodging the ink ribbon, etc., etc., which it would take several days to detail, I would say, yes. For instance, it is necessary to provide against the paper from conflicting with or becoming entangled with the various parts of the old adding printing machine in any of its positions when moving from right to left or *vice versa*. It is also necessary to provide more convenient means than the roll-paper machine contained for inserting paper in the machine; and it was also necessary to provide means for taking care of the free end of the paper, both the top and bottom ends, regardless of which end in the progress of the work happened to be fed a long ways out of the machine, as both ends are free at different times in wide-paper machines, while in roll-paper machines

(Second) Deposition of Plaintiff's Witness Dorr E. Felt, stipulated in from Burroughs case.

only one end is free. And it was also necessary to add means for feeding the paper irrespective of what the position of the laterally movable paper-carriage might be from right to left, which would not in any way interfere with the lateral movement of the paper-carriage, regardless of the fact that this feeding movement for the line-spacing—that is, the vertical feed—is actuated automatically by the main operating lever of the machine, which does not accompany the paper-carriage in its lateral movement but remains stationary in respect to lateral movement. I will not attempt to enumerate, even generally, all the differences.

R-X. Q. 479. If the laterally-movable paper-carriage of the 1890 model were bodily removed from the machine, how would the parts of the adding and printing mechanisms then remaining in the machine differ from the corresponding parts in the exhibit Roll-paper Comptograph?

A. To the observer the most obvious thing which the aspect of the machine would then present would be that that part below the hammers and just back of the type and ribbon, which in the roll-paper comptograph appears to be filled with mechanism, in the 1890 model would disclose a void or tunnel, about the size of a man's arm, extending through the machine from right to left, as though a cannonball had been shot through it, and then the following mechanisms, among others, added, or changed: On each side of the machine toward the back end a C-shaped casting, extending above the original frame of the machine, and providing at both the top and bottom of each casting a guide or support for the laterally-movable paper-carriage, to support and control it and guide it in its movement from right to left.

The lower part of these C-shaped castings extends down around and up again to a point on the side frame

(Second) Deposition of Plaintiff's Witness Dorr E. Felt, stipulated in from Burroughs case.

of the machine a little below and about in line with the ribbon spools, the upper end of these castings being joined by a third casting across the top of the original machine frame, in such manner as to stiffen and strengthen the whole, so that there shall be no distortion of the frame of the machine due to manipulation of or over-hang of the laterally-movable paper carriage in either direction. On the right hand one of these C-shaped castings would be seen mounted a sleeve, so that the sleeve would rotate freely, but could not move laterally. On this sleeve would be seen a ratchet lettered C^3 in the patent in suit and also in the five sheets of drawings of the 1890 model (see Fig. 7 in both). Rigidly attached to this ratchet, so as to rotate in unison therewith, would be seen a toothed wheel having the same number of points as the ratchet has teeth. Co-acting with the toothed-wheel, which is lettered D11 in the patent and exhibit drawings, is the friction-brake H′ for centering and holding in position, to assure good alignment of the printing, the sleeve on which the ratchet C^3 and toothed wheel D^{11} are mounted.

In the use of reference numbers and letters herein it may be assumed throughout that the same reference numbers attached to the same elements or members can be found both in the patent drawings and on the five sheets of drawing in exhibit which illustrate the 1890 model.

This spring-pressed brake H′ is pivoted to one of the C-shaped castings on the right-hand side of the machine at the upper back end of the machine, the lower end of the spring-brake having a V-shaped contour, which is adapted to fit in between the teeth of the toothed wheel D^{11} and maintain the sleeve on which D^{11} is mounted in fixed angular positions of equi-spaced distances 36° apart, so as to present the printing line on the machine

(Second) Deposition of Plaintiff's Witness Dorr E. Felt, stipulated in from Burroughs case.

successive equi-spaced points or lines on the paper and insure uniform line spacing in its vertical feed, while at the same time, due to the contour of the spring-brake, permitting the brake to yield and allow the paper to be fed either up or down—that is, forward or backward—at the will of the operator, it being necessary, in the use of sheet paper, to be able to turn the paper backward preparatory to beginning a second column on the sheet—something which is not necessary in a roll-paper machine, where the paper feeds right through in one continuous strip; hence, the necessity of giving the spring-brake such contour, and the teeth of the toothed wheel such shape, that the paper can be driven or fed in either direction at the will of the operator when he takes hold of the paper-feeding knob on the end of the carriage. The sleeve which I have repeatedly referred to as having mounted on it the ratchet and the toothed wheel is not only hollow, but the hole through it is provided with a feather adapted to engage with a long spline shaft, which came out of the machine when the laterally-movable carriage was taken out of it, as pre-supposed in the question. I merely mention this so that it may be understood that the paper-feeding mechanism in the laterally-movable paper-carriage is actuated by these parts which I have just described, which is necessary to do to make clear their purpose and function; and the reason why the ratchet is mounted on a hollow sleeve instead of on a shaft. Co-operating with this ratchet C^3 is a paper-feeding pawl C, the function of which is to feed the paper in its vertical or line-spacing movement by advancing the ratchet one tooth at a time. This pawl is pivotally mounted on a crescent-shaped member, 29, which connects the main operating lever of the machine, numbered 7, Figure 1, with the crank 30 to lift the hammers and store the power for making the printed impression. The relation of the parts is such that whenever the main op-

(Second) Deposition of Plaintiff's Witness Dorr E. Felt, stipulated in from Burroughs case.

erating lever is manipulated and, as a consequence, the crescent-shaped member 29 moved forward and back, it carries the pawl with it so as to rotate the sleeve through the medium of the ratchet C^3 and thus feed the paper vertically, irrespective of the position of the carriage from right to left, or *vice versa*.

The observer of the 1890 model with the laterally-movable paper carriage taken out of it would see two levers, shown clearly in Figure 7 of the drawings of the 1890 model, just below the ratchet C^3, one of which is pivoted at its center and the other at its top. The relation of these two levers to the rest of the mechanism in the 1890 model is such that when the operator wants to turn the paper backwards he grasps the knob on the end of the paper-feeding roll with the thumb and first finger and with the third finger presses forward a depending lever just back and below the knob which he has grasped with his thumb and finger, causing one of the paper-guides in the laterally-movable paper-carriage to swing on its hinge, the paper-guide in turn co-acting with the two levers just described as positioned beneath the ratchet C^3, to swing the levers on their pivot, which levers in turn press the pawl C out of engagement with the ratchet so as not to obstruct the return or backward feed of the paper. In the patent these two levers are not shown, because they are not necessary in the structure shown in the patent, wherein the paper-feeding pawl C is given a different contour at its end which engages with the ratchet C^3, so that while it serves to rotate the ratchet in the line-spacing movement it does not obstruct the backward rotation of the ratchet for the purpose of turning the paper backward, when all the parts of the machine are in their normal position of rest. This structure and operation of the pawl C being one of the things that I mentioned as having been invented between the time when I made the 1890 model and the time when I applied for

(Second) Deposition of Plaintiff's Witness Dorr E. Felt, stipulated in from Burroughs case.

the patent in suit. It will be observed that the unusual form given to the connection 29 in the model and in the patent is for the purpose of communicating the motion of the main operating lever to the hammer mechanism without interfering with the lateral movement of the paper-carriage, as would such a connection as is found in the roll-paper comptograph, and also to provide a mounting at the proper location for the paper-feeding pawl which in the roll-paper comptograph is not mounted on that connection 29 as it is in the 1890 model and in the patent in suit.

With the laterally-movable paper-carriage withdrawn from the 1890 model, the observer would note differently-constructed guides for the ribbon which serves to carry the ribbon from the spool around in front of the type into the printing line, these guides having ribs at their upper and lower edges and there being mounted on the guides at their ends nearest the printing types two shields, these shields presenting a convex face toward the paper and a concave face toward the ribbon, so that the paper will not catch on these shields when traveling by the printing line from the left to the right and *vice versa*. These shields can only be observed or seen by looking into the 1890 model from the back end, after lifting the rubber impression strip or buffer away from the printing line. These two shields are fastened to the ribbon guides at their top in the 1890 model. A pair of shields somewhat similar are in the roll-paper comptograph, but they are not made convex on the side next the paper and concave on the side next the ribbon, because in a roll-paper comptograph there is no sidewise travel of the paper, which would tend to catch on the edge of the ribbon-shield; nor are the ribs on the upper and lower edges of the ribbon guide found in the roll-paper comptograph, because in the roll-paper comptograph there is not the frequent, repeated travel of the edge of the paper up and down past the rib-

(Second) Deposition of Plaintiff's Witness Dorr E. Felt, stipulated in from Burroughs case.

bon, tending to catch on the ribbon and displace it if not properly guarded in this respect. The observer would also notice two horns on the ends of the ribbon guides, extending upwardly and toward the front of the machine, close to and adjacent to the printing type, one on either side of the series of side-by-side type-heads. These horns are put on to assist in inserting a wide sheet of paper, which, when used, requires the re-insertion of new sheets, contra-distinguished from the use of roll-paper where the end of the paper-ribbon once being inserted it runs along for a long time without the necessity of re-inserting it.

Just above these horns the observer would notice a plate of metal extending across in front of the battery of hammers, to prevent the sheet of paper, when moving upward in its line-spacing feeding movement, or in its sidewise movement getting entangled with the hammer mechanism. He would also notice two larger plates of metal, extending out, one on either side of the machine about 4 inches, to prevent the edges of the sheet of paper, in its sidewise travel, catching on or becoming entangled with and obstructed in its sidewise movement by the frame of the machine. These three plates of metal, which are paper guides, which I have just described, are somewhat different from the corresponding parts of the patent in suit, the 1890 model in this respect being like patent No. 694,-955, the form in which all the later wide-paper comptographs have been constructed. In this respect, and in a number of other respects, the 1890 model resembles the wide-paper comptographs as constructed for the market more nearly than it does the patent in suit.

I now notice, in making a critical comparison of this 1890 model and the Comptograph Company's Exhibit Roll-paper Machine, that the whole back end or printing end of the machine frame was reconstructed in making this 1890 model, the upper web of the frame reaching

(Second) Deposition of Plaintiff's Witness Dorr E. Felt, stipulated in from Burroughs case.

clear across to the left-hand side of the machine and there being supported by an upright web of sheet-metal the same as the top, so as to make it a more rigid support and frame-structure.

Witness here suspends his answer and the further taking of testimony herein is adjourned until Thursday, April 2, 1908, at 10 o'clock A. M.

Thursday, April 2, 1908, 10 A. M.

Met pursuant to adjournment. Present as before.

And thereupon the witness, Mr. FELT, continued his answer to R-X. Q. 479, as follows:

The observer would also notice a difference in the hammers for impressing the paper against the ribbon and type, already described in my answer to R-X. Q. 471.

Looking at the 1890 model from the left, after the laterally-movable paper-carriage has been withdrawn from it, the observer would notice a hand lever just to the left of the key-board, for the purpose of feeding the paper-carriage and paper sidewise, after printing one column of numbers preparatory to starting a second column on the same sheet. This lever is pivoted on the left-hand end of the shaft between the keys and the ribbon-spools, in the 1890 model and in the patent in suit. One part of the lever extends downwardly into the machine and is numbered E^2 in the patent and in the drawings of 1890 model. The other part extends toward the front of the machine beside the keys, in the 1890 model, and is lettered E. In the patent this part of the hand lever is moved to the other end of the shaft, so that the operator can get hold of it on the right-hand side of the machine instead of the left-hand side of the machine. It is shown in the patent drawings, Figure 1. Pivotally connected to the lower end of the arm E^2 of the hand lever is a crescent-shaped member E^3, the other end of which is pivotally

(Second) Deposition of Plaintiff's Witness Dorr E. Felt, stipulated in from Burroughs case.

connected to the arm of the bell-crank E^4. The bell-crank, in turn, is pivoted to the pin or screw E^5, so that the operation of a hand-lever for side-spacing serves to rock the bell-crank E^4 on its pivot. The bell-crank carries a pawl E^6 best shown in Figure 5 and 5^a. The free end of this pawl engages, when the hand-lever is operated, with the notches E^9 in the cross-bar A′ of the laterally-movable paper-carriage, for the purpose of feeding the paper and paper-carriage from the right to the left after completing the addition and printing of one column of numbers preparatory to the starting of another column. The observer would also see, on the left-hand side of the machine, a lever which is numbered "E, patent No. 644,287," in the drawings of the 1890 model (see Fig. 3), and also E in the patent No. 644,287; which shows the wide-paper machines as constructed for the market. The upper point of this lever is designed to engage with the notches E^9 in the cross-bar of the paper-carriage, at the conclusion of the sidewise feeding movement of the latter, and to prevent it being thrown too far by a quick impulse given to the sidewise spacing hand-lever E, the object being to insure uniform spacings between the columns of numbers printed and also to always be able to position the carriage exactly to any one of a number of equi-spaced positions with reference to the sidewise movement. This lever "E, patent No. 644,287", is pivoted at its center (see Fig. 3 of the drawings of the 1890 model) to the frame of the machine, having a lower arm depending from the pivot which at its lower end is engaged by a pin extending onto the crescent-shaped member E^3, and serving to withdraw the upper end of the lever from the notches E^9 at all times except when it is desired that it shall engage therewith, being impelled to such engagement by a spring clearly shown in the drawings. This lever is not shown in the drawings of the patent in suit, because in that patent the parts are arranged to prevent overthrow in the sidewise

(Second) Deposition of Plaintiff's Witness Dorr E. Felt, stipulated in from Burroughs case.

feeding movement of the paper-carriage by having the end of the pawl E^6 wedge in between the notch E^9 and the side frame of the machine A^6 at the conclusion of its movement toward the left to feed the carriage, as explained in lines 120 to 124, page 2 of the specifications of the patent in suit.

I have not said anything about the provision for putting the normal paper-feeding mechanism and of operation for the purpose of making cross-footings, as is provided for in the 1890 model, as that has nothing to do with the claims 1, 2 and 4 involved in this suit. And since the question pre-supposes the paper-carriage to have been withdrawn from the machine, I have not said anything about the mechanism of the paper-carriage or the functions of the various parts found therein which are not found in the "Comptograph Company's Exhibit Roll-paper Comptograph."

The more I handle and examine into this 1890 model, the more surprised I am and impressed with the fact that during the eighteen years since this 1890 model was made there have been almost no improvements over the 1890 model developed, as far as the handling of wide-paper work is concerned. What have been made pertain more directly to facilitating the use of carbon paper, and the devices invented and patented by me, one to make it impossible, in the ordinary use of the machine, to feed the paper clear out of the back of the feeding rolls, and the other to provide a quick automatic return for the paper after completing one column preparatory to start another. These last two features or functions are not found in any other adding or listing machine now or heretofore put on the market except those made by the Comptograph Company. Most of the improvements in adding listing machines during that period of eighteen years pertain more particularly to the adding mechanism. In applying this wide carrage when I made the 1890 model, I made it

(Second) Deposition of Plaintiff's Witness Dorr E. Felt, stipulated in from Burroughs case.

work in perfect harmony with the adding and printing mechanism of the machine, after making the changes in the same, sums of which I have described in answer to this question, when operated by and in connection with the same, and have always found the wide-paper mechanism used in the 1890 model susceptible of being adapted to work perfectly in connection with other forms of adding and printing mechanisms. This 1890 model as it stands today, after the accumulation of eighteen years of dust and rust and rough handling, will do very good work in a very convenient and rapid manner, although of course it doesn't look as pretty as the modern machines, owing to the type not being so perfectly cut as on the modern machine, it doesn't print quite as pretty work as the modern machine.

R-X. Q. 480. Notwithstanding all you have said, it is a fact, is it not, that if the laterally-movable paper-carriage were bodily removed from the 1890 model, the adding mechanism of the machine would continue to operate just as it did before, and just as it does in the exhibit Roll-paper Comptograph?

A. Yes, such changes as were made in the adding mechanism were changes of structure and not of function.

R-X. Q. 481. What were the changes in the adding mechanism that were necessitated by the introduction of the laterally-movable paper-carriage into the machine?

A. In clearing away the mechanism to make room for the laterally-movable paper-carriage, I found that spring 31, patent No. 441,233, which shows substantially the adding mechanism of "Comptograph Company's Exhibit Roll-paper Comptograph" would interfere with the laterally-movable paper-carriage. This spring serves to return to normal position a long lever, one for each column of the machine, which is pivoted at its back end at the extreme rear of the machine, and on its front end has gear

(Second) Deposition of Plaintiff's Witness Dorr E. Felt, stipulated in from Burroughs case.

teeth on it, which mesh with a pinion, which pinion, through the medium of a pawl and ratchet mechanism, operates the numeral wheels to add. In the roll-paper comptograph this spring is attached to the top of the long lever just described and serves to return the lever to normal position after the pressure of a key to add. If so attached, unless made very short, it would not possess sufficient elasticity and resilience to maintain a tension which would always return the long lever to normal, but soon "set" so that it would not completely return the lever. Therefore I moved this spring to the other side of the lever—that is, to the right-hand side of the lever—where I could reach past the top of the lever and down beside it to a pin, which I inserted in the right-hand side of the lever, and onto which I hooked one end of the spring and thus secured sufficient length in the spring to make it operative, and so that it would retain its original tension after use and not "set".

The frame-work of the adding mechanism consists of two long plates, about 3 inches wide, numbered K in patent No. 441,233, supplemented by a series of seven plates D, one for each column of the machine, the whole joined together by four tie-rods plainly shown in Figure 2, patent No. 441,233, the plates being equi-spaced by tubes inserted on the tie-rods. To clear away and make room for the sidewise travel of the laterally-movable paper-carriage, it was necessary to change the form of these side-plates K of the frame of the adding mechanism by cutting several square inches of them out, and it was also necessary to cut off the upper forward corner of each of the seven intersection plates and drill a new hole in them for the purpose of inserting a rod numbered 30 in patent No. 441,233 in a new position, to keep the other end of the spring 31 out of the zone occupied by the laterally-movable paper-carriage, which rod 30 in the roll-paper machine is positioned in the space traveled in by the

(Second) Deposition of Plaintiff's Witness Dorr E. Felt, stipulated in from Burroughs case.

laterally-movable paper carriage. In the drawings of the 1890 model the new position of this rod 30 will be readily recognized and by looking at the patent No. 441,233 the old position of the same rod will be seen as it is in the roll-paper comptograph, occupying a position which would completely obstruct the sidewise travel of the laterally-movable paper-carriage. This spring, it will be remembered, is one which returns the column-actuators of the adding mechanism to normal position, there being eight of these springs, one for each column of the machine, they being hooked at one end to the rod 30.

I now notice that I overlooked a very important matter which belonged in the answer to the next to the last preceding question, the one which I finished answering this morning.

By examining the Comptograph Company's Exhibit Roll-paper Machine and the patent 441,233, it will be observed that in it there are a series of eight pieces numbered 28 in the drawings of the patent; that these pieces 28 extend around two of the rolls, which are numbered 8 and 9 in the drawings of the patent, which two rolls embraced by the pieces 28 are the two lower ones of the paper-feeding rolls; and that these pieces 28 are guides for the paper and serve to control the lower end of the paper and make it, when fed into the machine, pass around one of the rolls and turn back and come up out of the machine again. By examining the roll-paper comptograph it will be noticed that two of these pieces 28 extend up between the second and third type and between the fifth and sixth type, and are at one point a little bit in advance of the type in the direction towards the paper, so that in addition to serving the purpose of carrying the paper around the rolls and up again when being placed in the machine, the upper end of the two long ones positioned between the side by side type, as just explained, tend to guard the ribbon against becoming en-

(Second) Deposition of Plaintiff's Witness Dorr E. Felt, stipulated in from Burroughs case.

tangled with the type whenever the type is moving into position in response to the depression of a key. If it were not for these pieces 28 there would be a pronounced liability for any buckle or imperfection in the paper pressing the ribbon against the type so that it would become entangled with the type, and thus the ribbon is displaced so that there could be no printing and also on account of the ribbon and type becoming entangled the parts of the adding mechanism would be prevented from returning to normal position, so that not only would the printing stop, but the adding would be incorrect. It will be seen by referring to Figure 2 of patent 441,233 that these pieces 28 occupy the very space through which the laterally-movable paper-carriage must travel, and they are supported on cross-rods 29 and 30, both of which occupy space which must be cleared to permit of the sidewise travel of the laterally-movable paper-carriage. Since in the laterally-movable paper-carriage there are supplied in the carriage itself of the 1890 model, and in the patent in suit, different kinds of guides for guiding the paper down into the machine, around the rolls and up out again, some of these guides 28, in Comptograph Company's Exhibit Roll-paper Comptograph, can be dispensed with, but the two which extend up between the side-by-side type-heads, and guard the ribbon against entanglement with the type, could not be dispensed with, and something had to be provided for guarding the ribbon; and so I found it necessary to insert into the machine, beneath the type-heads and ribbon spools, a cross-bar not found in the roll-paper comptograph or the patent No. 441,233 heretofore herein referred to, on which to support these ribbon guards between the type-heads, the latter then being redesigned and supported by the cross-rod just mentioned and another cross-rod close to the row of No. 9 keys already in the roll-paper comptograph. These guards for the ribbon, which at the upper end resemble the pieces 28 of the

(Second) Deposition of Plaintiff's Witness Dorr E. Felt, stipulated in from Burroughs case.

roll-paper comptograph, and their manner of support are indicated in dotted lines of Figure 2 of the drawings of the 1890 model, and are one of the things in which what would remain of the printing mechanism of the 1890 model, after the laterally-movable paper-carriage had been withdrawn from it, is very different from what is found in Comptograph Company's Exhibit Roll-paper Comptograph. There are other differences—such, for instance, as the guard at the back end of the machine, near its center, which prevents the drawing of the laterally-movable paper-carriage toward the right far enough to bend and disorder one of the guides for the ribbon.

R-X. Q. 482. Referring to R-X. Q. 480, it is also a fact, is it not, that if the laterally-movable paper-carriage were bodily removed from the 1890 model the operating keys and type heads or sectors and hammer mechanism would continue to operate and to co-operate with each other, to print the values of the operated keys upon any piece of paper interposed between the types and the hammers, just as before the removal of the paper-carriage and just as they do in the Exhibit Roll-paper Comptograph?

A. Why, no. I suppose you could hold a piece of paper in your hand in front of the type and print one number, but the paper-carriage being removed there would be no means remaining for printing a series or several series of added numbers in an arithmetical relation to one another, and in tabular form and proper alignment vertically and laterally.

R-X. Q. 483. But the keys and types and hammer mechanism would co-operate with each other, just as before, to print the values of the operated keys on any paper interposed between the type and hammers, and the only difference would be the absence of a mechanical means of support for holding and positioning such paper, for the purposes you have mentioned; is that not a fact?

(Second) Deposition of Plaintiff's Witness Dorr E. Felt, stipulated in from Burroughs case.

By Mr. Murray: I object to the use of the word "support" in the question, if by support is meant a platen.

A. As stated in answer to the last question, if a piece of paper was held there by hand and could be held steady enough, I have no doubt but what a number could be impressed on it, between the types and the hammers, as a consequence of pressing a key; but it would certainly be an idle and useless operation.

R-X. Q. 484. So far as the mechanical co-operation of the keys, types and hammer mechanism is concerned, what difference does it make how the paper to be printed upon is supported and moved, or, indeed, whether any paper is present at all or not?

A. If no paper were present, the hammers would press the rubber impression strip directly against the ribbon and transfer ink from the ribbon to the rubber impression strip, and when a piece of paper was put in afterwards it would smut the paper all up, as a consequence of this ink transferred to the impression strip. As far as the mere mechanical movements of the type and hammers is concerned, the withdrawing of the paper-carriage would not prevent those movements, and in designing this 1890 model I did not do anything to or make any changes or additions to the printing mechanism or the adding mechanism which would make them inoperative.

R-X. Q. 485. If your 1890 model and the Exhibit Roll-paper Comptograph be each operated, by the successive depression of keys, without any paper in either machine, what difference will there be between the two machines in respect to the mechanical co-operation of the keys and type and hammer mechanism in each machine?

A. Neither are made to be operated without any paper in, and I cannot see how either could operate with any useful purpose without the paper in the machine.

(Second) Deposition of Plaintiff's Witness Dorr E. Felt, stipulated in from Burroughs case.

On the contrary, the result would be injurious to the machines.

R-X. Q. 486. But without regard to the utility or lack of utility of such operation of the machines, what difference would there be between them in the respect inquired about?

A. I think I made it perfectly plain in answer to the last question that there would be no co-operation at all.

R-X. Q. 487. In each machine, under the conditions mentioned, when any key was depressed the type corresponding in value to such key would be brought to the printing line, and the hammer co-operating with the type-head or sector bearing such type would be released and thrown by its spring against such type and press the inking ribbon against the same, would it not?

A. If prior to touching the keys described in the question the main operating lever of the machine had been depressed to store power in the hammer springs, and if the same lever is depressed prior to the successive touching of any key in the same column or columns, so that the hammers may be ready to deliver a blow each time a key or a number of keys is touched, the touching of a key in either machine would cause the hammer to deliver a blow against the type at the printing line after the particular type corresponding to the key touched had been already presented at the printing line.

R-X. Q. 488. In the normal operation of both your 1890 model and the Exhibit Roll-paper Comptograph the main operating lever is always, and necessarily, depressed between successive operations of the machine, is it not?

A. Yes.

R-X. Q. 489. So that when any of the keys are depressed the hammers are normally ready for action, are they not?

A. If there be any paper in the machine to be acted

(Second) Deposition of Plaintiff's Witness Dorr E. Felt, stipulated in from Burroughs case.

upon, as the result of the blow of the hammer, they are ready for action.

R-X. Q. 490. Will you please look at the 1890 model, which has no paper in it at the present time, and state upon the record just what takes place when I depress one of the keys?

A. I observed that while asking the question you first operated the main operating lever of the machine and then depressed the 5 key in the fourth column, and as a consequence the fourth type-head swung up so as to present the type figure 5 at the printing line, after which, at the conclusion of the key stroke, four printing hammers—that of the fourth column and the three columns to the right of the fourth column—descended and struck a blow against the four type-heads, so that if a piece of paper had been in the machine there would have been printed on it the number 5 000.

R-X. Q. 491. Will you now please look at the Exhibit Roll-paper Comptograph, which likewise has no paper in it, at the present time, and state upon the record what takes place when I depress the key corresponding to the one previously depressed in the 1890 model?

A. I do observe how you operated the machine, which was as follows: First you depressed the main operating lever of the machine, just prior to beginning to ask the question; then, while asking the question, you depressed the 5 key in the fourth column, and the type-head in that column came up as described with reference to the 1890 model in answer to the last question, and at the conclusion of the key stroke four type-hammers came down to deliver blows in the same manner described in the last answer, and if a piece of paper had been in there would have been the number 5 000 printed.

R-X. Q. 492. In each instance the operation of the machine, to which I called your attention, was the normal operation of the machine for adding and printing the

(Second) Deposition of Plaintiff's Witness Dorr E. Felt, stipulated in from Burroughs case.

number 5 000, with the exception that there was no paper in either machine, was it not?

A. Yes.

Thereupon the further taking of testimony in this cause was adjourned until Friday, April 3, 1908, at 10 o'clock A. M.

FRIDAY, April 3, 1908, 10 A. M.

Met pursuant to adjournment. Present, as before.

And thereupon the re-cross examination of the witness, Mr. Felt, was resumed, as follows:

R-X. Q. 493. And the operation, and the result of the operation, was precisely the same in both machines, was it not?

A. As far as the types, the hammers and the keys were concerned, the movements of the parts were precisely the same, but when the main operating lever was manipulated prior to touching the key, in addition to cocking the hammers and performing other functions in connection with the adding and printing, such as feeding the ribbon, in the case of the roll-paper machine it served to rotate the paper-feeding-rolls in that machine, which cannot be moved laterally with reference to the main operating lever and the other parts of the machine, while in the case of the 1890 model, on account of the very extensive changes and additions to the roll-paper machine made in inventing and constructing the 1890 model, it served to rotate the paper-feeding rolls to effect the line-spacing movement, which rolls are susceptible of lateral movement with respect to the lever and the rest of the machine, for the purpose of printing vertical parallel columns on one sheet of paper, without in any way destroying or rendering inoperative the mechanism for automatically feeding the paper in its line-spacing movement whenever the main operating lever of the machine was manipulated, so that all of the numbers in each of

(Second) Deposition of Plaintiff's Witness Dorr E. Felt, stipulated in from Burroughs case.

the columns of numbers would be printed with units falling under units, tens under tens, etc., to preserve the arithmetical relation of all and each of the numbers to one another.

R-X. Q. 494. In other words, in each machine the operation of the main operating lever served to rotate the paper-feeding rolls, which rolls in one machine are laterally movable and in the other not. Is that not the fact?

A. That is a fact so far as the statement goes. Of course, there are many other differences pertaining to the wide paper rolls, and the mechanism connected therewith for feeding and controlling the paper, both in its vertical and horizontal movements, as well as other differences between the two machines which were necessary to make it possible to have a laterally-movable paper-carriage work in co-operation with the adding and printing mechanism where wide paper is used. A great many of these differences are found in the laterally-movable paper-carriage itself; others are found in the adding and printing mechanism, some of the latter of which I have described in my answers to R-X. Q. 479 and R-X. Q. 481.

R-X. Q. 495. But the only function which the main operating lever performs with respect to the paper-feeding rolls, in either machine, is simply to rotate them. Is that not the fact?

A. In the roll-paper machine they perform the function of rotating them step-by-step in a manner to produce uniform equi-spacing between the lines only while the rolls occupy one fixed position with respect to lateral movement. In the wide paper machine, or the 1890 model, they perform that function irrespective of the position of the rolls with respect to the main operating lever and the adding and printing mechanism.

R-X. Q. 496. I notice that prior to answering the last

(Second) Deposition of Plaintiff's Witness Dorr E. Felt, stipulated in from Burroughs case.

question you repeatedly depressed the main operating lever of the 1890 model and carefully observed the resulting operation. Will you please state on the record what effect those depressions of the operating lever had upon the paper-feeding rolls, other than to rotate them?

A. The effect of repeatedly manipulating the main operating lever as described in the question was to rotate the paper-feeding rolls in such manner that if a paper had been in, successive points or lines on the paper would have been presented at the printing line of the machine one after another and equally spaced. I now put a sheet of paper in the machine and I touch the 5 key in the third column, operate the main operating lever, and I immediately see printed on the paper 500. I then touch the 3 key in the fourth column, operate the main operating lever, and I immediately see printed on the paper 3 000 immediately beneath the 500. So that all the characters in both numbers have to one another the proper relation with respect to units, tens, hundreds, thousands, etc. I now touch the 5 key in the fourth column and I likewise see that printed beneath the 3 000, and looking at the register of the machine, where the footing of these three numbers is displayed automatically by the machine, I see that the total is 8 500, which I now strike on the keys and thus print the total of the column beneath the same. I now operate the sidewise spacing lever at the left of the machine 10 strokes, turn the paper back to the initial starting point, cancel the machine to zero, and touch the 6 key in the second column, operate the spacing lever, then operate the 4 key in the fifth column, operate the spacing lever, then touch the 4 key in the third column, the 3 key in the fourth column, when I see the footing of the second column of numbers printed on the same sheet to the left of the first column, and as before in respect to the first column, I observe the total and print the same on the paper by ma-

(Second) Deposition of Plaintiff's Witness Dorr E. Felt, stipulated in from Burroughs case.

nipulating the keys, and I now have printed on the paper two columns of numbers side by side, with the answer to each printed beneath its respective column. If I had preferred, I could have omitted to print the answer under the first column and at the conclusion of the second column the machine would have displayed the total of both columns, which I could have printed by the machine under the second column as the total of all the numbers printed on the paper. I take hold of the laterally-movable paper-carriage and slide it from side to side back and forth; the paper does not interfere with or become entangled with any of the parts of the adding or printing mechanism, and I find that with a wide sheet of paper in the machine everything works properly and that the main operating lever feeds the paper in its line-spacing movement irrespective of the position of the carriage either toward the left or the right of the machine.

This performance recalls to mind the fact that naturally my first thought of an adding listing machine of any kind was based on printing on an ordinary sheet of paper, but when I came to consider all the difficulties in the way of making a machine which would both add and print numbers on a wide sheet of paper, and preserve their arithmetical relation to one another, the problem of devising an adding machine with suitable printing mechanism, which would work in co-operation with mechanism for controlling a sheet of paper which could be moved and controlled in various positions to print a multiplicity of vertical parallel columns on the same sheet, seemed too great for solution; so I simply, in the first instance, adopted the plan of printing on a piece of paper fed off the roll. I guess the same problem looked to others the same as it did to me, because Mr. Burroughs took the same easier way out of the difficulty that

(Second) Deposition of Plaintiff's Witness Dorr E. Felt, stipulated in from Burroughs case.

I did, by making a machine to print off a roll of paper, and so did Mr. Henry Potting, the first man to construct an adding listing machine.

By Mr. MUNDAY: I offer in evidence the sheet of paper manipulated in the 1890 machine by the witness, and which is now removed from the machine for that purpose; said sheet of paper is to be marked "Complainant's Exhibit Sample of Present Work on the 1890 Machine."

R-X. Q. 497. Will you not please answer my last question, and confine your answer to the question?

A. The simple operation of merely repeatedly depressing the main operating lever, as described in the question, did have no other effect than that of rotating the laterally-movable paper-feeding roll in such manner that if the paper had been in the machine successive points or lines on the paper would have been presented at the printing line of the machine one after another and equi-spaced apart, as stated by me in my answer to the last question.

R-X. Q. 498. And if the main operating lever in the roll paper Comptograph be depressed a number of times in succession, just as you depressed the operating lever of the 1890 model prior to answering R-X. Q. 495, such depressions of the lever in the roll paper machine would have precisely the same effect upon the paper feeding rolls in that machine as the depressions of the operating lever of the 1890 model had upon the paper feeding rolls in the latter machine. Is that not so?

A. The manipulation of the main operating lever of the roll paper machine, the same as the manipulation of the lever of the 1890 model, would cause the paper feeding rolls to rotate and feed the paper in its line-spacing movements, these rolls, of course, not being susceptible of such feeding, except when they are in one fixed position with respect to the machine.

(Second) Deposition of Plaintiff's Witness Dorr E. Felt, stipulated in from Burroughs case.

R-X. Q. 499. The depression of the main operating lever in the exhibit roll paper Comptograph serves to rotate the paper-feeding rolls a definite distance, advance the inking ribbon, and cock or set the type-hammers; does it not?

A. It does.

R-X. Q. 500. What else does a depression of the main operating lever in the 1890 model do?

A. It does the same thing, not only in one position of the carriage with respect to its lateral movement, but in any position of the carriage with respect to its lateral movement, although, of course, it doesn't do it by exactly the same mechanism, for to make it do it in the wide paper machine a reorganization and many additions to the mechanism contained in the roll-paper machine are necessary.

R-X. Q. 501. But that is all it does in the wide paper machine that it does not do in the roll-paper machine; is that a fact?

A. That is all that the mere repeated depression of the main operating lever does, which operation, of course, without being performed in connection with other operations, would produce no useful result, in either case. And, as a consequence of operating the 1890 model as it is designed to be operated, a very useful result can be obtained which cannot be obtained by means of any kind of operation of the roll-paper Comptograph.

R-X. Q. 502. What function does the main operating lever in the 1890 model ever perform, under any circumstances or conditions, beyond rotating the paper-feeding rolls a definite distance, advancing the inking ribbon, and cocking or setting the type-hammer?

A. It does not perform any other function than the three stated, the first of which it performs automatically, irrespective of the position of the laterally-mova-

(Second) Deposition of Plaintiff's Witness Dorr E. Felt, stipulated in from Burroughs case.

ble paper-carriage, which it does not do in the roll-paper Comptograph.

R-X. Q. 503. In what respect is the rotation of the paper-feeding rolls by the main operating lever in the 1890 model "automatic" as distinguished from the rotation of the paper-feeding rolls by the main operating lever in the roll-paper Comptograph? Is the operation any more "automatic" in the one case than it is in the other?

A. Yes, in the 1890 model it is automatic in any position of the carriage, while in the roll-paper Comptograph it is automatic only in one position of the carriage.

R-X. Q. 504. In both cases the main operating lever is depressed by hand, and the hand power thus applied to it is transmitted to the paper-feeding rolls, to rotate them. Is that not true?

A. The prime function of the main operating lever is to cock the hammers for printing, and it has mechanism very simple in the case of the roll-paper machine connected to it, or actuated by it, for at the same time automatically feeding the paper one line space. It also has connected to it mechanism for automatically feeding the ribbon. Since the problem of feeding the paper or rotating the feeding-rolls when they are mounted in a laterally-movable paper-carriage is quite a problem, the mechanism for automatically feeding the paper in any position of the carriage in the 1890 model is necessarily much more complicated than it is in the roll-paper Comptograph.

R-X. Q. 505. But in both cases, as stated in my last question, the hand power applied to the lever is transmitted to the paper-feeding rolls to rotate them; is that not true?

A. Yes, but in one case the accomplishment of this result is a very simple matter and in the other case it

(Second) Deposition of Plaintiff's Witness Dorr E. Felt, stipulated in from Burroughs case.

presents problems rather difficult of solution in the way of inventing mechanism to effect the result.

R-X. Q. 506. And in both machines a portion of the hand power applied to the lever is transmitted to the type-hammers, to cock or set them; is that not true?

A. Yes.

R-X. Q. 507. And in both machines a portion of the hand power applied to the lever is also transmitted to the inking ribbon mechanism to advance the inking ribbon; is that not true?

A. Yes, a little of the power is.

R-X. Q. 508. Why do you say, in answer to R-X. Q. 504, that the "prime function" of the main operating lever is to cock the hammers for printing? Is it not just as essential to the operation of both machines that the paper-feeding rolls shall be rotated, to advance the paper after each operation, as that the hammers shall be recocked or set after each operation?

A. No, because if the hammers were not set no printing at all would result, but if the line-spacing mechanism was not connected to the main operating lever one could still add and print columns of figures equi-spaced by advancing the paper in its line-spacing movement by hand, taking hold of the knob to do so after printing each item added.

R-X. Q. 509. Could not the hammers be recocked by hand, just as readily as the paper could be advanced by hand, if a simple provision were made for the purpose?

A. I am not prepared to say just what kind of provision for the purpose could be made, without giving it some thought, other than the provision which is already made in the hand lever or main operating lever of the machine. The provision for advancing the paper a step at a time an equal line spacing is already in the 1890 model.

(Second) Deposition of Plaintiff's Witness Dorr E. Felt, stipulated in from Burroughs case.

R-X. Q. 510. In both the 1890 model and the roll-paper Comptograph, if the operating lever were removed from the machine the type-hammers could be recocked or set by hand, just as the machines now stand; could they not?

A. I have just inserted in both machines some paper, have applied to the back of the 1890 model, the back end of the frame, which had been taken off to facilitate examination of the parts of the machine, and I find that I cannot in any way reach the hammers so as to cock them; and even if the paper was out of both machines, and the back end of the 1890 model off, I do not quite see how I could readily get at the hammers so as to cock them.

R-X. Q. 511. With the machines just as you have left them I depress a key in the left-hand row of the 1890 model so as to release all of the type-hammers, and I ask you to observe the machine and state whether I do not readily recock the hammers without touching the operating lever.

A. I observe that you walk around to the right-hand side of the machine, reach your thumb in back of the paper-carriage, catch with the end of the thumb on the small sharp end of a little crank, and by exerting great pressure—Mr. Rector suggests that I say "giant strength"—manage to lift the hammers to their cocked position. In attempting to do the same thing myself, the first effort failed of cocking the hammers, that is, raising them to their cocked position where they would be held by the cocking pawls, although I exert sufficient pressure with my thumb to leave it stinging with pain. I try the second time and fail again. I try the third time and then succeed in cocking the hammers. This is a very different proposition from the operator printing by using the main operating lever, which is intended primarily for the purpose of cocking the hammers, to

(Second) Deposition of Plaintiff's Witness Dorr E. Felt, stipulated in from Burroughs case.

cock the hammers, and then simply taking hold of the knob provided for the purpose of feeding the paper by hand, which knob is in convenient reach of the operator when he is sitting in position to operate the keyboard and other parts of the machine and advancing the paper in its line-spacing movement thereby.

R-X. Q. 512. Do you think, Mr. Felt, that it would have required any profound thought or ingenuity on your part to have provided a little handle or operating device, within convenient reach of the operator, by means of which the swinging bail which recocks the hammer in these machines might have been readily moved by hand, if you had cared to provide for any hand-cocking of the hammers?

A. It would be a comparatively easy proposition on the roll-paper Comptograph to provide such a lever in convenient reach of the operator, because the paper being narrow a lever could have been attached directly to the hammer-shaft and still be in convenient reach of the operator without interfering with the paper. I do not quite see how to attach such a lever or provide such a means within convenient reach of the operator on the 1890 model, in such manner that it would not interfere with the travel of the paper-carriage and paper sidewise, with respect to the machine.

R-X. Q. 513. Do you consider that the "prime function" of the operating lever in the Exhibit Roll-paper Comptograph is to cock or set the hammers for printing?

A. Yes.

R-X. Q. 514. Why?

A. Because, as I said in answer to R-X. Q. 508, if the hammers were not cocked and power stored in them preparatory to printing, no printing at all could take place. With this function of the machine some printing and

(Second) Deposition of Plaintiff's Witness Dorr E. Felt, stipulated in from Burroughs case.

adding could be done by feeding the paper in its line-spacing movement by hand, and by occasionally taking hold of the ribbon spools which are located in front of the paper, from time to time, and advancing the ribbon so as to present a fresh part of the ribbon between the type and the paper. As a matter of fact, in the operation of adding and printing, nearly all the power applied to the main operating lever is utilized in cocking the hammers, and from a mere inspection of the machine it is obvious, from the construction of the lever and its relation to the other parts, that its prime function is to cock the hammers and store the power for making the printing impression.

R-X. Q. 515. Do you consider that the cocking or setting of the type-hammers in these machines is "automatic"?

Mr. MUNDAY: Objected to unless it is known what the term "automatic" means. There has been a great deal of discussion among people as to what the meaning of this term is, and I object to having that discussion imported into this case.

A. In one sense it may be so considered, but not in the same sense that the feed of the paper is automatic, which is effected by mechanism which is so connected to the hammer-operating mechanism that whenever the main operator lever of the machine is manipulated to cock the hammers the paper is automatically advanced one step without the necessity of any additional manual operation on the part of the operator other than that required to cock the hammers.

R-X. Q. 516. Is it not equally true that when the main operating lever of the machine is manipulated to advance the paper one line space or step the hammers are automatically cocked "without the necessity of any additional manual operation on the part of the operator other than that required to advance the paper?

(Second) Deposition of Plaintiff's Witness Dorr E. Felt, stipulated in from Burroughs case.

A. It is perfectly obvious that when a man is inventing and designing a machine like this, and has first got it so that it will add and print, and then he proceeds to provide some way for feeding the paper in its line-spacing movements, that if he succeeds, as I did, in tacking that mechanism onto the printing mechanism, so that it would work without the operator having to make any manual movement other than those required for the effecting of the printing, he will find that whenever he operates the main operating lever to feed the paper, or for any other purpose, the printing mechanism will also be operated in just the same way that it would before he tacked the paper-feeding mechanism onto it.

R-X. Q. 517. Will you now please answer my question, which I will ask to have reread to you?

By Mr. MUNDAY: Objected to as mere polemics.

A. I supposed that I had answered the question completely and correctly, but on a second reading I notice the word "automatically" in it. Without any definite explanation in the question as to in what sense the term "automatically" is here used, I would say that in one sense the hammers would be automatically cocked. That would be in the sense that the operator manipulated the lever for the sole purpose of advancing the paper, and without reference to any further printing to be done on the paper.

R-X. Q. 518. The word "automatic" or "automatically" was first brought into this examination by you, I believe, and I have been endeavoring to ascertain your understanding of the term or the sense in which you intended to use it, without assuming to define it myself. In the sense in which you understand and use the term "automatic" would you consider that the operation of the inking ribbon mechanism used in these machines, conse-

(Second) Deposition of Plaintiff's Witness Dorr E. Felt, stipulated in from Burroughs case.

quent upon the operation of the main operating lever is "automatic"?

A. Yes, in the sense I first used it.

R-X. Q. 519. You have explained or stated that in each of these machines the main operating lever does three things, to wit: cocks the hammers, turns the paper-feeding roll and advances the inking ribbon. Do you consider that all three of these things are "automatic" in the sense in which you understand and use that term?

By Mr. MUNDAY: Objected to as inconsequential and a mere inquisition as to the names of unimportant things.

A. I would say that the feed of the ribbon and the rotating of the paper-feeding roll were automatic in the sense I first used that term, and that the cocking of the hammers was automatic to a less degree.

R-X. Q. 520. Do the keys in your 1890 model perform any function not performed by the keys in the Exhibit Roll-paper Comptograph?

A. No.

R-X. Q. 521. Do the type-heads or sectors and the type which they carry perform any function in the 1890 model that is not performed by them in the Exhibit Roll-paper Comptograph?

A. They do not, but they perform their function in printing under conditions which were impossible in the roll-paper Comptograph.

R-X. Q. 522. Do the type-hammers in your 1890 model perform any function not performed by the type-hammers in the Exhibit Roll-paper Comptograph?

A. To this question I make the same answer I did to the last.

R-X. Q. 523. Is there any difference in the relative position and arrangement of the type-heads and type-hammers in your model and in the Exhibit Roll-paper Comptograph?

(Second) Deposition of Plaintiff's Witness Dorr E. Felt, stipulated in from Burroughs case.

A. No difference in respect to their relation to one another.

R-X. Q. 524. Is there any difference between the two machines in respect to the manner in which and the means by which the types representing the values of the operated keys are brought to the printing line?

A. No.

R-X. Q. 525. Is there any difference between the two machines in respect to the manner in which and the means by which the type-hammers are released and are thrown by their springs against the types which have been brought to the printing line?

A. No.

R-X. Q. 526. Is there any difference between the two machines in respect to the manner in which and the means by which the hammers are cocked or reset for another operation after having been so released and thrown against the type at the printing line?

A. No, the changes necessary to make in devising machines for handling wide paper left these parts functioning as before.

R-X. Q. 527. Did you superintend the making of the drawings of your 1890 model, photolithographs of which have been introduced in evidence on your re-direct examination?

A. Yes.

R-X. Q. 528. From what, if anything, in addition to your 1890 model, were those drawings made?

A. Partly from the drawings of patent No. 41,233, partly from a dismembered Comptometer like the adding mechanism in the 1890 model, and principally from the 1890 model itself; as we did not want to take the 1890 model apart so as to disclose the adding mechanism, we used the old patent and the old Comptometer to get at the details of the adding mechanism.

R-X. Q. 529. Did the draftsman who made the draw-

(Second) Deposition of Plaintiff's Witness Dorr E. Felt, stipulated in from Burroughs case.

ings have any drawings or sketches from which to work except the drawings of the patent to which you have referred?

A. No, he did not.

By Mr. RECTOR: I have no further questions to ask the witness, excepting possibly some questions concerning the correspondence which he has stated he would look up, and, if found, produce here before the close of his cross-examination. I therefore ask an adjournment until such time as the witness can have had opportunity to make the necessary search for the correspondence mentioned.

By Mr. MUNDAY: I am willing that the further examination of the witness shall be adjourned until Monday, April 6th, at 10 o'clock.

Thereupon the further taking of testimony in this cause was adjourned until Monday, April 6th, at 10 o'clock A. M.

Met Monday, April 6th, at ten o'clock in the morning, pursuant to adjournment. Present as before.

R-X. Q. 530. Have you with you this morning, Mr. Felt, any of the correspondence which you had with Mr. DeBerard with reference of the sending of your 1890 model to him at New York in 1894?

A. I have, and here it is.

By Mr. MUNDAY: The letters produced by the witness are two of them in relation to the letter to Mr. Dean heretofore referred to, and bear date in April, 1893. The remainder of the letters are dated in 1894 and relate to the sending of the machine of 1890 to Mr. DeBerard. For convenience the two first letters relating to the Dean matter have been numbered in red pencil, numbers 1 and 2, and the following seven letters relating to the 1890 machine and the shipment to New York have been lettered, respectively, A, B, C, D, E, F, G.

R-X. Q. 531. Part of the letters which you have produced, Mr. Felt, appear to be originals, and part copies, the latter being on what I suppose are the present letter

(Second) Deposition of Plaintiff's Witness Dorr E. Felt, stipulated in from Burroughs case.

heads of the Felt & Tarrant Manufacturing Company. Will you please state what these copies are or from what they were made?

A. The copies of the letters to Mr. Russell and the letters to Mr. DeBerard are copied from the letter books of that time. The letters from those two gentlemen are the originals.

R-X. Q. 532. To whom are the letters beginning "Dear Arthur" addressed?

A. To Mr. Arthur J. DeBerard, New York.

R-X. Q. 533. The last one of the letters so addressed, dated November 17, 1894, appears to be in response to some original letter not produced. Do you know what that was?

A. I don't think it is in response to any letter intervening between that and the letter of November 3. It appears to me to be an afterthought supplementing what I had already written him specifying what a machine for the Provident Institute for savings would be when made, if ordered. I could not find any other letters than those which I have brought down with me in regard to this matter.

R-X. Q. 534. Did you look for any letters to or from Mr. DeBerard subsequent to this one of November 17, 1894?

A. Yes, I did, and when I couldn't find anything, I looked for the entry of the return of the machine in the books in the shipping room where it would be entered by the one who unpacked it, and found the entry reading: "Nov. 22nd. Tabulating machine, Boston, Massachusetts", and here produce the book. The year is not noted in connection with the entry, but the book bears on its outside cover the following figures: "7/10/94".

R-X. Q. 535. Did Mr. DeBerard write you anything in respect to the return of the machine, or respecting what he did with it while he had it in the east?

(Second) Deposition of Plaintiff's Witness Dorr E. Felt, stipulated in from Burroughs case.

A. No, he did not. But it is evident that I was mistaken when I said that it was the Provident Institute for Savings in Providence. Since the machine came back from Boston it is evident that he took it to Boston and showed it to the Provident Institute for Savings, from which point he shipped it back to Chicago.

R-X. Q. 536. How did you ever learn from Mr. De Berard what he did with the machine?

A. I have never learned from Mr. DeBerard just what he did with the machine, but from the records before me, about which I have just testified, I am sure that he took it up and showed it to the Savings Bank.

R-X. Q. 537. Did you receive an order for such a machine from the bank as a result of sending the 1890 model to Mr. DeBerard and his exhibition of it to the bank?

A. No.

R-X. Q. 538. Did you ever receive any explanation from Mr. DeBerard or from the bank as to why the latter did not order a machine, after the correspondence which had been had in relation to it, and pursuant to which you sent down the 1890 model to be exhibited to the bank?

A. No. It is not usual for an agent to report why he does not make a sale in any case.

R-X. Q. 539. Then you have never known why the bank at Boston did not order one of the machines?

A. No, I have never had any definite information on the subject, but so far as knowing is concerned, I think I know all right. It is impossible, at least it was in those days, to sell an adding machine of any kind without having it to place on trial, and, of course, I wasn't going to put my model on trial.

R-X. Q. 540. Why not?

A. Well, in the first place, it was the only machine of the kind which I had, and in the second place, it didn't have any automatic answer printing, the answers on it

(Second) Deposition of Plaintiff's Witness Dorr E. Felt, stipulated in from Burroughs case.

being printed by the operator touching the keys. At the time I was making adding listing machines with answer printing. I mean the roll-paper comptograph.

R-X. Q. 541. Were you not willing to place your 1890 model on trial for the purpose of demonstrating the operation of the wide-paper carriage, in order to procure an order for such a machine?

A. No. What we wanted was orders for machines such as we were already manufacturing in a regular way, and in placing an adding machine on trial, it is not a trial of the machine. It is simply a trial to see whether or not the clerks will require sufficient skill in operating and manipulating it to demonstrate its value to the prospective purchaser. If we had gotten an order for wide-paper machine at that time, it would have cost us to make a great deal more than we would have received for it.

R-X. Q. 542. The first letter of this DeBerard correspondence which you have produced, appears to be a letter addressed to some unnamed person, and signed by "Harry Gosman," with a postscript or notation in a different handwriting, appended to it. Will you please state what that letter is, if you know?

A. This is evidently a part of a letter originally written by Harry Gosman, sub-agent of A. J. DeBerard in Boston, addressed to A. J. DeBerard in New York. Mr. DeBerard has evidently torn off a part of the original letter and sent it to me for my information after writing on it the words and figures:

"Date of July 31st, 94.

Gosman has always contended that the banks want a mach. to hold wide paper—I have merely said that his letter was referred to you—

Presume you are pretty hard pushed to give any time to anything now."

This notation is in the handwriting of Mr. A. J. De Berard.

(Second) Deposition of Plaintiff's Witness Dorr E. Felt, stipulated in from Burroughs case.

By Mr. RECTOR: I offer in evidence the DeBerard correspondence produced by the witness, the letters of which complainant's counsel has marked "A, B, C, D, E, F, G," respectively, and ask that said letters be copied into the record at this point.

By Mr. MUNDAY: I have no objection to it.

LETTER MARKED "A."

"Well, the Provident Institute for Saving have made a decision in regard to purchase of 'Graph'. They like it and just what they want provided it would carry a *sheet* (understand not a *roll*) of paper as wide as a *letter* sheet. Price is all right &c, &c and Mr. Robbuts would see that it went through the Board O. K. if it could be made to do that.

We (Mr. Brewer the Actuary and Secretary) had a long talk on the subject and we think Mr. Felt can have a machine made open at the paper feed thumb screw on the side of the machine also at the corresponding place on opposite side. Then have a loose *Roller* around which the needed sheet can be rolled or doubled and that put down in behind the Rocking paper guide on to the rollers already there the toes of the paper guide could be made to hold it then against them & it would then turn with the paper. We thought it could be done. They would like to have it done—and so would a half dozen Banks here —who would then undoubtedly buy. Surely Mr. Felt can with his ingenuity do it. I do not know if a letter from Mr. Felt saying that he expects to have something in that way soon, would make any difference or not with the Provident. You might try it. I think it policy to leave it in, don't you? You had better send me half a dozen rolls of paper. Old Colony likes their machine, also City Surveyor, Mutual Insurance and Cobb Bates & the Boston Bank begins using theirs Thursday. I go to see Rochester Brewing to-morrow. #116 has gone to Chicago.

Yours respy.

HARRY GOSMAN.

P. S. Understand that want a device to carry a *sheet* of paper, not necessarily a *roll.*"

(In different handwriting.)

(Second) Deposition of Plaintiff's Witness Dorr E. Felt, stipulated in from Burroughs case.

Date of

"JULY 21, 94.

Gosman has always contended that the banks want a machine to hold wide paper. I have merely said that his letters was referred to you. Presume you are pretty hard pushed to give any time to anything new."

LETTER MARKED "B."

"AUG. 18, 1894.

DEAR ARTHUR:—

Re Tabulating machine for the Provident Institute for Savings. If they will order one and specify exactly what they want when they say (if Gosman quotes them correctly) 'they will pay for it if the machine will do the work all right' we will make the machine for them. Of course we cannot make up a tabulating machine when we might not have another call for one for years, except on a positive order, distinctly specifying what is required; the order being subject to the condition that if the machine does not come fully up to specifications and is not mechanically perfect the bank is not obliged to accept or pay for it.

The following specifications cover what the tabulating machine will do and as we understand it meets their requirements exactly.

It is to have all the mechanisms of the Comptograph which they now have on trial, except that the paper feeding and controlling device is to be for wide paper as specified below. It is to perform all the functions of the Comptograph which they now have on trial (which is #190) and in addition to have a paper holding and feeding device for paper nine inches wide said paper feeding and holding device to enable the operator to readily and quickly bring any part of a paper nine inches wide and fifteen inches deep in front of the type ready for printing.

There is to be on the right hand side a spacing lever precisely like the one on Comptograph #190, so that every time said lever is struck the sheet of paper will be fed upwards one line, in the same manner that striking the lever on Comptograph #190 feeds the strip of paper up one line. There is to be

(Second) Deposition of Plaintiff's Witness Dorr E. Felt, stipulated in from Burroughs case.

a second spacing lever on the left hand side of the machine which will, every time it is struck, feed the paper one line or figure to the left, the same as spacing on a typewriter.

The sheet or roll of paper is to be carried in a frame or carriage which, in addition to controlling the paper by the operation of the two spacing levers just mentioned above, is free to be grasped by the hand you rapidly slide from one side to the other for the purpose of quickly bringing the paper into position for printing various columns of numbers eight figures wide on any part of a sheet of paper nine inches wide or less. There is to be on the end of this paper frame or carriage a knob by turning which the paper will be rapidly fed up or down (backward or forward). This knob corresponds to the knob on Comptograph #190 for feeding the strip of paper up or down and to serve for readily putting the paper in and for turning the paper backward to begin printing another column after completing one column. It is to print and add cross footings in a line right across the sheet, automatically printing the answer at the end of the line.

There is to be no provision for a roll of paper. This, because if a roll of paper were used it would have to be on the carriage and move with it and while it would be mechanically an easy matter to provide for it it would so add to the weight of the carriage as to make it slide so hard as to be impractical. A *wide roll* of paper has no practical advantage over a sheet because when you write one column on a portion of the end of a roll it must be turned back before you start another column by the side of the first. With a roll this winding the paper back on a roll is an awkward process, but with a sheet the other end of the sheet simply runs backward and upward and takes care of itself. Those advantages which make a continuous strip of rolled paper desirable where only one column is printed and no turning backward is necessary does not obtain where several columns are printed side by side, for the paper must be turned backward after printing each column of numbers even though it is in the machine all the time.

We are willing to contract to make a machine to

(Second) Deposition of Plaintiff's Witness Dorr E. Felt, stipulated in from Burroughs case.

the above specifications and will guarantee the machine for three years. Price $500.00. If this is not what they want they can specify exactly what they want and if it is practical so that it will reflect credit on its makers and does not cost more to make than we get for it we will make it. We must have the order in writing addressed direct to us and not verbally through Mr. Gosman.

Very truly yours,

FELT & TARRANT MFG. CO.

Dic. per D. E. FELT.

P. S. I would like to have one of the blanks on which the lists are made. It might be that the reason they insist on using a wide sheet of paper is so that they can list the checks as they come in one or two at a time according to the class to which each check belongs and the column representing its class. Of course, if they should undertake to do this they would get the total footing of the entire sheet instead of the footing for each column. If they want to obtain the footing of each column which we suppose they do they must print one column clear down and then the machine will print its total beneath it, then they can start another column, etc.''

LETTER MARKED ''C.''

NEW YORK, Oct. 2, 94.

DEAR DORR:—

What shape is your Tabulating Machine in is it so that I could work it? I got some ideas after having a talk with Provident Inst. folks at Boston.

On some of those big sheets there is nothing in the machine idea, but they have a lot of work that is not so much tabulating (that is jumping around on the machine) but it would require a carriage so that they can put several columns on a page.

I enclose a sheet marked 'A.'

They begin at col. #1 fill it full of figures, add it, carry total to top of col 2 and so on till sheet is full —merely to get a lot of figures on one sheet in convenient shape for reference.

I believe they put them in a binder or cover of some sort.

(Second) Deposition of Plaintiff's Witness Dorr E. Felt, stipulated in from Burroughs case.

They have this every day—
Another class of work is as follows:

Sheets #1 to 6 are made up and the figures are proven, I think by the book-keepers. They have a lot of these sheets say 100 and it is desired to recapitulate them. It is this recapitulation that they want to do on the machine and file that for their record.

They do not care to take say sheet # 1 and write 2765.72 in first col of the Rec. sheet, then 28.47 in second col. and

then strike total			2794.19	in third col.	
but they write			2765.72	in first	
col, then under it			1413.28	from sheet	2
"	"	"	964.11	" "	3
"	"	"	764.10	" "	4
"	"	"	764.10	" "	5
"	"	"	487.11	" "	6

and so on till they get all the Recapitulation sheet will hold and then they strike total ———

7158.42

Then starting with zero they take the second line of total from the sheets and bring it into the second col of the recapitulation sheet from top to bottom and strike total 262.14.

Then take third cols. on each sheet (which are the totals of first 2 cols) and bring them into the third col. of recapitulation sheet and at the bottom strike total 7420.56.

"The Rec sheets they use are a little larger than sheet A. The second amts are usually small—under 40.00, being interest additions.

They have a great deal of such work as they carry above one thousand accounts.

They want a machine but won't order without seeing one.

It seems to me that if I could handle the one you have no matter how it looks perhaps I could get an order out of them.

I found them very nice people to talk to.

I merely said to them that I would "think it over."

Yours truly,

A. J. DeBerard."

(Second) Deposition of Plaintiff's Witness Dorr E. Felt, stipulated in from Burroughs case.

LETTER MARKED "D."

"OCT. 9, 1894.

DEAR ARTHUR:—

Re Tabulating machine. It looks rather scrubby, but works quite well except it does not print the answers. I enclose sample of its work.

As far as I have used it the additions have been accurate, but I would not bet on them. It illustrates the idea of wide paper in first class shape, for that part of it is good. I would make it so that it is still easier to get the paper in next time, but it is good as it is. The items have to be struck from right to left, thus: $125.00. Strike 5 first then 2 and last 1. One used to the Comptograph has to practice on it a little before they can use it without forgetting and making mistakes.

I believe the chances of selling are good if you show this machine to them, for it handles the wide paper in good shape.

Yours very truly,

Dic. (Signed) D. E. FELT."

LETTER MARKED "E."

"N. Y. CITY, 10/30/94.

DEAR DORR:

As the Prov. Savys. Inst. has purchased Compt. Arthur thinks he will tackle them on the Tabulating. He says that if you think it needs some practicing on his part you are to send it here—but if not you are to write him and he will advise you when to ship it to Boston.

Yrs. truly,

F. W. DEBERARD.

LETTER MARKED "F."

"NOV. 3, 1894.

DEAR ARTHUR:—

"To put paper in the tabulating machine just drop the *bottom* of the sheet down into the slot and turn *backwards*. It will thus come square. If it does not come square or for any reason you desire to change

(Second) Deposition of Plaintiff's Witness Dorr E. Felt, stipulated in from Burroughs case.

its position in the rolls turn the little thumb screws which take the tension off of the rolls.

Touch each item *backwards*. Next time I will put the little lever which enables you to turn backwards where it will be more handy when turning the knob.

If you want to feed cross ways it is necessary to first punch back behind its retaining spring the pawl which feeds up, for when feeding cross ways both levers must be struck for each check because the left hand lever is not connected to lift the hammers. Of course in the next one I will connect both levers with the hammers and ribbon. Of course you will explain that this is just an old, rusty and rough model for use in the shop and never intended as a finished machine.

Yours very truly,

Dic. (Signed) D. E. FELT."

LETTER MARKED "G."

"Nov. 17, 1894.

DEAR ARTHUR:—

Re Provident Institution Bank tabulating machine it would print either way just like the new Comptographs. It would print the answers. It would be just like the new Comptographs except that it would use wide paper instead of roll. You have a copy of my letter in which I made specifications as to what it should be. They will give you a good idea of what it is to be.

Yours very truly.

(Signed) D. E. FELT."

By Mr. MUNDAY: The foregoing copies written in the record, it is stipulated, may be substituted for the originals.

Re-direct Examination.

R-D-Q. 543. At the time when the 1890 model machine was shipped to the New York agent for exhibition to the Provident Institute for Savings, that concern al-

(Second) Deposition of Plaintiff's Witness Dorr E. Felt, stipulated in from Burroughs case.

ready had one of your roll paper Comptographs on trial, did it not?

A. They evidently did, as the correspondence shows, in the letter marked "B."

R-D-Q. 544. Can you state from your recollection, and from this correspondence, what that roll paper Comptograph which the Provident Institute for Savings then had on trial was like and in what respects it differed from the 1890 model machine?

A. It was a roll paper machine which contained the answer printing and all the other improvements shown in my Patent No. 568,020, applied for September 10, 1894. Among the other improvements there was the provision for enabling the operator to touch the keys either from right to left or from left to right.

R-D-Q. 545. Then the fact is, that the roll paper Comptograph the Provident Institute for Savings already had on trial was a more modern machine, and in the respects you have named a better machine than the 1890 model machine, in that it would automatically print the answer and also in that the keys could be touched indifferently backward or otherwise. Is that right?

A. That is right.

R-D-Q. 546. Did you expect, when you sent this 1890 model machine down to a bank that already had one of your more modern Comptograph machines, that they would be willing to buy or accept the 1890 model machine when they had an 1894 roll paper more perfected Comptograph in their possession already? Or did you expect that they might desire a machine that would unite the good qualities of the 1890 model machine, as to the handling of sheet paper, with the good qualities of the perfected Comptograph as to the printing automatically of the answer and the handling of the keys indifferently in both directions?

(Second) Deposition of Plaintiff's Witness Dorr E. Felt, stipulated in from Burroughs case.

By Mr. RECTOR: Objected to as leading and argumentative.

A. I did not expect them to buy this 1890 model machine and would not have sold it to them if they wanted to buy it. I did think that perhaps by sending it down there they might, after seeing it, order a wide paper machine with the adding part of it like the roll paper machine they had on trial, and the wide paper part of it like the 1890 model.

R-D-Q. 547. In the letter marked "D," referring to the tabulating machine, you say: "As far as I have used it the additions have been accurate. But I would not bet on them. It illustrates the idea of wide paper in first-class shape; for that part of it is good." Why do you say that you would not bet on the additions of the 1890 model machine? Just explain what you mean by that.

A. Why, I should say from looking at the letter that I meant that I wouldn't bet on the clerks using it accurately without some one who was familiar with this 1890 model to show them how to operate it differently from what the Comptograph they had been using is operated. At this time the 1890 model was four years and nine months old, and I may have had in mind the fact that it would necessarily be more or less gummed up in that time so as to affect the adding mechanism, but I am inclined to think that more likely it had reference to the necessity for touching the keys from the right toward the left.

R-D-Q. 548. One of your roll paper Comptographs that has all of these peculiarities and disadvantages that the 1890 model machine possessed is here in evidence as "Comptograph Company's Exhibit, Roll Paper Comptograph," and that machine was in successful use for many years, was it not?

A. Yes, it was. So were others made just like it.

(Second) Deposition of Plaintiff's Witness Dorr E. Felt, stipulated in from Burroughs case.

R-D-Q. 549. In your letter to Mr. DeBerard marked "F," you say: "Of course, you will explain that this is just on old, rusty and rough model for use in the shops and never intended as a finished machine." Please explain what you meant by "finished machine." In what sense did you use that expression?

A. I meant that it wasn't polished up and made pretty like the machines we were then selling.

By Mr. MUNDAY: Counsel for the Comptograph Company here offers in evidence the following letters patent granted to Dorr E. Felt, namely: No. 465,-255, application for which was filed November 11, 1890, and the patent dated December 15, 1891; No. 568,020, application for which was filed September 10, 1894, and the patent dated September 22, 1896; No. 568,021, the application for which was filed June 14, 1895, and the patent dated September 22, 1896; No. 578,919, the application for which was filed April 3, 1896, and the patent dated March 16, 1897; No. 590,972, the application for which was filed April 28, 1897, and the patent dated October 5, 1897; No. 661,-121, the application for which was filed May 2, 1898, and the patent dated November 6, 1900; No. 441,233, application for which was filed September 28, 1889, and the patent dated November 25, 1890; No. 644,287, application for which was filed July 13, 1899, patent for which was dated February 27, 1900; No. 694,955, application filed November 19, 1900, patent dated March 11, 1902.

By Mr. RECTOR: In order that the court may have before it copies of all of Mr. Felt's patents mentioned in his examination, I offer in evidence on behalf of the defendant all the patents enumerated in X-Q. 216, with the exception of those which have just been offered in evidence by complainant's counsel.

By Mr. MUNDAY: And thereupon complainant rests its case.

(Signed) D. E. FELT.

Deposition of Plaintiff's Witness, Kurt F. Ziehm, stipulated in from Burroughs case.

[Deposition of KURT F. ZIEHM, introduced after X-Q. 193, A. of foregoing deposition of Mr. Felt.]

And thereupon Kurt F. Ziehm was produced, and being duly sworn, was examined in chief by Mr. Munday, and testified as follows:

KURT F. ZIEHM:

Q. 1. What is your name, age, residence and occupation?

A. Kurt F. Ziehm, twenty-eight years old, No. 446 Thomas street; occupation, draftsman.

Q. 2. In whose employment are you?

A. Felt & Tarrant Manufacturing Company.

Q. 3. How long have you worked there?

A. I started working for the Felt & Tarrant Manufacturing Company in 1893 and worked for them until they sold out to the Comptograph Company in 1900; I worked somewhere else for a year or two and am now again working for the Felt & Tarrant Manufacturing Company.

Q. 4. Do you know Mr. Dorr E. Felt?

A. Yes, sir, I know him since 1893.

Q. 5. I hand you a piece of mechanism and ask you if you recognize it. (Witness is handed "Comptograph Company's Exhibit, Sheet End Warning.")

By Counsel for the Universal Adding Machine Company: Counsel objects to the question as irrelevant and immaterial, for the reason that all questions relative to the inventorship of the machine in evidence as "Felt's 1890 Model," and all questions relative to its construction, operation and abandonment, and all questions relative to its improvement by the introduction of the exhibit handed the witness entitled "Sheet End Warning," are *res adjudicata* by reason of the decision of the Circuit Court of Appeals for this Circuit upon appeal from the decision

Deposition of Plaintiff's Witness, Kurt F. Ziehm, stipulated in from Burroughs case.

of the Circuit Court, and the decree that was entered in accordance with said decision in the suit of the Comptograph Company against the Universal Adding Machine Company for infringement of the Felt patent in suit. By consent this objection may stand for all subsequent questions relative to the Exhibit "Sheet End Warning," its state of construction or any other particular pertaining thereto.

A. I do.

Q. 6. State, if you know, who made it and state what it is.

A. I made it and put it on a machine for the purpose of sounding an alarm by ringing this bell when the paper is pretty nearly run out of the roll.

Q. 7. You say you put it on this machine. Do you mean the machine here present marked "Comptograph Company's Exhibit Felt's 1890 Model"?

A. It is that machine standing there. (Witness points to the Exhibit "Felt's 1890 Model.")

Q. 8. When did you make this bell "Sheet End Warning"?

A. I put that mechanism on that machine about one year or a year and a half before starting to work on Comptographs.

Q. 9. When did you start on Comptographs?

A. I started to work on Comptographs on February 7, 1898.

Q. 10. Have you any book from which you can tell more accurately when you did this work?

By Counsel for the Universal Adding Machine Company: Counsel objects to the witness being permitted to refresh his memory from any book unless it shall appear from the record that such book was kept by him personally, and the entries therein made by him contemporaneously with the events relative to which he is to refresh his memory.

A. We have a book that is kept by the foreman of

Deposition of Plaintiff's Witness, Kurt F. Ziehm, stipulated in from Burroughs case.

the shop in which all machines taken out by the various assemblers are entered. These entries are given to this foreman as the machines are taken out.

Q. 11. Have you that book here?

A. This is the book right here. (Witness produces book.)

Q. 12. On pages 17 to 21 of this book I find certain entries under your name. Please state who wrote those entries and whether they were written in your presence, and if so why they were written in your presence?

A. Mr. Kline, the foreman of the shop at that time, made these entries. They were made in my presence. The foreman of that shop, Mr. Kline, always made it a point to make these entries in the presence of the man that brought the particular machine that he was taking out in order to avoid any possible mistakes in entering them.

Q. 13. A sample entry in this book under your name is the following, which is the first entry under your name:

"7——— ———27———96———1846."

Please explain what that signifies.

A. That signifies that I took out Comptometer frame No. 1846 on that particular date, July 27, 1896, in order to put the various other mechanisms into this frame and thereby make a complete comptometer.

Q. 14. Are you able by reference to this book to state when you did the work of putting the end of sheet warning device on the exhibit Felt's 1890 model?

Counsel for Universal Adding Machine Company: Objection to Q. 10 repeated.

A. I could tell by looking through the book and pick out such intermissions in taking out Comptometer frames and could in that way tell very close.

Q. 15. You mean that there are intervals of time in-

Deposition of Plaintiff's Witness, Kurt F. Ziehm, stipulated in from Burroughs case.

dicated in the book, during which intervals of time you did not take out any Comptometer frames. Is that right?

By Counsel for Universal Adding Machine Company: Same objection.

A. That is it exactly.

Q. 16. And do you mean that it was in one of these intervals you did this work?

A. Yes, sir.

Q. 17. How long did it take you to do this work of putting the device on the machine?

A. It took about two weeks.

Q. 18. Please state what is the date from the book when an interval occurred which was the interval during which this work was done by you?

By Counsel for the Universal Adding Machine Company: Same objection.

A. It was done, as near as I can recollect, between February 10, 1897, and April 13, 1897.

Q. 19. Are you able to state what you did at each other interval, if any there be, in that book?

A. I believe that I could very clearly state what I had done during those intervals.

Cross-Examination by Counsel for the Universal Adding Machine Company.

X-Q. 20. I find upon pages 17 and 18 of the book referred to by you thirty-three entries, which, according to your testimony, relate to frames taken into your custody for the purpose of adding mechanism thereto. Upon pages 20 and 21 I find twenty-six similar entries. Each of these entries consists of a date and a number, which number you have testified is that of a machine frame. These dates cover a period from July, 1896, to December, 1898. Do you mean by your answer to Q. 19

Deposition of Plaintiff's Witness, Kurt F. Ziehm, stipulated in from Burroughs case.

that you are able to recall the particular work done by you during the intervals between the dates of all the entries referred to?

A. In my testimony I referred to the entries up to February 7, 1898, as all entries made on Comptometers, but if absolutely necessary I could account for the various intervals that took place after that period.

X-Q. 21. How are you enabled to reemmber the date upon which you started to work on Comptographs?

A. I kept a little diary of the various events that took place during my work time.

X-Q. 22. Have you this diary with you?

A. No, sir.

The reference to the witness' diary is objected to, as the same has not been submitted for inspection of counsel.

X-Q. 23. For the purpose of testing your memory I will ask you what you did in the interval between the first two dates written under your name on page 17 of the book, namely, 7-27-96 and 8-4-1896?

A. That time mentioned by you was taken up in receiving instructions on the assembling of Comptometers.

X-Q. 24. Was your work during the period covered by the thirty-three entries upon pages 17 and 18 of the book referred to by you, namely, the period from July 27, 1896, to May 28, 1897, of substantially the same character, that is, assembling or adding the mechanism to the Comptometer frames, taken out by you as shown by those entries?

A. Yes, sir, except at intervals which you will find marked in the book between certain dates. By intervals I mean where a lapse of time occurs that is more than enough to assemble a Comptometer.

X-Q. 25. Have records of this kind, that is, of the kind kept in this book, been made throughout the period from July 27, '06, to the present regarding your work?

Deposition of Plaintiff's Witness, Kurt F. Ziehm, stipulated in from Burroughs case.

A. Well, I certainly think they have. They keep a record of that kind, that is, a record of machines that are being assembled, at the present time.

X-Q. 26. Was your regular work upon the assembling of Comptometers or Comptographs interrupted upon few or numerous occasions for the purpose of doing other work?

A. I don't just understand by numerous what you mean, but I was interrupted five different times between the time I started upon Comptometers and the time that I was put on Comptographs, which was February 7, 1898. The books show that.

X-Q. 27. Was there any record kept of the dates upon which you returned Comptometers after completing your work on them?

A. That is after turning over the finished machine? No, sir, not to my knowledge. I might add that they don't do that at the present date, to my knowledge.

X-Q. 28. As I understand your testimony, the book to which you have referred contains the dates upon which you received Comptometer frames for the purpose of assembling machines. The intervals between some of these dates are longer than between others. The length of these longer intervals, as I understand, induces you to believe that you were engaged upon other work during these intervals, and it was during one of these longer periods that you state that you were working on the mechanism in evidence as "Sheet End Warning." Is this a correct statement of the idea you intend to convey?

A. I stated that I put that mechanism on there between February 10 and April 13, 1897. I also stated that there were five intervals of various lengths of time between the time I started on Comptometers and the time

Deposition of Plaintiff's Witness, Kurt F. Ziehm, stipulated in from Burroughs case.

that I started on Comptographs. I can account for all these intervals.

Cross-examination closed.

Re-direct Examination by Mr. Munday.

R-D-Q. 29. You mentioned five intervals during which your work on Comptometers was interrupted between July 27, 1896, and the time when you went to work on Comptographs. Please give the dates of those five interruptions.

A. Those dates are from October 6, 1896, to December 7, 1896; February 10, 1897, to February 25, 1897; March 26, 1897, to April 13, 1897; June 10, 1897, to July 2, 1897; November 29, 1897, to January 26, 1898.

R-D-Q. 30. What were you doing during the intervals from October 6, 1896, to December 7, 1896?

A. I believe I was assembling Comptograph parts. I remember that because I assembled similar parts before being put on Comptometers, and when the supply of those particular parts gave out I was again called upon to assemble another lot. I was riveting the answer pawls into the Comptograph pinion disk and also assembling the rest of the pinion disk.

R-D-Q. 31. What were you doing in the interval between February 10, 1897, and February 25, 1897, and the interval between March 26, 1897, and April 13, 1897?

A. I stated that between that time I put on to that machine, "Felt's 1890 Model," the paper end warning. I am not very clear as to which one of these two periods mentioned by you was the one that I put the paper end warning on that machine, but it was in one of the two.

R-D-Q. 32. What did you do in the other one of these two periods, whichever it may have been? I mean the two periods mentioned in my last question?

Deposition of Plaintiff's Witness, Kurt F. Ziehm, stipulated in from Burroughs case.

A. During one of the two periods not taken up by the putting on of the sheet end warning device, I worked on Comptograph pieces.

R-D-Q. 33. What were you doing in the period of interruption that extended from June 10, 1897, to July 2, 1897?

A. At that period I had a job, I remember it exceptionally well, because it was a tool maker's job, a job which we considered at that time something out of the ordinary. It was the job of making sample pins and studs, which had to be made very fine. We at the same time tagged these studs and gave them their respective numbers. These studs were used as samples for pins which we had manufactured out East somewhere.

R-D-Q. 34. What did you do in the interval between November 29, 1897, and January 26, 1898?

A. I also remember that interval very clearly. It also being more of a skilled mechanic's job, the kind of a job which we were all very anxious to get at that time. I at that time made partly new and partly changed and partly reinforced the Comptograph tail pieces which were made out of brass, that is the patterns were made out of brass. This was one of the first brass pattern jobs that I ever had occasion to do.

I might state in connection with that I also worked on new templets which we were getting up at the time for making sheet metal tail pieces.

R-D-Q. 35. Is there in this book anything which would enable you to state accurately when you went to work on Comptographs? If so, please state what it is.

A. Yes, sir. I could state from this book that it was either February 7th or February 8, 1898, that I was promoted to a Comptograph adjuster. I here show the date on which I took out a Comptometer frame. This date is February 7, 1898, the machine number is 2288. The fact

Deposition of Plaintiff's Witness, Kurt F. Ziehm, stipulated in from Burroughs case.

that this is crossed out with a pen line drawn through it shows me that at that time I returned the frame and did not finish assembling that machine. I think I can also show from another part of this book that it was on that date, because a man by the name of Pingel took my place when I was promoted to Comptograph adjuster.

By agreement of counsel the objection made to the witness refreshing his recollection from the memorandum book is permitted to stand to all the questions relative thereto.

Signature waived.

Adjournment taken until further notice.

Plaintiff's Exhibit "Felt & Tarrant Pamphlet," stipulated in from Burroughs case.

Page 18 of the Complainant's Exhibit Felt & Tarrant Pamphlet.

"We make a Comptograph which takes in a sheet of paper fifteen inches wide, and has a spacing lever for feeding both sideways and up and down. This form will be used largely for statistical work, census tabulation, and for computing election returns, and on certain kinds of office work. If interested in it, send for special circular which more fully describes it. The following table is a reduced fac-simile of one made on the model we now have:

33,182,875	36,822,975	38,537,462	39,480,362	33,216,625
1,551,800	846,950	746,500	638,850	1,551,800
65,384,351	67,966,081	69,857,081	78,715,081	65,552,081
11,587,400	8,177,700	6,856,100	6,155,800	11,070,200
2,414,684	2,353,739	2,352,079	2,348,915	2,353,739
2,991,360	3,072,730	2,110,730	317,610	3,016,730
2,114,500	2,566,000	22,222,000	2,389,006	2,910,000
2,349,031	2,098,201	2,098,201	2,161,340	2,135,000
2,578,250	2,578,250	2,578,250	2,578,250	2,578,250
495,900	495,900	495,900	495,900	495,900
7,651,309	7,670,427	7,670,427	7,670,427	7,670,427
394,070	394,070	394,070	394,070	394,070
20,431,827	24,314,823	32,080,186	27,445,103	22,110,848
153,127,357	159,357,846	187,998,986	170,790,714	155,061,670"

Complainant's Exhibit Felt & Tarrant Circular.

Plaintiff's Exhibit "Felt & Tarrant Circular," stipulated in from Burroughs case.

"COMPTOGRAPH TABULATING MACHINE.

33,182,875	36,822,975	38,537,462	39,480,362	33,216,625
1,551,800	846,950	746,500	638,850	1,551,800
65,384,351	67,966,081	69,857,081	78,715,081	65,552,081
11,587,400	8,177,700	6,856,100	6,155,800	11,070,200
2,414,684	2,353,739	2,352,079	2,348,915	2,353,739
2,991,360	3,072,730	2,110,730	317,610	3,016,730
2,114,500	2,566,000	22,222,000	2,389,006	2,910,000
2,349,031	2,098,201	2,098,201	2,161,340	2,135,000
2,578,250	2,578,250	2,578,250	2,578,250	2,578,250
495,900	495,900	495,900	495,900	495,900
7,651,309	7,670,427	7,670,427	7,670,427	7,670,427
394,070	394,070	394,070	394,070	394,070
20,431,827	24,314,823	32,080,186	27,445,103	22,110,848
153,127,357	159,357,846	187,998,986	170,790,714	155,061,670"

Reduced fac-simile of table made on the Comptograph Tabulating Machine.

This machine is a form of comptograph made with a paper holding and feeding device of varied and large capacity. It will take a sheet of paper 32 by 15 inches. It is particularly adapted to statistical work, compiling election returns, etc., but can be used advantageously in the accounting of railroads and other large concerns.

To illustrate the machine we will give an illustration of the manner of using it in tabulating live stock statistics.

Suppose schedules in blank, of live stock, have been sent out from the Bureau of Statistics of a state, to the local collectors of statistics of the counties, and returned to the bureau, filing in as indicated in script in sample schedule given below, and are to be put in tabular form:

Allen	County.
Horses	17,263
Cattle	69,052
Sheep	9,420
Hogs	43,208

Sample Schedule.

First, pile the schedules in alphabetical order by

Plaintiff's Exhibit "Felt & Tarrant Circular." stipulated in from Burroughs case.

names of counties, and placing sheet of paper on which table is to be compiled in the machine so that when machine is operated it will begin printing on the upper left-hand corner of paper.

Strike on the keys of the machine the number of horses indicated on the first schedule—turn schedule over, lay it aside and strike the up-feeding spacer-lever, when the amount of horses will be seen printed in its proper place on the sheet of paper, and added on the register of the machine. Then strike the number of horses indicated on the next schedule, and lay it on the first schedule; strike the spacer-lever, when the number of horses in the second schedule will be seen printed on the sheet just below the first; continue with the horses of each county until they are all printed in a column and pressing the answer printing-knob the total number of horses in the entire state will be printed beneath the column by the machine, which has automatically added them up as they were being printed.

The next step is to turn the sheet back to the starting point and after striking the spacer-lever for feeding sideways, begin with the next items on the schedules, and tabulate them in a column beside the column already made. Proceed in like manner until all the items on the schedule have been printed in their proper column, when the table will be complete.

If desired, the table can be made by printing all the items of a schedule in succession, and spacing by the sideway feeding-spacer, thus printing them in a line crossways, which will make when completed, a table just like the one tabulated by the system above described, except that the cross-footings will be obtained and printed instead of the footing of the columns. Where cross-footings are required in a table, it would be advisable to

Plaintiff's Exhibit "Felt & Tarrant Circular," stipulated in from Burroughs case.

make a table by both systems and copy the footings from one to the other.

It is not necessary to point out the advantages of this machine; they are too apparent to need repeating. All the advantages which the comptograph has over the old way of doing work, this machine has, besides several which do not obtain with the comptograph.

We do not carry these machines in stock, only making them when ordered. We show on front page a reduced fac-simile (exact size) of work done on a comptograph, which shows size of type used on both of those machines.

175,63
284,45
417,13
4,284,75
25,55

5,187,51

The tabulating machine automatically foots and prints its answers, and does all that the comptograph does except to feed paper from a roll.

We will make them to print ciphers or not, to suit purchaser.

This machine is designed and made in the highest style of the art. It is a beautiful piece of work. A photograph can be furnished to anyone who has work to do for which it is adapted.

We guarantee to keep comptograph tabulating machines in perfect working order, without charge to purchaser, for three years from date of purchase.

Price List.

Size.	Price.	Capacity.
Eight-column	$500.00	99,999,999
Ten-column	700.00	9,999,999,999

Plaintiff's Exhibit "Felt & Tarrant Circular," stipulated in from Burroughs case.

Complainant's Exhibits.

Complainant's Exhibit Drawings of the 1890 Machine here follow:

Fig. 1

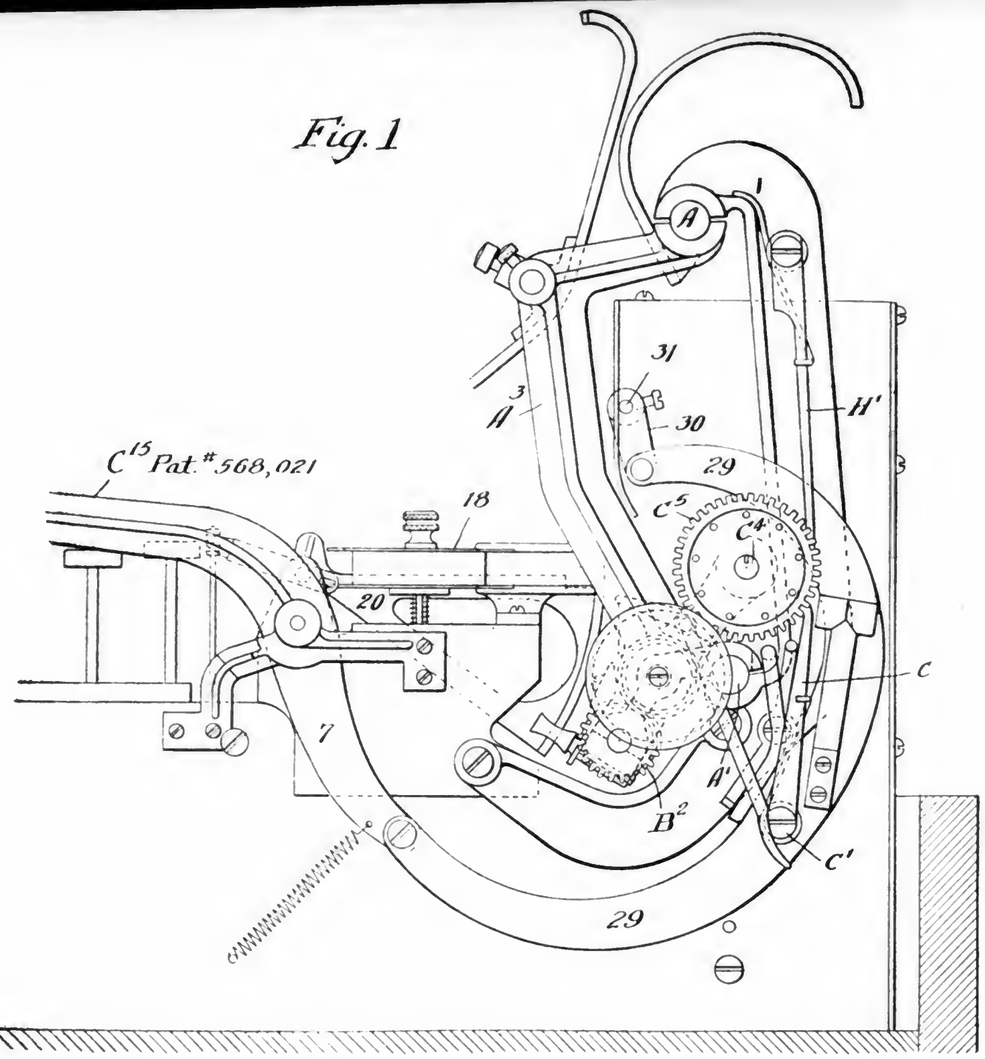

A
1
31
30
29
H'
A3
C15 Pat. # 568,021
18
20
C5
C4
C
7
A'
B2
C'
29

Fig. 5

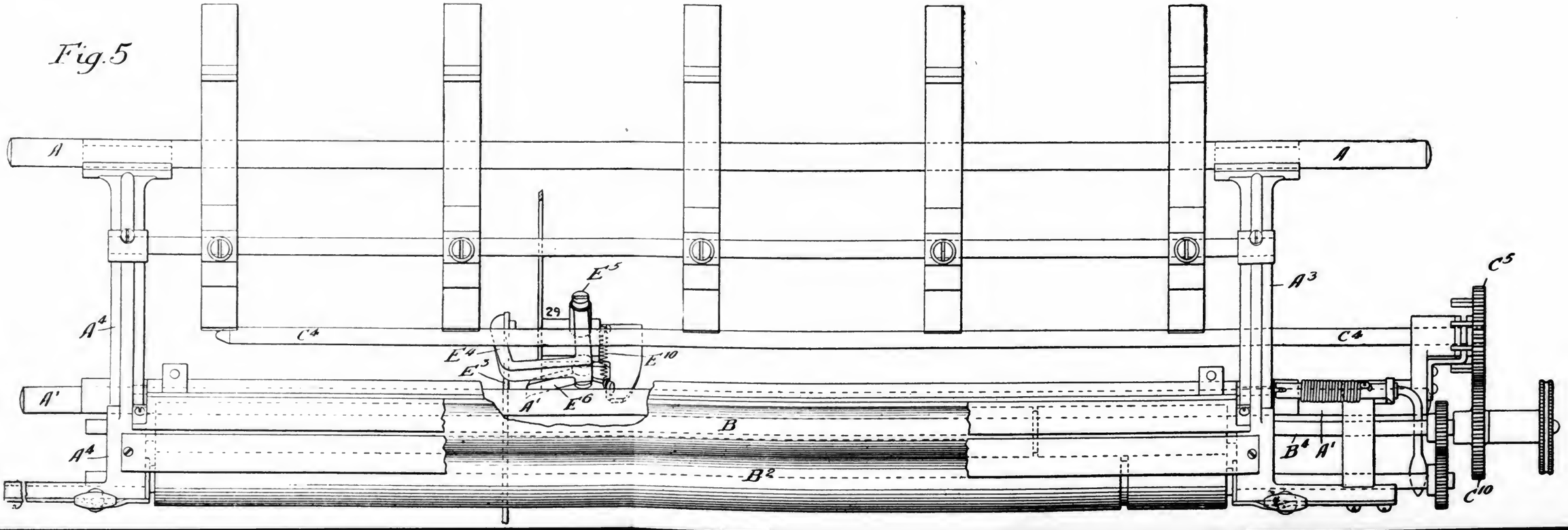

A
A
A3
C5
A4
C4
C4
E5
29
E4
E3
E10
A'
E6
A'
B
A4
B2
B4
A'
C10

Fig. 2

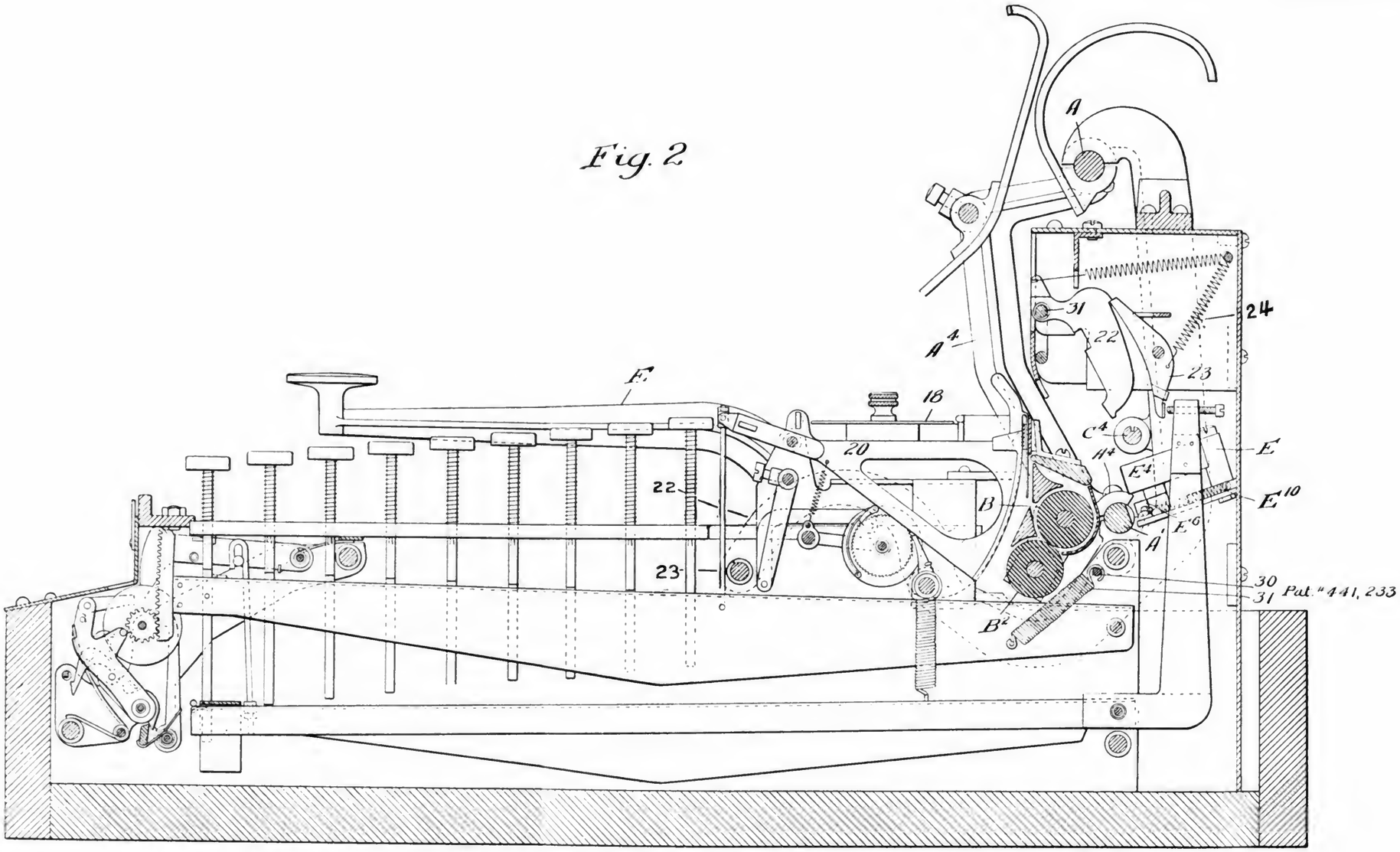

Pat. #441, 233

Fig. 7a

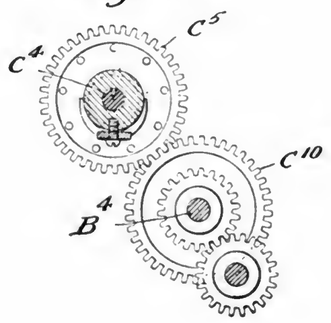

Fig. 5a

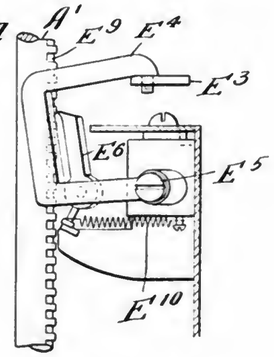

Fig. 2a

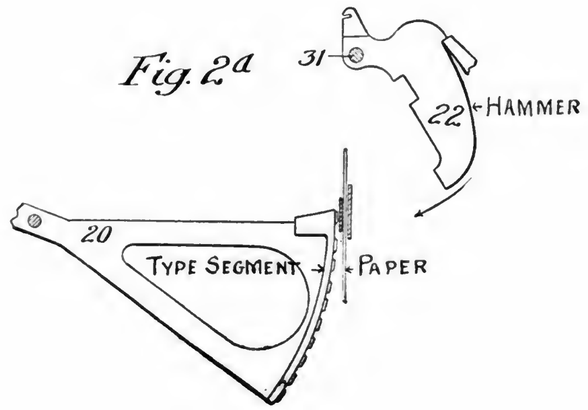

Fig. 4.

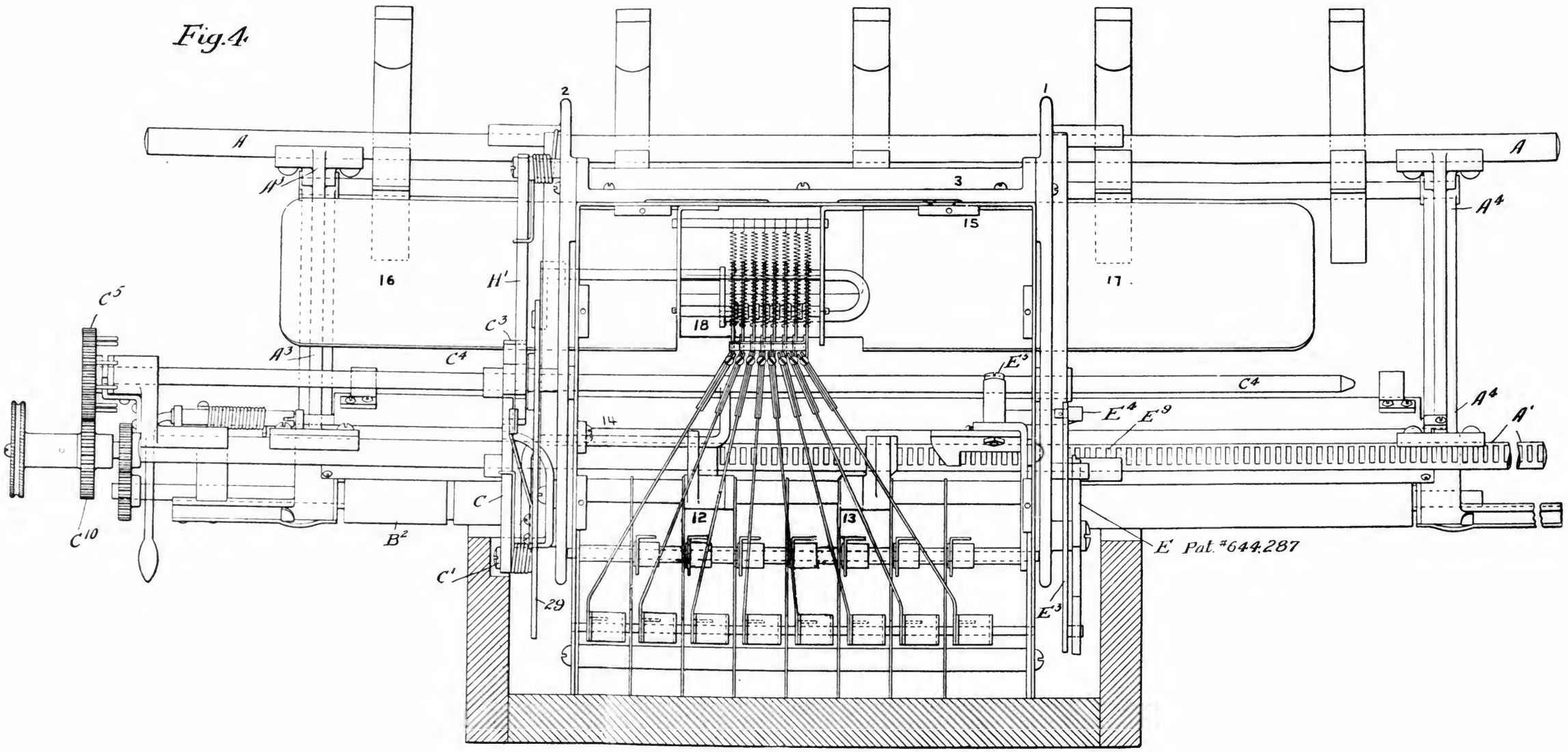

A
A
A³
A⁴
A⁴
A'
2
1
3
15
16
17
18
H'
C³
C⁴
C⁴
C⁵
C¹⁰
B²
C
C'
29
14
12
13
E⁵
E⁴
E⁹
E³
E Pat. #644,287

Fig. 7

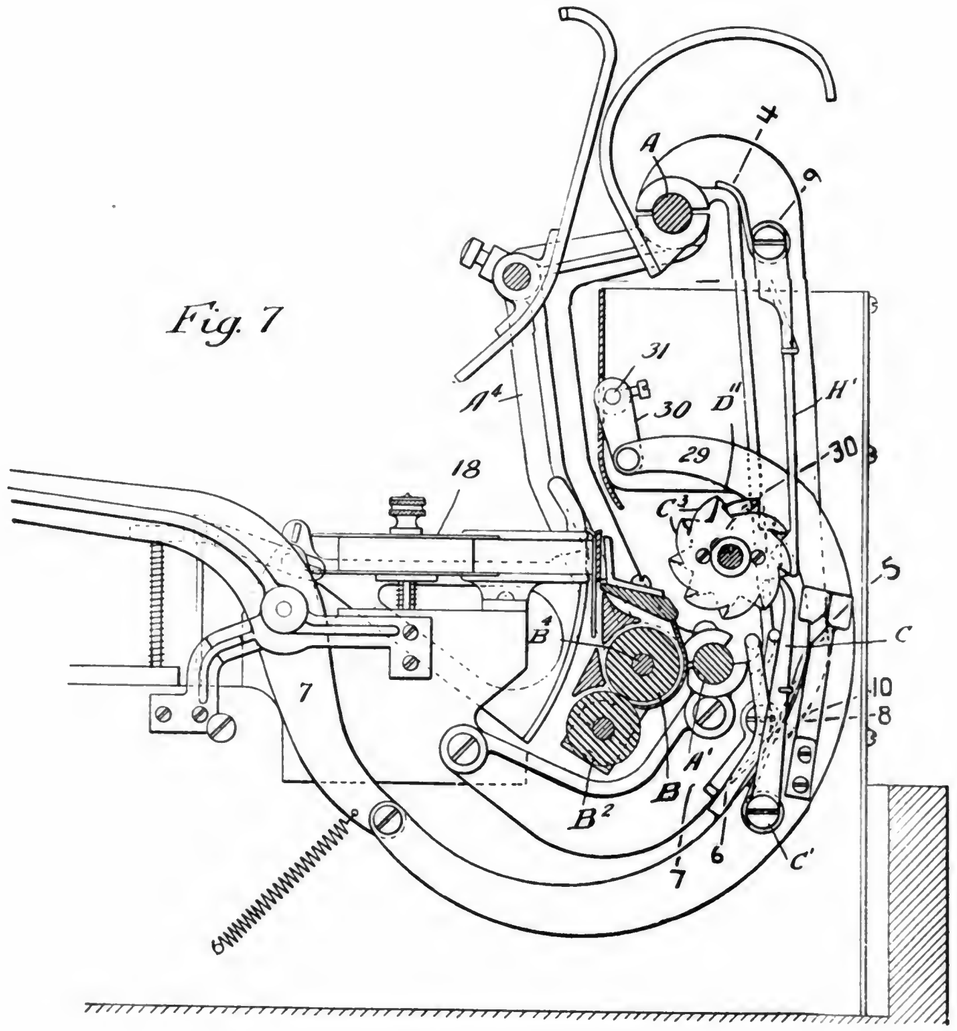
A
4
9
31
30
D''
H'
A4
29
30
18
C3
5
C
B4
10
8
7
A'
B
B2
6
7
C'

Fig. 3

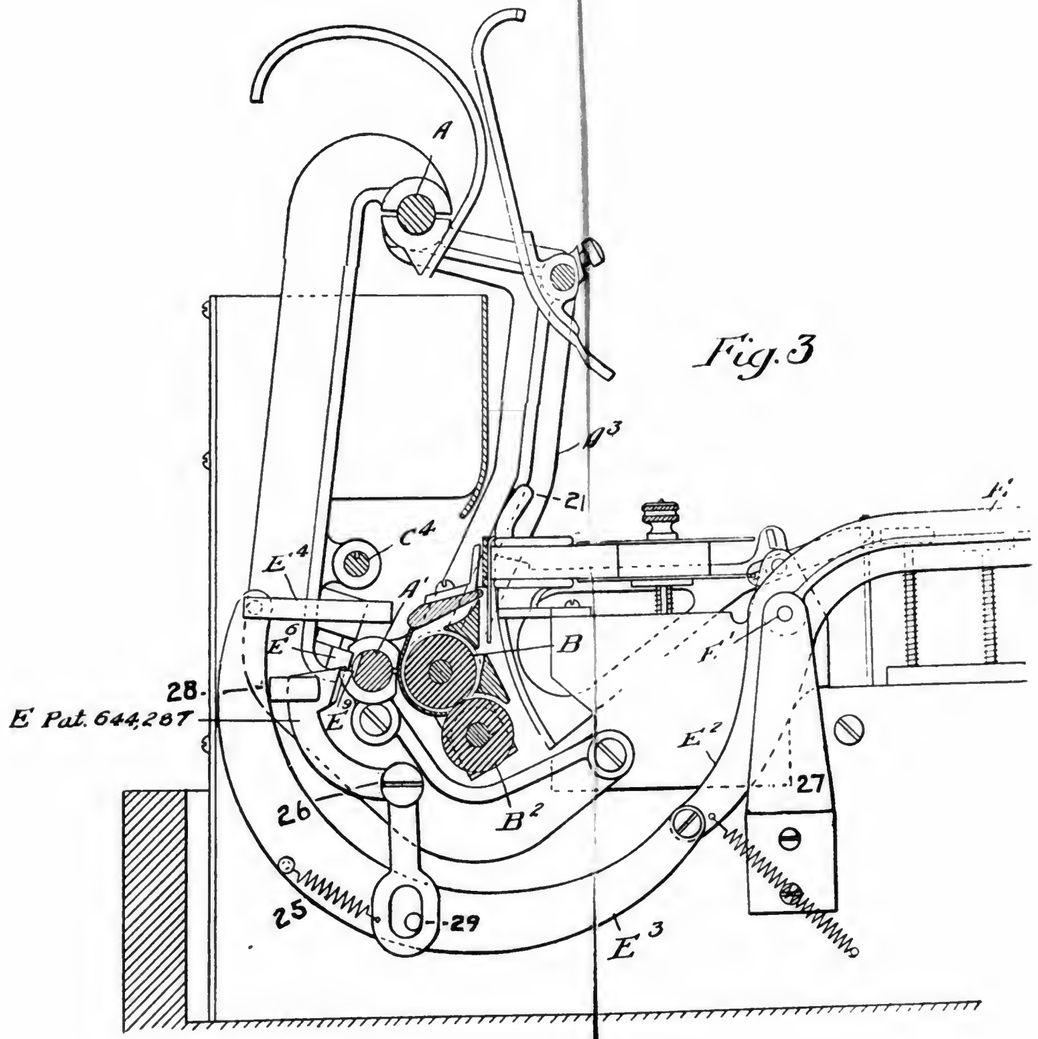
A
D3
21
C4
E4
A'
E6
B
28
E Pat. 644,287
E9
E2
27
26
B2
25
29
E3

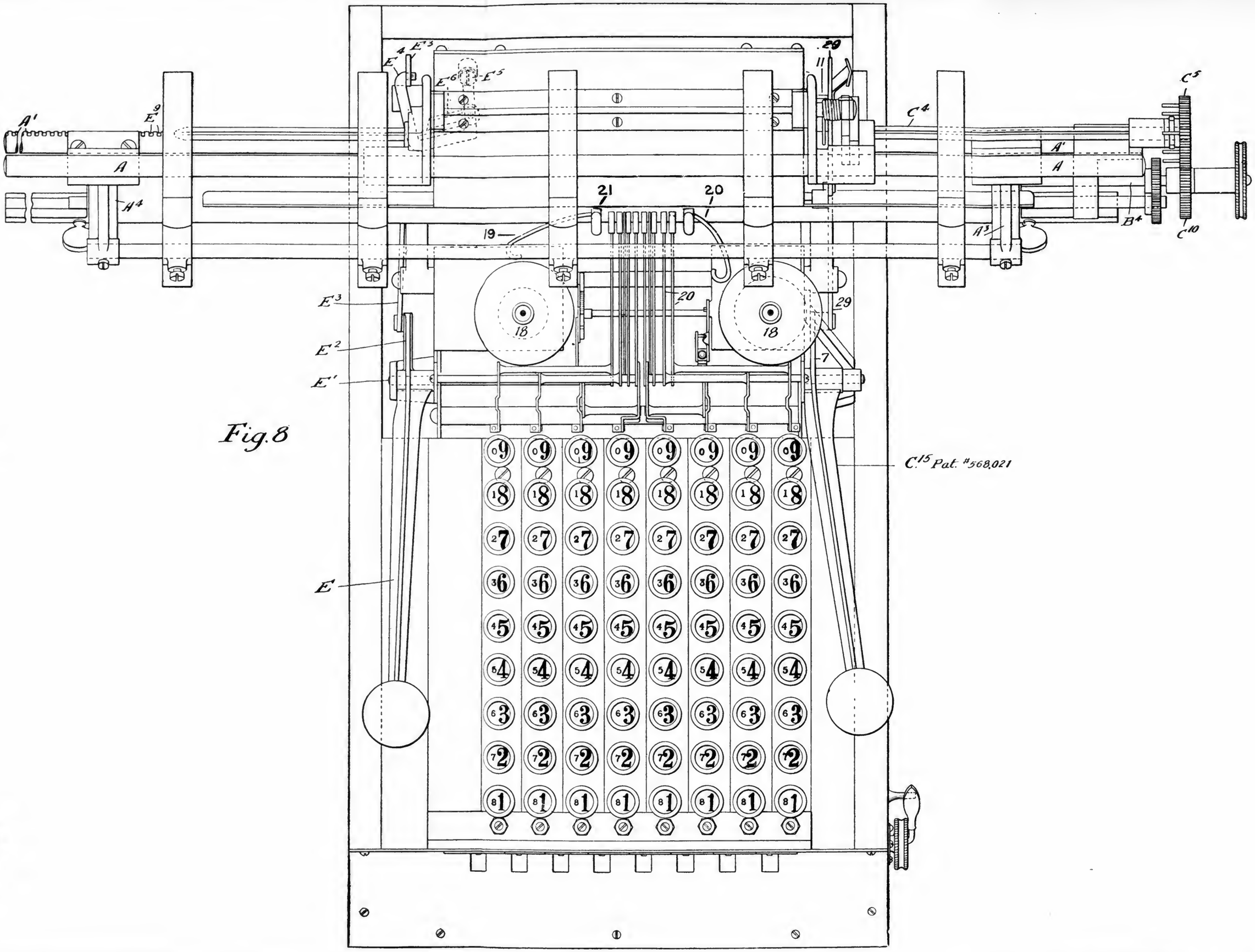
A'
E⁹
A
H⁴
E⁴
E³
E⁶
E⁵
11
20
C⁴
C⁵
C¹⁰
B⁴
A³
21
20
19
E³
E²
E'
18
18
20
29
7
E
C.15 Pat. #568,021

Fig. 8

Complainant's Rebuttal Proofs (in Burroughs Case.)

Plaintiff's Exhibit Copy of Rector Letter, stipulated in from Burroughs case.

IN THE CIRCUIT COURT OF THE UNITED STATES, NORTHERN DISTRICT OF ILLINOIS, EASTERN DIVISION.

Comptograph Company,
Complainant,
vs.
Burroughs Adding Machine Company,
Defendant.
} In Equity. No. 28,782.

Testimony on behalf of the complainant, taken under the stipulation herein, before H. M. Munday, notary public, and pursuant to the annexed notice at No. 907 Marquette Building, Chicago, Illinois, beginning at ten o'clock in the forenoon on Wednesday, September 30, 1908.

Present on behalf of the complainant, John W. Munday, Esq., and on behalf of the defendant, Edward Rector, Esq.

And thereupon Mr. Munday, on behalf of the complainant, presents a letter from Edward Rector to the American Arithmometer Company, dated January 10, 1901, said letter being in the following words:

"Law Offices of
EDWARD RECTOR,
1060 Monadnock Bldg., Chicago.
Patent and Patent Causes.
Telephone, 821 Harrison.

CHICAGO, January 10, 1901.

American Arithmometer Company,
St. Louis, Missouri.

GENTLEMEN: I enclose a letter received late yesterday afternoon from Felt & Tarrant's attorneys, which will explain itself. You will notice that they, or their clients, do not seem quite so anxious to plunge into litigation as they were a few months ago. I will make no reply to this letter at present. Perhaps the whole matter will die out if we do nothing to keep it alive.

I enclose herewith Mr. Pike's letter of November 9th last, which Mr. Langhorne left with me some time ago. He said he would write you further after he

Plaintiff's Exhibit Copy of Rector Letter, stipulated in from Burroughs case.

had received a copy of Felt's patent, and if you have heard anything from him I would like to know what he says—more particularly in respect to the date of his invention, however, than in respect to his views concerning the Felt patent.

Yours very truly,

EDWARD RECTOR."

Plaintiff's Exhibit Copy of "Pike Letter," stipulated in from Burroughs case.

Also a letter from W. H. Pike, Jr., to E. G. Langhorne, president American Arithmometer Company, dated November 9, 1900, said letter being in the following words:

"Burroughs Adding & Registering Machine Co., Ltd.
Registered Offices, 158 Arkwright St.
NOTTINGHAM, 9th November, 1900.

E. G. Langhorne, Esq.,
President American Arithmometer Co.,
St. Louis, Mo., U. S. A.

DEAR SIR: Your letter of October 24th was duly received, and I have carefully noted its contents. I have, however, not yet received the copy of the patent to Felt of July 4, 1899, so that at this time I am not able to express any definite opinion upon that particular matter.

We have here a copy of the first patent (British) to Hiett, which I presume practically corresponds to the American patent 580,863, and have copies of U. S. Patents 638,118 to Hiett and 654,181 to Rinsche.

Replying to your comment upon the latter that the 'Universal' Co. possibly considers their patent on the broad frame antedates my patent on the same device, I do not see how there can be any question of this kind, as Rinsche's patent was not applied for until April 2, 1900, issued July 24, 1900. My broad frame patent (as you know) was issued in December, 1897.

I do not know the date of the U. S. application of the earlier Hiett patent, but as the British application is of date April 20, 1897, presume the U. S. application was possibly in the latter part of 1896.

Regarding the devices for holding a sheet of paper, and means for adjusting it in both of the Hiett patents, I will point out that in neither of these is there

'a support for a sheet of paper adapted to be printed upon, and means for adjusting such support sideways to produce parallel columns.' Hiett's earlier patent shows and describes a hammer which is not movable laterally, this hammer providing a face for striking the paper and ribbon against the type, the paper being held between the two rolls which are simply feed rolls, and which are capable of a lateral movement, holding the paper between.

Plaintiff's Exhibit Copy of "Pike Letter," stipulated in from Burroughs case.

Claim 54, British patent, is on a combination of type, type hammer (common to all the type) means for moving the type, a notched shaft on which the type hammer is mounted (the hammer and the shaft remaining in a fixed position), a paper carrying frame slidingly mounted on the notched shaft, and a spring latch to engage the notches. This arrangement does not provide a support 'for a sheet of paper adapted to be printed upon.'

Claim 55 is on a combination of a notched shaft, a type hammer carried thereby, a frame mounted on the shaft, and a spring on the frame to engage the notches in the shaft. Both these claims include a type hammer on a rock shaft as one of the elements, and certainly has nothing in common with my device. This type hammer supplies the printing surface, while the moving frame simply carries the feed rolls. In the specifications there is no reference to the advantage of 'a movable support adapted to be printed upon.'

In Hiett's U. S. Patent 638,118, page 5, line 25, commences a description of a stationary platen and movable feed roll. The fact that this patent was not issued until two full years after filing the application, date Nov. 26, 1897, is, to me, an evidence of the difficulty encountered by Hiett and his attorneys in differentiating the claims from my earliest invention.

Claims 64-5-6-7 and 8 are the only ones which refer to the platen, and to moving the support laterally. The platen being stationary, the only parts movable are the paper feed rolls which are not a 'support for a sheet of paper adapted to be printed upon.' The wording of these claims has evidently been copied as nearly as possible from the wording of the claims granted to me. Hiett's patent attorneys would know

Plaintiff's Exhibit Copy of "Pike Letter," stipulated in from Burroughs case.

something about this. The only difference in construction of H's two M/S as regards the support for the paper is the earlier had a single hammer not movable sideways, which acted as a sort of platen, the latter having the platen as a sort of rigid arm. As neither of these devices accomplished what my broad frame device does, it does not appear to me that there is any infringement of ideas on my part.

The reason I have quoted the phrase, 'A support for a sheet of paper to be printed upon,' is because this describes one of the three elements in claim 1 on my broad frame device.

Rinsche patent 654,181. In claim 82 there is an attempt to differentiate Rinsche's arrangement from mine by describing the platen as being on *top* of the casing, and the type vertically movable. If the 'Burroughs' M/—was stood on its front end, this description would fit it exactly.

Claim 3 is upon the means for feeding the paper, that is to say, a ratchet upon the end of the printing roll, and a swinging arm carrying a pall.

Claim 84 is upon a support for the paper frame, means for adjusting platen to and from the type, and a lock for position.

Claims 85 to 88 are merely additional ways of describing the devices claimed in 83 and 84.

Claims 89 to 92, are upon an arrangement of ratchets and palls which may be of some use, and may not.

It seems to me to be quite plain that Rinsche's attorneys laboured hard to get a few claims on something, and the best they could do was to cover a few minor details. R's. broad frame device is an attempt to copy my invention. The reason I say this is, there is nothing in Rinsche's device which is unique and original, and which possesses advantages of practical utility over mine, but, on the other hand, is lacking in several important respects.

Regarding the question of priority of invention, after carefully considering the whole matter, I feel thoroughly justified in saying my general conception of the broad frame device dates back to about May, 1896. I am not able at this time to name the exact date when I conceived the method which I employed

Plaintiff's Exhibit Copy of "Pike Letter," stipulated in from Burroughs case.

for supporting the paper to be 'printed upon, and the means for lateral adjustment, but in its general outlines it was formed in my mind about that time. I remember quite distinctly that the question of building a broad frame device was talked over between you and soon after I was placed in charge of the factory, which was the first of February, '96. I was shown the early attempt by Mr. Burroughs, a model of which was in the stock room. This arrangement was practically an enlarged standard printing frame for rolled paper, and in general appearance something like a 'clothes-wringer.' After seeing this device I expressed myself as convinced that a better arrangement would be to have stationary supports projecting up from the base of the M/—, and providing a suitable carriage which could be moved from side to side upon ball bearings something after the manner of a typewriter carriage. My recollection is that it was intended to develop the broad frame device first, but several communications from Wyeth and Langhorne, of Chicago, during May spoke of the need of a duplicating device, and just after the tornado at St. Louis I talked with both Mr. J. T. Langhorne and Mr. Wyeth, at the factory regarding a duplicating device, and it was shortly after decided to go ahead with this first, and leave the broad frame until a little later. In the meantime, Mr. Burroughs (as you doubtless remember), had some work done upon a broad frame device, which he attempted to carry out something after the manner in which I suggested to him appeared to me as practicable.

The earliest work done on a broad frame device, more strictly according to my ideas, was, I think, in the latter part of 1896. Dorman's time cards should show the time which he worked on my device.

The first model was made according to the specifications and drawings shown in my application, but I do not remember that this M/— was ever put into actual use. The first broad frame device having a ball bearing carriage, was I think, placed with the 'St. Louis Trust Co.' in the early part of 1897; another was sent to England some time during April, and was received by you there.

I have copies of several letters from Foster &

Plaintiff's Exhibit Copy of "Pike Letter," stipulated in from Burroughs case.

Freeman to the Patent Office Examiner in charge of my application, and I quote from a letter dated Septr. 28, 1897, as follows:

> "Regarding claim 1, as pointed out during an interview had with the Examiner, applicant is absolutely the first to devise a machine by means of which *columns* of numerals may be printed *without the necessity of continually shifting the platen carriage longitudinally.* This cannot be accomplished on the Sears machine without moving the platen longitudinally after striking each key as in the ordinary typewriter. Applicant's invention is a valuable and useful one, has proved exceedingly effective in actual use, and it is thought that claim 1 is not more than commensurate in scope with the protection to which he is entitled.'
>
> My application for a patent upon a practical broad frame device appears to have been first, as during the prosecution of the case before the Examiner, we had no reference from any patents or applications in interference excepting some claims based upon special typewriter construction, wherein there was no arrangement of type arranged to print side by side. I feel sure that the contention of the 'Universal' Co. upon this point can be safely met.
>
> Upon receipt of copy of the patent to Felt, I will write you fully my impressions upon it.
>
> Yours respectfully,
>
> W. H. PIKE, JR."

By Mr. MUNDAY: I presume, Mr. Rector, that you will be able to identify your own letter, a copy of which is above given. And I hope you will also be able to identify the letter of Mr. Pike, which is above quoted and which was enclosed by you in your letter to the American Arithmometer Company, as indicated in said letter. I offer the two letters in evidence on behalf of the complainant, the copies in the record to stand for the originals.

By Mr. RECTOR: Neither of the letters which you have produced are originals, and I am therefore not able to

Plaintiff's Exhibit Copy of "Pike Letter," stipulated in from Burroughs case.

identify them by reference to the originals; but I find in my letter press copy book of January 10, 1901, a copy of a letter corresponding to the one purporting to have been written by me to American Arithmometer Company, and there can, therefore, be no doubt that such letter was written. As to the letter of November 9, 1900, from William H. Pike, Jr., to E. G. Langhorne, president of the American Arithmometer Company, I have no recollection of the contents of the letter of that date which is referred to in my letter of January 10, 1901, further than is indicated by the reference to it in my own letter. I caused a thorough search to be made for this letter in the files of the Burroughs Adding Machine Company and the American Arithmometer Company some time ago, and it could not be found. I understand that it has since turned up in the possession of the Pike Adding Machine Company, or its counsel, and that the copy which you have produced has been made from such letter now in their possession. I have no reason to doubt that the copy is correct, and that the original was the letter referred to and enclosed with my letter of January 10, 1901, to the American Arithmometer Company, but I cannot positively say whether it is or not.

(Fifth) Deposition of Plaintiff's Witness, Harry B. Wyeth, stipulated in from Burroughs case.

And thereupon, H. B. Wyeth, a former witness herein, was recalled on behalf of the complainant, and testified as follows:

Direct Examination by Mr. Munday.

Q. 1. Are you the same Harry B. Wyeth who testified for the complainant at a previous stage of this cause?

A. Yes, and I also testified for the defendant.

Q. 2. It has been estimated by a witness for the Burroughs Company, from an examination of the 1890 Felt Machine, that, to make special tools for the manufacture

(Fifth) Deposition of Plaintiff's Witness, Harry B. Wyeth, stipulated in from Burroughs case.

of the wide carriage only, of that machine, without reference to the other parts of the machine, and without reference to those parts which coact with the wide carriage, that it would cost three thousand dollars. You are an officer of the Comptograph Company, the concern which subsequently has been engaged in the manufacture of Mr. Felt's tabulator or wide carriage machine. Are you able to state how much the special tools employed by your concern for the manufacture of the wide carriage and its parts actually did cost? If so, please give the amount.

A. Our tools for making the actual pieces in the carriage of the Comptograph cost us about eight thousand dollars. To be exact, I believe the amount by our records is seven thousand eight hundred and seventy-six dollars. Of course, this includes only the pieces in the carriage and takes no account of any pieces connecting with or collateral to the carriage. It also takes no account of the fact that the machine with the wide carriage had been manufactured for some time previously and, therefore, that the tools were entirely made for all collateral pieces.

Q. 3. Are you able to state how much money has been expended by the Comptograph Company in the preparation for the manufacture and in the manufacture of the tabulator or wide carriage machine and the putting of the same on the market up to the time when the Comptograph Company first began to make a profit out of said business? If you can do so, please state the amount.

A. Probably seven hundred thousand dollars, I should say more than that sum rather than less.

Q. 4. Please state for what this expenditure was made, giving generally the items.

A. It was spent for an equipment of machinery of special tools, for material, shop rent, insurance, printed matter, a stock of parts, a stock of machines, superintendence, labor in general, clerk hire, etc.

(Fifth) Deposition of Plaintiff's Witness, Harry B. Wyeth, stipulated in from Burroughs case.

Q. 5. The Universal Adding Machine Company of St. Louis was the defendant in the test suit brought under the license contract herein. I have heard it said that the Burroughs Company, defendant herein, has bought out or joined in with the said Universal Company. What do you know about that, a thing which has occurred since the testimony for complainant was closed?

A. The Burroughs Company or individual members of its board of directors, have bought all or a large part of the stocks and bonds of the Universal Adding Machine Company. The agents of the Burroughs Company are now in many cases selling Universal machines, and the agents of the Universal Company are instructed to withdraw from competitive cases where the Burroughs Company is interested. I mean by this, competitive cases in selling machines to customers.

Q. 6. I have here Defendant's Exhibit, Machine Record Journal, purporting to contain a serial number and history of all the adding machines made and sold by the American Arithmometer Company,—the predecessor of the defendant,—down to the date at which that particular record terminates. I notice that the first seventy-four pages of this book have been carefully cut out, the pages beginning after the mutilation at 75, and the serial numbers of the machines begin at 435. Can you explain how that came to be, or give any good reason for it? If so, please do so.

A. Inasmuch as all of the early Burroughs machines were called in and destroyed, I presume that the pages of this book containing the numbers of these early machines were cut out because the machines were no longer in existence.

Q. 7. Can you give some further account of what became of these early machines and what their nature was?

A. The Burroughs Company advertise that their ma-

(Fifth) Deposition of Plaintiff's Witness, Harry B. Wyeth, stipulated in from Burroughs case.

chines were first put into use about 1892. I have here a copy of an advertisement which appeared in a magazine called "Office Appliances" of February, 1908, that gives a statement as follows:

"First in Use (1892)."

This is the first line of the ad, and the last lines give the name of the Burroughs Adding Machine Company, 67 Amsterdam avenue, Detroit, Michigan, U. S. A.

I have here also a pamphlet entitled "A Little Book About the Burroughs," same being a piece of advertising matter recently put out by the Burroughs Company. On the 11th leaf of this pamphlet,—the pages are not numbered—appears the statement:

"1891—First 150 machines recalled and destroyed by inventor."

The page on which this statement appears is headed "A Few Facts Relating to the Burroughs Adding and Listing Machine." I think the statement that one hundred and fifty machines were recalled and destroyed is probably very greatly exaggerated, for the quantity actually in existence was undoubtedly much smaller. The machines destroyed at that time, however, were of the type that Burroughs first made. They had a number of peculiar features which were found to be entirely impracticable. Among these features being the method of printing. Burroughs, in these machines, used the manner of printing shown by the inventor Pottin; that is to say, by forcing a roller or platen against the type. Pottin shows this method in U. S. patent 312,014, which was applied for in February, '84, and issued in February, 1885, having been patented in England even earlier than this, in 1883. Pottin had, instead of type, figures composed of a series of needle points, and therefore pricked his figures through his paper, instead of actually printing them. Burroughs tried what so many other inventors have tried to do since, to print with a single platen or hammer, or by forcing

(Fifth) Deposition of Plaintiff's Witness, Harry B. Wyeth, stipulated in from Burroughs case.

such platen or hammer against the type. This is a method of printing that cannot be made to work successfully with side by side printing mechanism, and therefore the early Burroughs machines had to be abandoned largely because they did not have a successful printing mechanism. The later Burroughs machines were built with the printing mechanism substantially like that which Mr. Felt devised, and which he used in the Felt 1890 model in the roll paper Comptograph,—both of which are in evidence in this suit—and which he showed in his patents issued in 1890, No. 441,233 and possibly one or two others of about the same date. This printing uses a multiplicity of hammers, one individual hammer for each individual type segment. Even these Burroughs machines, however, were later recalled, for about the year 1894, all Burroughs machines then in use were so far as possible called in and replaced. This was done principally because the machines were unsatisfactory in their operation in the adding mechanism and were unreliable in that respect. It was not until about 1895 that the Burroughs machines began to be manufactured in a way which was serviceable and more or less as they have been manufactured ever since. Generally speaking, this type of Burroughs machine is shown in later Burroughs patents issued in 1893, No. 504,963 and 505,078, respectively, applied for May 5th, 1892, and May 14th, 1892.

By Mr. MUNDAY: Complainant's counsel offers in evidence the advertisement first referred to by the witness, and asks that the same be marked "Complainant's Exhibit, Burroughs Co.'s Advertisement in Office Appliances Magazine of Feb. '08"; also the advertising pamphlet referred to by the witness, and asks that the same be marked "Complainant's Exhibit, 'Burroughs Co.'s Descriptive Advertising Pamphlet';" also the U. S. patent to Pottin, No. 312,-014, and asks that the same be marked "Complainant's Exhibit, Pottin Patent;" also the two Burroughs patents, Nos. 504,963 and 505,078, and asks

(Fifth) Deposition of Plaintiff's Witness, Harry B. Wyeth, stipulated in from Burroughs case.

that the same be marked respectively, "Complainant's Exhibit Burroughs Patent 504,963 and Burroughs Patent 505,078."

Q. 8. Will you give a brief statement of some of the reasons why the Pottin method of printing, by pressing or striking a single paten or hammer against the printing types presented by a series of side by side type wheels, adopted in the early Burroughs machines, such as the Burroughs Company advertise, were destroyed in 1891, was impracticable, while the multiple individual type-hammer printing mechanism, disclosed by Felt in his patent No. 441,233 of 1890, and adapted by Burroughs in the Burroughs Patents 504,963 and 505,078 of 1893, is a successful and practical printing mechanism for printing from side by side types.

A. A year or two since, we had occasion to make some experiments in our factory, and in the course of them, we tried out quite thoroughly, printing by forcing a platen or hammer against a series of side by side type. I found in these experiments that my previous impression as to the impracticability of such a method of printing was fully confirmed. The experiments were undertaken because our superintendent thought he could make such method work, but we found it impossible to do so, principally for two reasons. One reason was that it seemed to be impossible to make a series of type whose faces would be absolutely alike and would be presented in exactly the same line at the printing point. Consequently, when the blow was struck by a single hammer or platen, the impression would be quite irregular, since the face of one type would stand closer to the paper than would the face of the type along side of it when the blow was struck. Therefore, some of the type would not print at all, while others would perhaps be punched clear through the paper. Another reason why we could not make this method of printing work, was because of the fact that we had to give the

(Fifth) Deposition of Plaintiff's Witness, Harry B. Wyeth, stipulated in from Burroughs case.

same force to the blow of the platen or single hammer, whether one of the side by side type was presented at the printing line or several were presented. Thus, in one case, the entire force of this blow would be taken by a single type or possibly two types, while in another case, the force of the blow would be distributed over the full series of type, nine or more, side by side. In the latter case, the force of the blow would not be sufficient to give a clear impression from the full series of type, while in the former case, the force of the blow would drive the single type through the paper.

Q. 9. Would there be any further difficulties besides those you just mentioned, if the swinging platen to be struck against the series of side by side type wheels, as in the old Burroughs machine that had the Pottin printing method, were itself in any manner made laterally movable so as to present a wide sheet of paper at different lateral positions opposite the gang of type wheels, in an attempt to print parallel columns of items on such wide sheet of paper?

A. Undoubtedly, the difficulties would be very much greater. A platen wide enough to hold a sheet of paper and made to strike against the type in an effort to print parallel columns on a sheet would have to strike these type first in one position and then in another, since the type would be stationary and the platen movable across the face of the type. To say nothing of the impracticability of manipulating a heavy platen, like this would be, back and forth in a manner sufficiently delicate to give a good printing impression from very small type, there would also be the fact that the slightest irregularity in the surface of this platen would inevitably produce disastrous results when the platen was striking the type in different positions. I mean disastrous results so far as good printing is concerned. It would be impossible to overcome this objection in a practical way, in my judg-

(Fifth) Deposition of Plaintiff's Witness, Harry B. Wyeth, stipulated in from Burroughs case.

ment. Furthermore, there would be a serious difficulty from the fact that when it was desired to print at the extreme left hand of the sheet, and the platen was brought against the type for this purpose, the right-hand end of the platen would be quite without support, and thus the blow against the type would be on a diagonal. And the same would be true when printing at the right-hand edge of the paper. In other words, a movement of the platen which would give a horizontal pressure on the type when printing in the center of the paper or platen, would give a diagonal pressure when printing at either end.

Q. 10. Did the Felt "1890 Model" of his tabulator contain the multiple individual type-hammer printing mechanism?

A. It did.

Q. 11. Have the tabulators manufactured by the Burroughs Company always contained the multiple individual type-hammer printing mechanism?

A. They have.

Q. 12. I wish you would give the history so far as you know it, of the wide frame machine in the hands of the American Arithmometer Company, and the predecessor of the Burroughs Company, defendant. State briefly what you know about their doings in relation to the wide frame machine.

A. Some time in the early nineties, Mr. Burroughs was at work in an effort to attach the roll paper Burroughs machine a laterally movable carriage which would take a wide sheet of paper. His effort took the form of a roll of paper made wide enough to hold a number of columns of amounts side by side, and of a carriage frame containing a platen which moved not only laterally, but back and forth, presumably for printing. He was apparently unable to work out a successful mechanism along this line, for later the task was taken up by Mr. W. H. Pike, Jr. Mr. Pike departed from the plan of construc-

(Fifth) Deposition of Plaintiff's Witness, Harry B. Wyeth, stipulated in from Burroughs case.

tion just mentioned and finally patented a wide carriage attachment for the Burroughs machine, as shown in the Pike patent, No. 595,864, patented December 21, 1897. Machines of this type were put upon the market by the Burroughs Company in the year 1898.

Q. 13. Did you see this early machine, which is the machine which Pike in his letter speaks of as "the clothes-wringer", at any time?

A. I recall seeing this machine, I think, once, when at the factory of the American Arithmometer Company. Just when it was I saw it, I cannot definitely state.

Q. 14. Can you state whether or not the printing was done after the Pottin method with a platen to strike the gang of types, or after the Felt method with the multiple individual type hammers?

A. I cannot state definitely, for I did not examine the machine closely, but inasmuch as my recollection is that the platen moved back and forth, as well as laterally, I should judge this movement was for the purpose of printing after the form of Mr. Burroughs' earlier attempts, in imitation of the Pottin method.

Q. 15. About that time, or subsequently, did you know of any other person who was attempting to make an adding machine that would print the amounts in columns, that is to say, a tabulator? I mean, other than Mr. Felt.

A. During the years 1894 to 1898, I heard rumors of a number of parties who were attempting to adapt a wide carriage to the roll paper adding machine. The only one of these that I ever came in personal contact with, was that of a man in Cleveland, Ohio, who was repair man for the Burroughs machines in that city. Platt was his name, as I recall it, and I think the full name was C. H. Platt. Cleveland being a part of my territory, as sales agent of the Arithmometer Company, Mr. Platt at one time showed me a device which he had made for putting a wide carriage on the Burroughs machine. This

(Fifth) Deposition of Plaintiff's Witness, Harry B. Wyeth, stipulated in from Burroughs case.

device, as I recall it, took the form of a long circular frame or cylinder, probably two or three feet long, and open at the ends. He attached this to the rear of the Burroughs machine and got his sheet of paper into it by rolling it in backwards, as I recall the matter. The device was exceedingly crude and, in my judgment, clumsy and entirely impracticable.

Q. 16. What was ever done with this device, if you know?

A. So far as I know, nothing was ever done with it.

Direct examination closed.

Cross-Examination by Mr. Rector.

X-Q. 17. Mr. Wyeth, I show you a machine which I understand to be one of complainant's regular wide paper comptographs. Is this the machine, or type of machine, for the manufacture of whose wide paper carriage you say the tools cost your company eight thousand dollars?

A. It is.

By Mr. Rector: That is all.

Re-direct by Mr. Munday.

R-D-Q. 18. Did you estimate the cost of the paper return and paper lock, which devices are not on the 1890 model?

A. I did not include any of the tools for the pieces of the paper return mechanism. I probably included the tools for one piece of the paper lock mechanism, since that one piece is contained entirely within the carriage.

R-D-Q. 19. Can you give the cost of that one piece, I mean the tools of that piece, separately?

A. About four hundred dollars.

R-X-Q. 20. What is that one piece to which you refer?

A. We call it the paper feeler. It is the flat sheet

metal bar which carries the feelers or fingers that press upon the sheet of paper, and the movement of which, when the bottom of the sheet of paper is reached, throws into action the mechanism for locking the machine at the end of the sheet of paper.

(Fifth) Deposition of Plaintiff's Witness, Harry B. Wyeth, stipulated in from Burroughs case.

Adjournment taken until further notice.

HARRY B. WYETH.

CHICAGO, Ill., October 20, 1908.

10 o'clock A. M.

The parties met by consent.

Present as before.

And thereupon the following proceedings were had:

CHARLES J. DEBERARD, a witness on the part of the complainant, being first duly sworn, testified as follows:

Deposition of Plaintiff's Witness, Charles J. DeBerard, stipulated in from Burroughs case.

Direct Examination by Mr. Munday.

Q. 1. What is your name, age, residence and occupation?

A. Charles J. DeBerard; 59 years; 390 Crescent avenue, Chicago; secretary of the Felt & Tarrant Mfg. Co.

Q. 2. How long have you been connected with the Felt & Tarrant Mfg. Company?

A. Since its incorporation, 1889.

Q. 3. Do you remember about a machine for adding and tabulating numbers, that was invented by Mr. Felt and originally designed for the Census office?

A. I do.

Q. 4. It has been testified in this case by Mr. Alfred J. Doughty, the factory manager of the Burroughs Company, that a set of special tools, adapted to the manufacture of the wide-frame carriage of that Felt tabulator

Deposition of Plaintiff's Witness, Charles J. DeBerard, stipulated in from Burroughs case.

machine, would cost $3,000. Assuming that he was correct, for the moment, I ask you whether or not you know if Mr. Dorr E. Felt, of your company, would have been able, at any time between the early part of 1890, and say the first of January, 1898, to procure $3,000 for the purpose of building a set of special tools of the kind named, or for any other purpose?

A. I know that he could not.

Q. 5. Do you remember when Mr. Felt took the machine down to the Census office?

A. I do. In the early part of 1890.

Q. 6. Who went with him?

A. I did.

Q. 7. Do you know whether that machine was favorably received by the officials of the Census office or not?

A. It was.

Q. 8. Can you state why Mr. Felt did not succeed in getting orders to build some of them for the office?

A. Yes, I do know. It was because they had but recently, at that time, spent quite a large amount of money for electrical enumerating machines, and they couldn't get further appropriations for this tabulating machine.

Q. 9. Of course, you know Mr. Robert Tarrant?

A. I do.

Q. 10. What relation did he bear to the Felt & Tarrant Company at that time?

A. He was a stockholder, a member of the Board of Directors, and its Treasurer. These were his official relations with the company, and, in addition to this, he was furnishing all the money that was furnished for the promotion of the company.

Q. 11. What was the financial condition of the company at that time, and how long did that condition continue?

A. The company was largely indebted to Robert Tar-

Deposition of Plaintiff's Witness, Charles J. DeBerard, stipulated in from Burroughs case.

rant, at that time, and up to the year 1903 continued to be in his debt.

Q. 12. Well, what was Mr. Felt's condition financially at that time?

A. He was entirely dependent on the salary he received from the Felt & Tarrant Mfg. Company for his support.

Q. 13. What was that salary, do you know, in general figures?

A. From January 1, 1890, to June 11, 1892, the salary was $18 per week. From that period to December 1, 1893, it was $21 per week. From then to December 19, 1896, it was $25 per week. From then to April 8, 1899, it was $30 per week.

By Mr. RECTOR: I object to the questions and answers so far given as not in rebuttal of any proofs introduced by defendant. It is agreed that this objection may apply to further examination of the witness along the same line, without repetition.

Q. 14. Was Mr. Felt in debt to any one that you know of, and if so, to whom?

A. He was after July 1, '91, and up to 1899. July 1, 1891, his indebtedness to Robert Tarrant was $6,856.20, and his indebtedness from January 1, 1893, to the Felt & Tarrant Mfg. Company was as follows: January 1, 1893, $124.50; January 1, 1894, $267; January 1, 1895, $288; January 1, 1896, $317. This amount was reduced in 1899 to $362.

Q. 15. Do you know whether or not, prior to 1898, the Felt & Tarrant Mfg. Company made any profit by reason of the manufacture and sale of Mr. Felt's comptograph? I mean the adding and listing machines made and sold by the company.

A. I do.

Q. 16. Please state what the fact is about that?

A. They did not.

Q. 17. You are familiar with the tabulator machine

Deposition of Plaintiff's Witness, Charles J. DeBerard, stipulated in from Burroughs case.

and have been familiar with the business of making and selling adding machines for many years. I wish you would state, in round numbers, what it would cost to put the tabulator machine on the market in such manner that a profit could be made from the manufacture and sale of the machine. How much money would be required?

A. Not less than $500,000.

Q. 18. When the machine was brought back from the Census office, what was Mr. Robert Tarrant's attitude with respect to doing anything further with it?

A. He objected to its being developed and pushed.

Q. 19. Was this a positive thing with him, or how positive did he feel about it?

A. It was positive.

Q. 20. The counsel for defendant, Mr. Rector, testifies (Rec., 315) that the only information he had about the date of Mr. Felt's invention of this machine was what he obtained from the file of said patent in the Patent Office, Mr. Rector's client is now known as the Burroughs Adding Machine Company, and it or its predecessor was formerly known as the American Arithmometer Company of St. Louis, Mo. If you can do so, please state whether or not Mr. Rector, or the Burroughs Company, or the American Arithmometer Company had any early knowledge of Mr. Felt's Census Office machine or tabulator?

A. As to Mr. Rector, I do not know. Undoubtedly I know that the Burroughs Company, or the Arithmometer Company, whichever it was at that time, had that information.

Q. 21. You mean the early company?

A. I do.

Cross-Examination by Mr. Rector.

X-Q. 22. Mr. DeBerard, are you connected in any way with the Comptograph Company, complainant?

A. I am a stockholder in that corporation.

Deposition of Plaintiff's Witness, Charles J. DeBerard, stipulated in from Burroughs case.

X-Q. 23. Has that company ever paid any dividends?

A. It has not.

X-Q. 24. Do you know, and if so, are you willing to state, how much cash capital that company had invested in its business of manufacturing and selling the tabulator comptograph machine?

A. My recollection of it is that it was upwards of $70,000.

CHARLES J. DEBERARD.

Stipulation as to Record and Exhibits from Burroughs case.

IN THE SUPREME COURT
OF THE
DISTRICT OF COLUMBIA.

Comptograph Company,
Plaintiff,
vs.
Adder Machine Company,
Defendant.

In Equity.
No. 29220.

STIPULATION.

It is stipulated and agreed by and between the parties, by their respective counsel, as follows, in respect to the record in that certain case referred to in a prior stipulation of April 6, 1910, and entitled "Comptograph Company, Complainant, *vs.* Burroughs Adding Machine Company, Defendant, In Chancery, No. 28782", which case is hereinafter referred to for convenience as the "Burroughs case":—

That the plaintiff, Comptograph Company, shall and hereby does offer in evidence all of the record of testimony and exhibits offered on behalf of the complainant in the said Burroughs case, with the same force and effect as if such record of testimony and exhibits had been originally offered in the present case by the present plaintiff;

That the defendant herein, the Adder Machine Company, shall and hereby does offer in evidence all of the record of testimony and the patent exhibits and the printed copies of other paper exhibits that were offered on behalf of the defendant (Burroughs Adding Machine Company) in the aforesaid Burroughs case, with the same force and effect as if such record of testimony and exhibits had been originally offered in the present case by the present defendant;

Stipulation as to Record and Exhibits from Burroughs case.

That all portions of the printed record of the said Burroughs case hereinabove offered by the respective parties shall be reprinted as portions of the record on behalf of the respective parties in the present case, and that copies of all the patent exhibits offered in said Burroughs case shall likewise be included as parts of the record presented to the court by the respective parties in the present case;

That the physical exhibits offered on behalf of the Burroughs Company in the aforesaid Burroughs case, and not reproduced in the printed record in said case, shall be made the subject of a further stipulation or arrangement between the parties in the present case.

Dated January 2, 1912.

(Signed) MUNDAY, EVARTS, ADCOCK & CLARKE,
Counsel for Plaintiff.

(Signed) KERR, PAGE, COOPER & HAYWARD,
Counsel for Defendant.

JANUARY 31st, 1912.

Burroughs Adding Machine Co.,
Detroit, Michigan.

GENTLEMEN:—

In the case of *Comptograph Co.* v. *Adder Machine Co.*, now pending in the District of Columbia, counsel for the respective parties desire to make use of certain exhibits which were filed in the case of *Comptograph Co.* v. *Burroughs Co.*, equity No. 27,782 (filed in Chicago). Counsel in the present case in Washington have stipulated in the record in this *Comptograph* v. *Burroughs* case and we desire to secure the use (as exhibits for defendant) of certain exhibits which were introduced in the Burroughs case, as follows:

Machine Record Journal.
Sales Record Book.
Burroughs No. 1 Machine.
Burroughs No. 3 Machine.

Stipulation as to Record and Exhibits from Burroughs case.

We would appreciate it if you would make these particular exhibits available for production at the final hearing in the present suit, which final hearing will take place some time this coming April or May.

Yours very truly,

JBH/B. KERR, PAGE, COOPER & HAYWARD,
Attorneys for Defendant, Adder Co.

MUNDAY, EVARTS, ADCOCK & CLARKE,
Attorneys for Complainant, Comptograph Co.

Stipulation as to Costs of Printing Record.

SUPREME COURT OF THE DISTRICT OF COLUMBIA.

Comptograph Company,
Complainant,
vs.
Adder Machine Company,
Defendant.

In Equity.
No. 29,220.

STIPULATION.

Whereas the proofs for final hearing on behalf of each party to the above entitled suit have been commenced and concluded pursuant to the Equity Rules and plans are being made for final hearing, and whereas the rules of this court do not require the proofs and briefs to be printed, but in order to convenience both court and counsel in the review and presentation of the proofs it has been agreed between counsel to print a joint record, each party to pay the proportion of the cost that its part bears to the whole, it is

Stipulated by and between counsel for the respective parties that the finally prevailing party may tax as costs, and the other party agrees to pay, the amount expended by such prevailing party for printing its part of the record, including the amount paid for copies of patents and other paper exhibits.

Dated February 23, 1912.

(Signed) MUNDAY, EVARTS, ADCOCK & CLARKE,
Counsel for Complainant.

(Signed) KERR, PAGE, COOPER & HAYWARD,
Counsel for Defendant.